Data sheet

Electronic timer CT-MVS.21
Multifunctional with 2 c/o (SPDT) contacts

The CT-MVS.21 is a multifunctional electronic timer from the CT-S range. It provides 11 timing functions, 10 time ranges and a continuous rated control voltage that enables worldwide use regardless of the supply voltage.

All electronic timers from the CT-S range are available with two different terminal versions. You can choose between the proven screw connection technology (double-chamber cage connection terminals) and the completely tool-free Easy Connect Technology (push-in terminals).



2CDC 251 024 V0011

Characteristics

- Rated control supply voltage 24-240 V AC/DC
- Timing functions:
  ON-delay, OFF-delay with auxiliary voltage, Impulse-ON, Impulse-OFF with auxiliary voltage,
  Symmetrical ON- and OFF-delay, Flasher starting with ON or OFF, Star-delta change-over with
  impulse, Pulse former, Accumulative ON-delay, ON/ OFF-function
- 10 time ranges (0.05 s - 300 h)
- Control input with voltage-related triggering to start timing, to stop/pause timing or to select timing function
- Remote potentiometer connection
- Precise adjustment by front-face operating elements
- Screw connection technology or
  Easy Connect Technology available
- Enclosure material for highest fire protection classification
- Tool-free mounting and demounting on DIN-rail
- 2 c/o (SPDT) contacts
- 22.5 mm (0.89 in) width
- 3 LEDs for status indication

Approvals

UL 508, CAN/CSA C22.2 No.14
GL
GOST
CB scheme
CCC

Marks

CE
C-Tick

Order data

Electronic timer

Type	Rated control supply voltage	Connection technology	Time ranges	Order code
CT-MVS.21P	24-240 V AC/DC	Push-in terminals	0.05 s - 300 h	1SVR 740 020 R0200
CT-MVS.21S	24-240 V AC/DC	Screw type terminals	0.05 s - 300 h	1SVR 730 020 R0200

Accessories

Type	Description	Material	Diameter in mm	Marking	Order code
ADP.01	Adapter for screw mounting on panel				1SVR 430 029 R0100
MAR.01	Marker label				1SVR 366 017 R0100
COV.11	Sealable transparent cover				1SVR 600 805 P0000
MT-150B	Remote potentiometer 50 kΩ±20 % - 0.2 Ω, degree of protection IP66	black plastic	22.5		1SFA 611 410 R1506
MT-250B	Remote potentiometer 50 kΩ±20 % - 0.2 Ω, degree of protection IP66	chromed plastic	22.5		1SFA 611 410 R2506
MT-350B	Remote potentiometer 50 kΩ±20 % - 0.2 Ω, degree of protection IP66	chromed metal	22.5		1SFA 611 410 R3506
KA1-8029	Adaptor for reduction of 30 mm hole to 22. 5 mm	black plastic			1SFA 616 920 R8029
KA1-8030	Adaptor for reduction of 30 mm hole to 22. 5 mm	chromed metal			1SFA 616 920 R8030
SK 615 562-87	Legend plate for remote potentiometer			Symbol (see drwg. in data sheet remote potentiometer)	GJD6 155 620 R0087
SK 615 562-88	Legend plate for remote potentiometer			Skale 0 - 10	GJD6 155 620 R0088
MA16-1060	Legend plate for remote potentiometer			Skale 0 - 30	1SFA 611 940 R1060

Connection technology

Maintenance free Easy Connect Technology with push-in terminals

Type designation CT-xxS.yyP

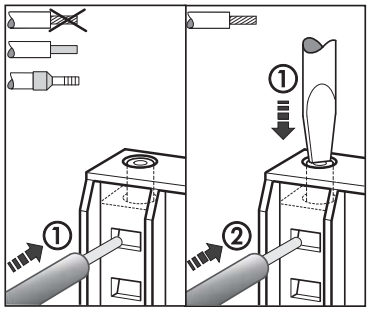

Push-in terminals

- Tool-free connection of rigid and flexible wires with wire end ferrule
  Wire size: 2 x 0.5-1.5 mm²
- Easy connection of flexible wires without wire end ferrule by opening the terminals
- Opening for testing the electrical contacting
- Gas-tight

Approved screw connection technology with double-chamber cage connection terminals

Type designation CT-xxS.yyS

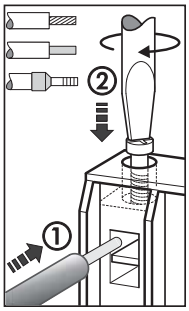

Double-chamber cage connection terminals

- Terminal spaces for different wire sizes:
  fine-strand with/without wire end ferrule:
  1 x 0.5-2.5 mm², 2 x 0.5-1.5 mm²
  rigid: 1 x 0.5-4 mm², 2 x 0.5-2.5 mm²
- Pozidrive screws for pan- or crosshead screwdrivers

Both the Easy Connect Technology with push-in terminals and screw connection technology with double-chamber cage connection terminals have the same connection geometry as well as terminal position.

Functions

Operating controls

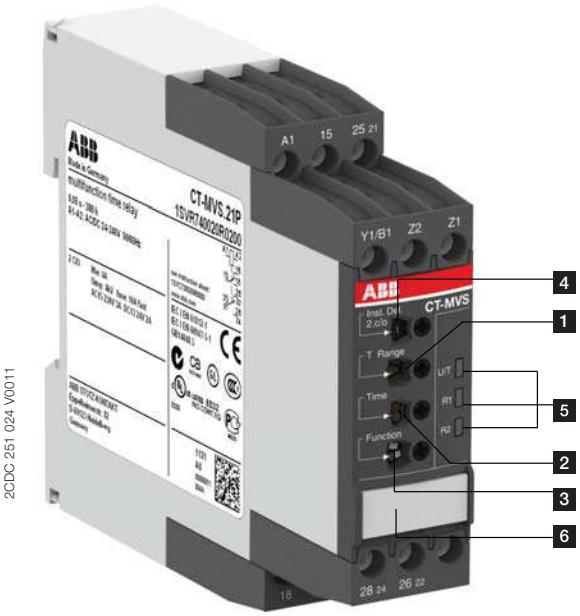

1 **Rotary switch for the preselection of the time range**

2 **Fine adjustment of the time delay**

3 **Rotary switch for the preselection of the timing function**

4 **Rotary switch to set the 2nd c/o (SPDT) contact as an instantaneous contact**

5 **Indication of operational states**

U: green LED - control supply voltage / timing

R1: yellow LED - output relay 1 energized

R2: yellow LED - output relay 2 energized

6 **Marker label**

Application

The CT-S range timers are designed for use in industrial applications. They operate over a universal range of supply voltages and a large time delay range, within compact dimensions. The easy-to-set front-face potentiometers, with direct reading scales, provide accurate time delay adjustment.

Multifunction timers are ideally suited for service and maintenance applications, because one device can replace a number of time relays with different functions, voltage and time ranges. This reduces inventory and saves money.

Operating mode

The CT-MVS.21 with 2 c/o (SPDT) contacts offers 11 timing functions. The function is rotary switch selectable on the front of the unit. Each function is indicated by an international function symbol.

One of 10 time ranges, from 0.05 s to 300 h, can be selected with an other rotary switch. The fine adjustment of the time delay is made via an internal potentiometer, with a direct reading scale, on the front of the unit. When an external potentiometer is connected to terminals Z1-Z2, the internal adjustment is disabled and external adjustment is enabled.

By means of a front-face rotary switch, the function of the 2nd c/o (SPDT) contact can be set to instantaneous contact.

Timing is displayed by a flashing green LED labelled U/T.

Examples of application

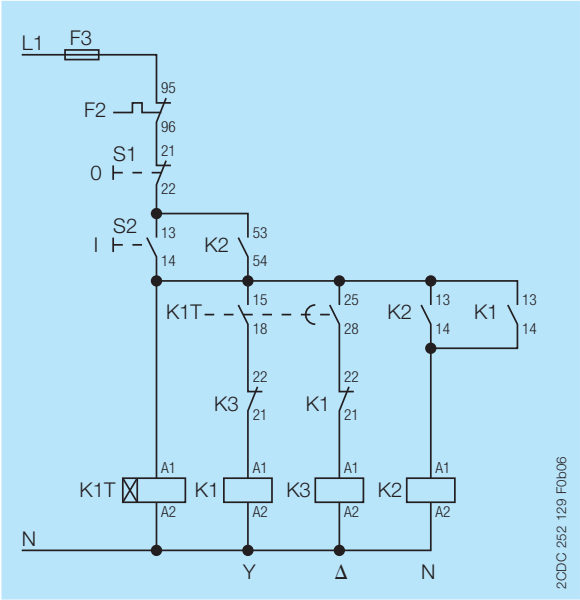

Star-delta change-over Control circuit diagram

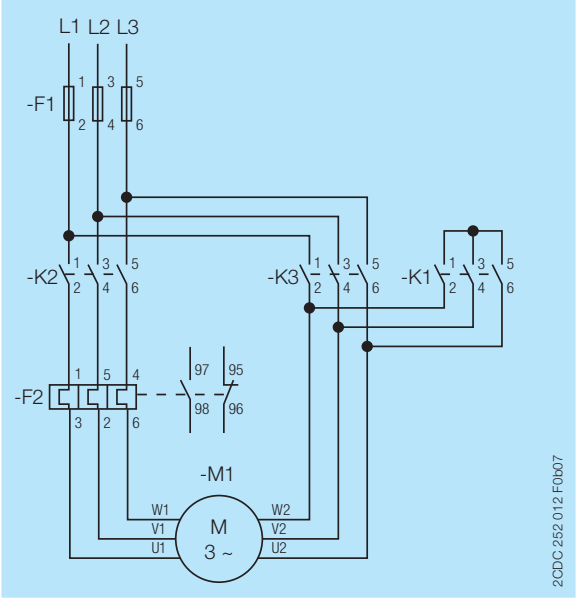

Star-delta change-over Power circuit diagram

Function diagrams

ON-delay

This function requires continuous control supply voltage for timing.

Timing begins when control supply voltage is applied. The green LED flashes during timing. When the selected time delay is complete, the output relay energizes and the flashing green LED turns steady.

If control supply voltage is interrupted, the output relay de-energizes and the time delay is reset.

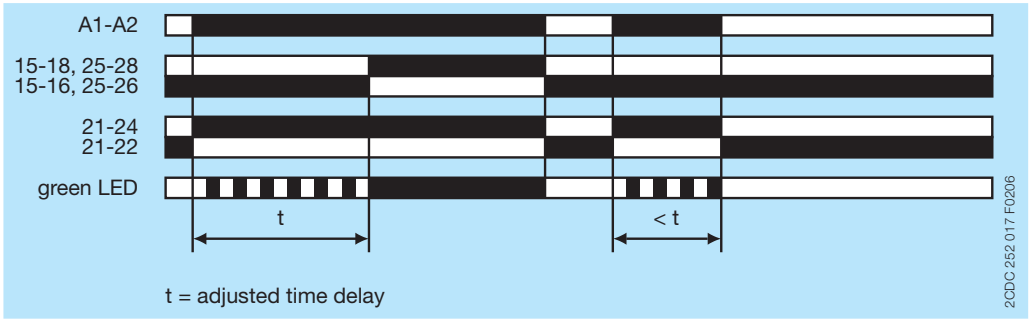

Accumulative ON-delay

This function requires continuous control supply voltage for timing.

Timing begins when control supply voltage is applied. The green LED flashes during timing. When the selected time delay is complete, the output relay energizes and the flashing green LED turns steady.

Timing can be paused by closing control input A1-Y1/B1. The elapsed time t1 is stored and continues from this time value when A1-Y1/B1 is re-opened. This can be repeated as often as required.

If control supply voltage is interrupted, the output relay de-energizes and the time delay is reset.

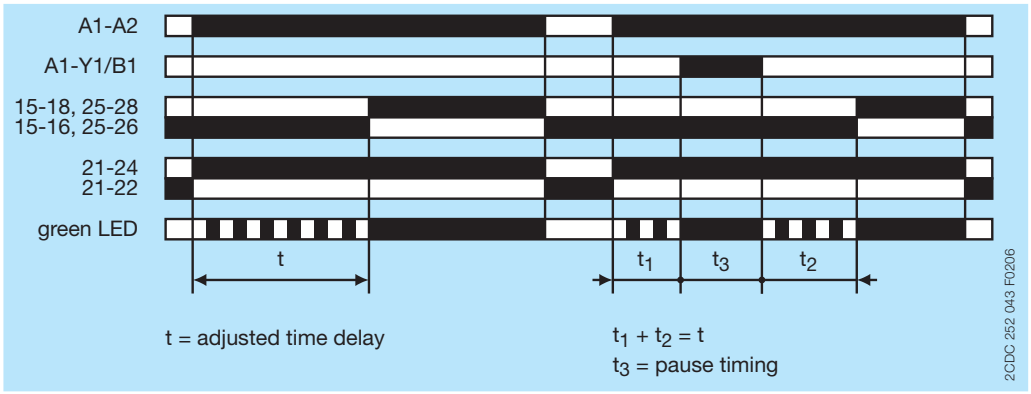

OFF-delay with auxiliary voltage

This function requires continuous control supply voltage for timing.

If control input A1-Y1/B1 is closed, the output relay energizes immediately. If control input A1-Y1/B1 is opened, the time delay starts. The green LED flashes during timing. When the selected time delay is complete, the output relay de-energizes and the flashing green LED turns steady.

If control input A1-Y1/B1 recloses before the time delay is complete, the time delay is reset and the output relay does not change state. Timing starts again when control input A1-Y1/B1 re-opens.

If control supply voltage is interrupted, the output relay de-energizes and the time delay is reset.

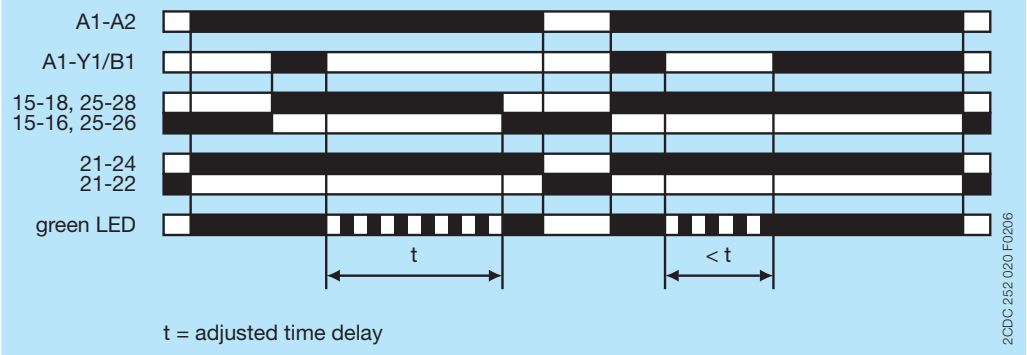

Symmetrical ON- and OFF-delay

This function requires continuous control supply voltage for timing.

Closing control input A1-Y1/B1 starts the ON-delay t1. When timing is complete, the output relay energizes. Opening control input A1-Y1/ B1 starts the OFF-delay t2. Both timing functions are displayed by the flashing green LED. When the OFF-delay t2 is complete, the output relay de-energizes.

If control input A1-Y1/B1 opens before the ON-delay t1 is complete, the time delay is reset and the output relay remains de-energized. If control input A1-Y1/B1 closes before the OFF-delay t2 is complete, the time delay is reset and the output relay remains energized.

If control supply voltage is interrupted, the output relay de-energizes and the time delay is reset.

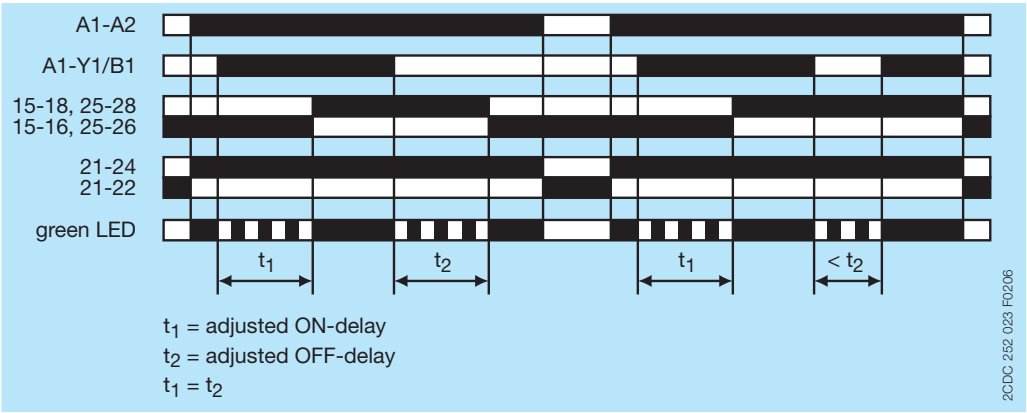

Impulse-ON

This function requires continuous control supply voltage for timing.

The output relay energizes immediately when control supply voltage is applied and de-energizes after the set pulse time is complete. The green LED flashes during timing. When the selected pulse time is complete, the flashing green LED turns steady.

If control supply voltage is interrupted, the output relay de-energizes and the time delay is reset.

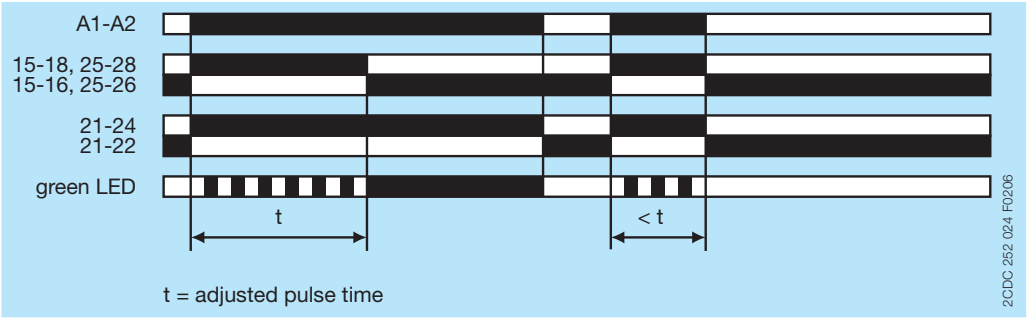

Impulse-OFF with auxiliary voltage

This function requires continuous control supply voltage for timing.

If control supply voltage is applied, opening control input A1-Y1/B1 energizes the output relay immediately and starts timing. The green LED flashes during timing. When the selected pulse time is complete, the output relay de-energizes and the flashing green LED turns steady.

Closing control input A1-Y1/B1, before the pulse time is complete, de-energizes the output relay and resets the pulse time.

If control supply voltage is interrupted, the output relay de-energizes and the time delay is reset.

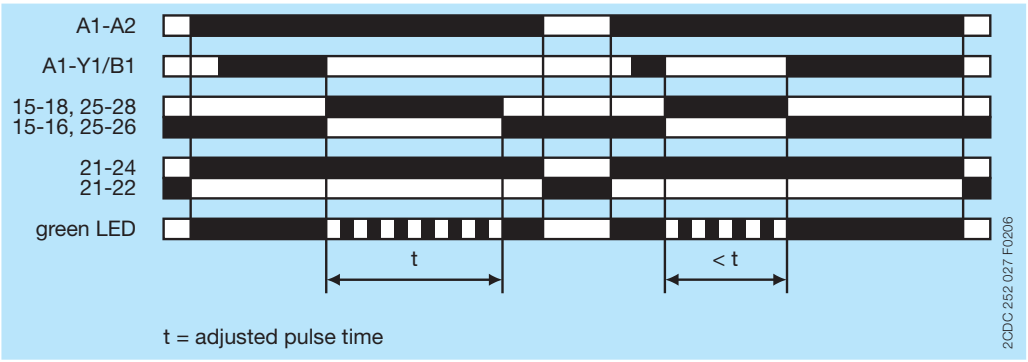

Flasher, starting with ON or OFF

Applying control supply voltage starts timing with symmetrical ON / OFF times. The cycle starts with an ON time first.

Closing control input A1-Y1/B1, with control supply voltage applied, starts the cycle with an OFF time first. The ON / OFF times are displayed by the flashing green LED, which flashes twice as fast during the OFF time.

If control supply voltage is interrupted, the output relay de-energizes and the time delay is reset.

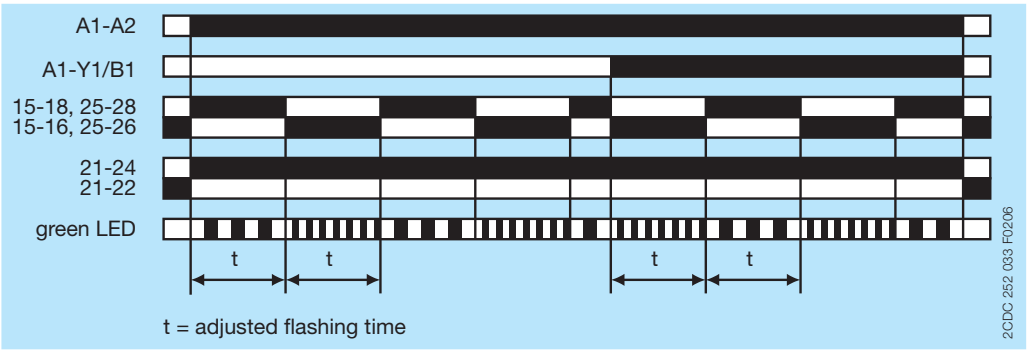

Pulse former

This function requires continuous control supply voltage for timing.

Closing control input A1-Y1/B1 energizes the output relay immediately and starts timing. Operating the control contact switch A1-Y1/B1 during the time delay has no effect. The green LED flashes during timing. When the selected ON time is complete, the output relay deenergizes and the flashing green LED turns steady. After the ON time is complete, it can be restarted by closing control input A1-Y1/B1.

If control supply voltage is interrupted, the output relay de-energizes and the time delay is reset.

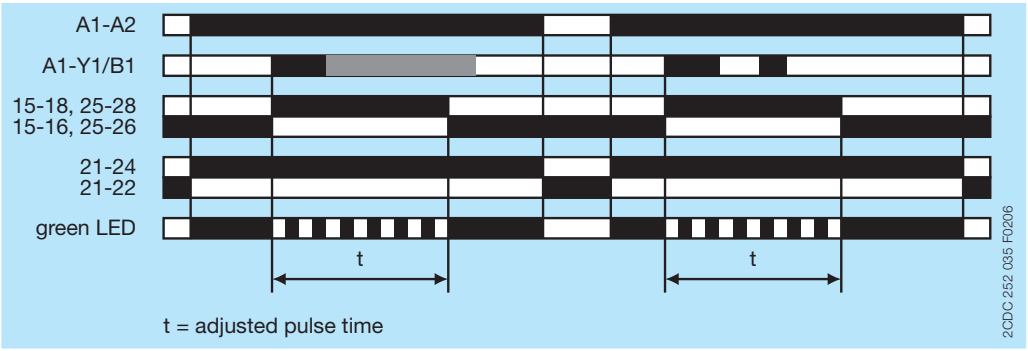

ON/OFF-function

This function is used for test purposes during commissioning and troubleshooting.

If the selected max. value of the time range is smaller than 300 h (front-face potentiometer “Time sector” not 300 h), applying control supply voltage energizes the output relay immediately and the green LED glows. Interrupting control supply voltage, de-energizes the output relay.

If the selected max. value of the time range is 300 h (front-face potentiometer “Time sector” = 300 h) and control supply voltage is applied, the green LED glows, but the output relay does not energize.

Time settings and operating of the control inputs have no effect on the operation.

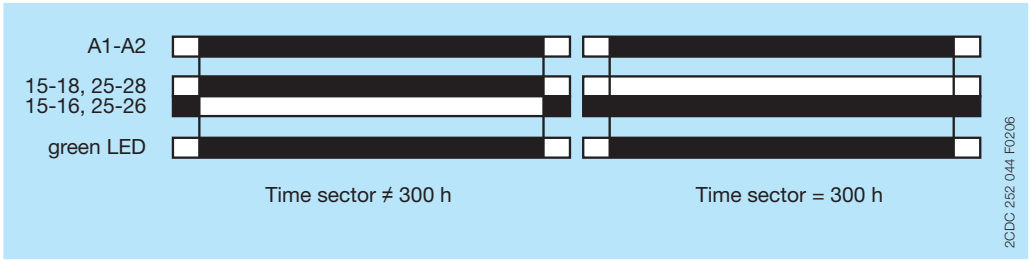

Star-delta change-over with impulse

This function requires continuous control supply voltage for timing.

Applying control supply voltage to terminals A1-A2, energizes the star contactor connected to terminals 15-18 and begins the set starting time t1. The green LED flashes during timing. When the starting time is complete, the first c/o (SPDT) contact de-energizes the star contactor.

Now, the fixed transition time t2 of 50 ms starts. When the transition time is complete, the second c/o (SPDT) contact energizes the delta contactor connected to terminals 25-28. The delta contactor remains energized as long as control supply voltage is applied to the unit.

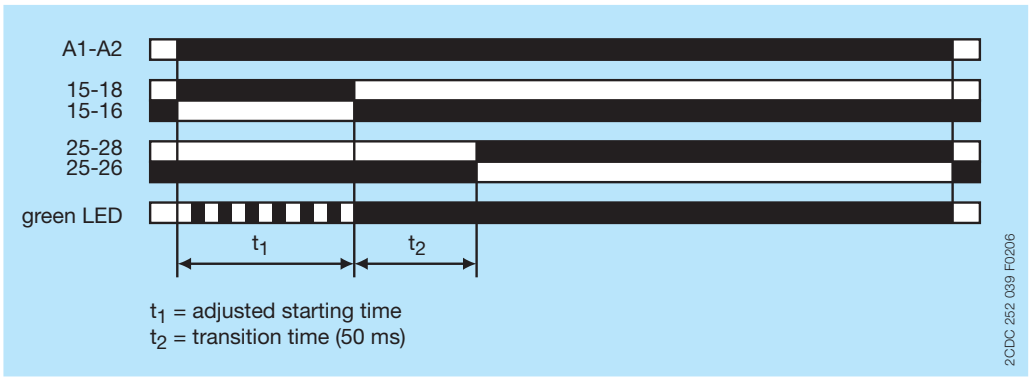

Electrical connection

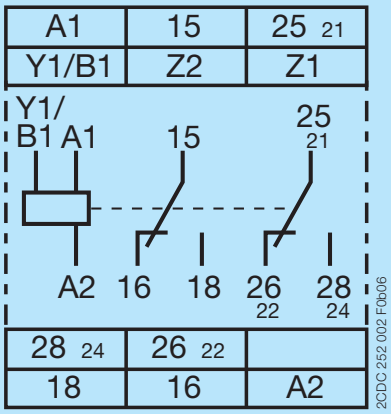

15-16/18	1. c/o (SPDT) contact
21-22/24	2. c/o (SPDT) contact as instantaneous contact
25-26/28	2. c/o (SPDT) contact
A1-A2	Rated control supply voltage U_S 24-240 V AC/DC
A1-Y1/B1	Control input
Z1-Z2	Remote potentiometer connection

Connection diagram

Wiring instructions

Control input (voltage-related triggering)

The control input Y1/B1 is triggered with electric potential against A2. It is possible to use the control supply voltage from terminal A1 or any other voltage within the rated control supply voltage range.

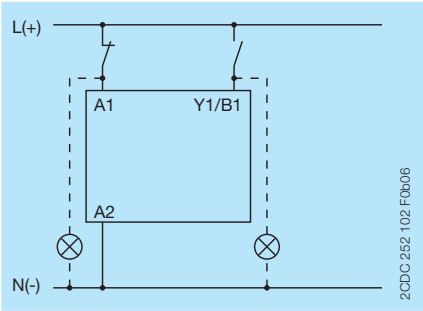

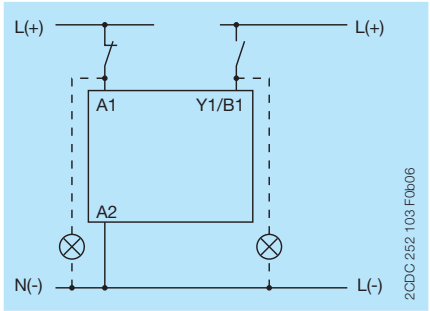

Remote potentiometer

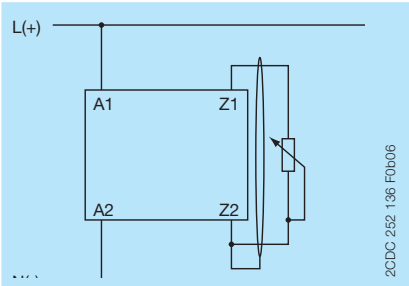

Technical data

Data at T_a = 25 °C and rated values, unless otherwise indicated

Input circuits

Supply circuit		**A1-A2**
Rated control supply voltage U_S		24-240 V AC/DC
Rated control supply voltage U_S tolerance	24-240 V AC/DC	-15...+10 %
Rated frequency	DC	n/a
	AC	50/60 Hz
Frequency range	AC	47-63 Hz
Typical current / power consumption	24 V DC	24 mA / on request
	115 V AC	12 mA / on request
	230 V AC	22 mA / on request
Power failure buffering time	24 V DC	min. 15 ms
	230 V AC	min. 20 ms

Control circuit		
Control input, control function	A1-Y1/B1	start timing external
Kind of triggering		voltage-related triggering
Restistance to reverse polarity		yes
Polarized		no
Capable for switching a parallel load		yes
Maximum cable length to the control inputs		50 m - 100 pF/m
Minimum control pulse length		20 ms
Control voltage potential		see rated control supply voltage U_S
Current consumption of the control input	24 V DC	1.2 mA
	230 V AC	8 mA
Remote potentiometer connection	Z1-Z2	50 kΩ
Maximum cable length to the control inputs		2 x 25 m, shielded with 100 pF/m
Shield connection		Z2

Timing circuit		
Kind of timer	Multifunction timer	ON-delay OFF-delay with auxiliary voltage Impulse-ON Impulse-OFF with auxiliary voltage Symmetrical ON- and OFF-delay Flasher, starting with ON or OFF Star-delta change-over Pulse former Accumulative ON-delay ON/OFF-function
Time ranges 0.05 s - 300 h		0.05-1 s, 0.15-3 s, 0.5-10 s, 1.5-30 s, 5-100 s, 15-300 s, 1.5-30 min, 15-300 min, 1.5-30 h, 15-300 h
Recovery time		< 50 ms
Repeat accuracy (constant parameters)		Δt <± 0.2 %
Accuracy within the rated control supply voltage tolerance		Δt < 0.004 %/V
Accuracy within the temperature range		Δt < 0.03 %/°C
Star-delta transition time		fixed, 50 ms
Star-delta transition time tolerance		± 2 ms

User interface

Indication of operational states		
Control supply voltage / timing	U/T: green LED	⎍: control supply voltage applied
	U/T: green LED	⎍⎍⎍: timing
Relay status	R1: yellow LED	⎍: output relay 1 energized
	R2: yellow LED	⎍: output relay 2 energized

Output circuits

Kind of output	15-16/18	Relay, 1 c/o (SPDT) contact
	25-26/28	Relay, 2. c/o (SPDT) contacts
	25(21)-26(22)/28(24)	Relay, 2. c/o (SPDT) contact selectable as instantaneous contact
Contact material		Cd-free
Rated operational voltage U_e		250 V
Minimum switching voltage / Minimum switching current		12 V / 10 mA
Maximum switching voltage / Minimum switching current		see 'Load limit curves' on page 15
Rated operational current I_e (IEC/EN 60947-5-1)	AC12 (resistive) at 230 V	4 A
	AC15 (inductive) at 230 V	3 A
	DC12 (resistive) at 24 V	4 A
	DC13 (inductive) at 24 V	2 A
AC rating (UL 508)	utilization category (Control Circuit Rating Code)	B 300
	max. rated operational voltage	300 V AC
	max. continuous thermal current at B 300	5 A
	max. making / breaking apparent power at B 300	3600/360 VA
Mechanical lifetime		30 x 10^6 switching cycles
Electrical lifetime	AC12, 230 V, 4 A	0.1 x 10^6 switching cycles
Maximum fuse rating to achieve short-circuit protection (IEC/EN 60947-5-1)	n/c contact	6 A fast-acting
	n/o contact	10 A fast-acting

General data

MTBF		on request
Duty time		100 %
Dimensions (W x H x D)	product dimensions	22.5 x 85.6 x 103.7 mm (0.89 x 3.37 x 4.08 in)
	packaging dimensions	97 x 109 x 30 mm (3.82 x 4.29 x 1.18 in)
Weight	net weight	
	gross weight	
Mounting		DIN rail (IEC/EN 60715), snap-on mounting without any tool
Mounting position		any
Minimum distance to other units	vertical	not necessary
	horizontal	not necessary
Degree of protection	enclosure	IP50
	terminals	IP20

Electrical connection

		Screw connection technology	Easy Connect Technology (Push-in)
Wire size	fine-strand with wire end ferrule	1 x 0.5-2.5 mm² (1 x 20-14 AWG) 2 x 0.5-1.5 mm² (2 x 20-16 AWG)	2 x 0.5-1.5 mm² (2 x 20-16 AWG)
	fine-strand without wire end ferrule	1 x 0.5-2.5 mm² (1 x 20-14 AWG) 2 x 0.5-1.5 mm² (2 x 20-16 AWG)	2 x 0.5-1.5 mm² (2 x 20-16 AWG)
	rigid	1 x 0.5-4 mm² (1 x 20-12 AWG) 2 x 0.5-2.5 mm² (2 x 20-14 AWG)	2 x 0.5-1.5 mm² (2 x 20-16 AWG)
Stripping length		8 mm (0.32 in)	
Tightening torque		0.6 - 0.8 Nm (5.31 - 7.08 lb.in)	-

Environmental data

Ambient temperature ranges	operation	-40...+60 °C
	storage	-40...+85 °C
Damp heat, cyclic (IEC/EN 60068-2-30)		6 x 24 h cycle, 55 °C, 95 % RH
Vibration, sinusoidal (IEC/EN 60068-2-6)	functioning	40 m/s², 10-58/60-150 Hz
	resistance	60 m/s², 10-58/60-150 Hz, 20 cycles
Vibration, seismic (IEC/EN 60068-3-3)	functioning	20 m/s²
Shock, half-sine (IEC/EN 60068-2-27)	functioning	100 m/s², 11 ms, 3 shocks/direction
	resistance	300 m/s², 11 ms, 3 shocks/direction

Isolation data

Rated insulation voltage U_i	output circuit 1 / output circuit 2	300 V
	input circuit / output circuit	500 V
Rated impulse withstand voltage U_{imp} between all isolated circuits (IEC/EN 60664-1, VDE 0110)		4 kV; 1.2/50 µs
Power-frequency withstand voltage test between all isolated circuits (test voltage)		routine test: 2.0 kV; 50 Hz, 1 s type test: 2.5 kV; 50 Hz, 1 min
Basic insulation (IEC/EN 61140)	input circuit / output circuit	500 V
Protective separation (IEC/EN 61140; IEC/EN 50178; VDE 0106 part 101 and part 101/A1)	input circuit / output circuit	250 V
Pollution degree (IEC/EN 60664-1, VDE 0110)		3
Overvoltage category (IEC/EN 60664-1, VDE 0110)		III

Standards

Product standard	IEC 61812-1, EN 61812-1 + A11, DIN VDE 0435 part 2021
Low Voltage Directive	2006/95/EC
EMC Directive	2004/108/EC
RoHS Directive	2002/95/EC

Electromagnetic compatibility

Interference immunity to		IEC/EN 61000-6-1, IEC/EN 61000-6-2
electrostatic discharge	IEC/EN 61000-4-2	Level 3, 6 kV / 8 kV
radiated, radio-frequency, electromagnetic field	IEC/EN 61000-4-3	Level 3, 10 V/m (1 GHz) / 3 V/m (2 GHz) / 1 V/m (2.7 GHz)
electrical fast transient / burst	IEC/EN 61000-4-4	Level 3, 2 kV / 5 kHz
surge	IEC/EN 61000-4-5	Level 4, 2 kV A1-A2
conducted disturbances, induced by radio-frequency fields	IEC/EN 61000-4-6	Level 3, 10 V
harmonics and interharmonics	IEC/EN 61000-4-13	Level 3
Interference emission		IEC/EN 61000-6-3, IEC/EN 61000-6-4
high-frequency radiated	IEC/CISPR 22, EN 55022	Class B
high-frequency conducted	IEC/CISPR 22, EN 55022	Class B

Technical diagrams

Load limit curves

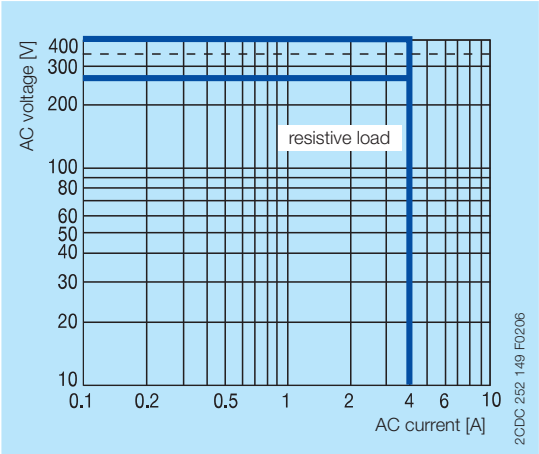

AC load (resistive)

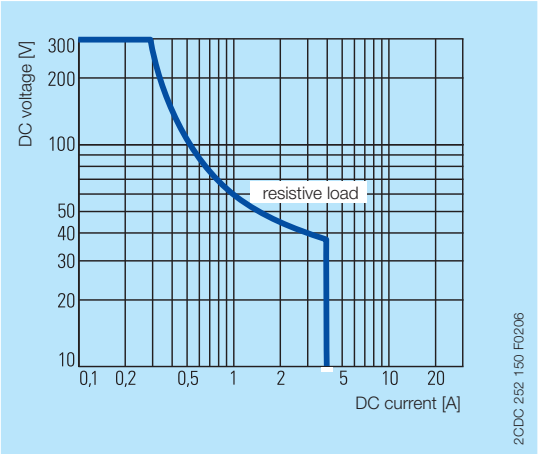

DC load (resistive)

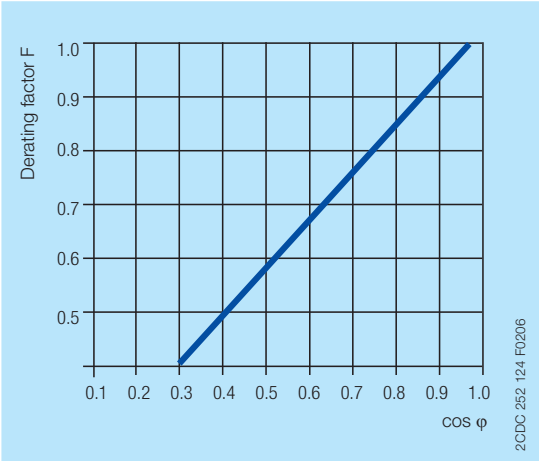

Derating factor F for inductive AC load

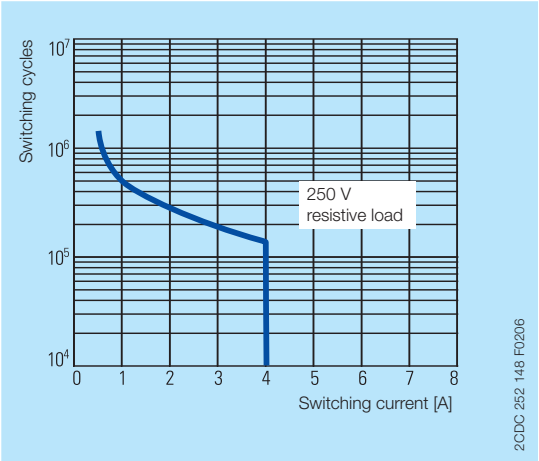

Contact lifetime

Dimensions

in **mm** and *inches*

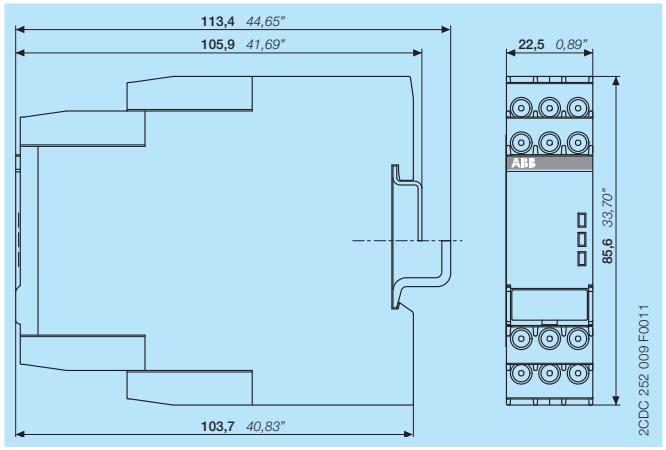

Accessories

in **mm** and *inches*

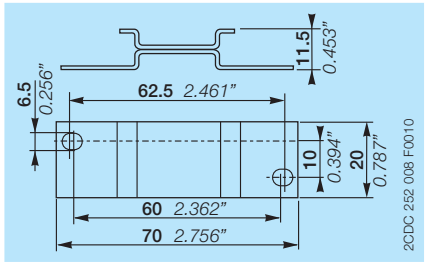

ADP.01 - Adapter for screw mounting

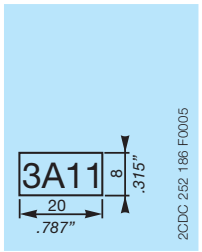

MAR.01 - Marker label

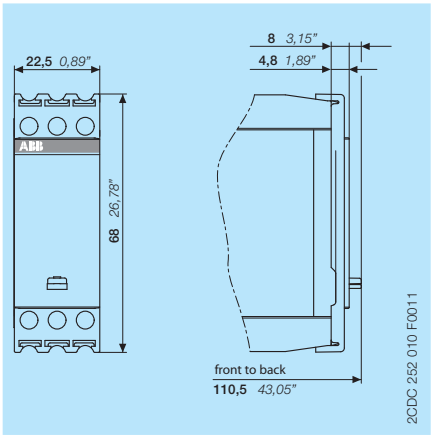

COV.11 - Sealable transparent cover

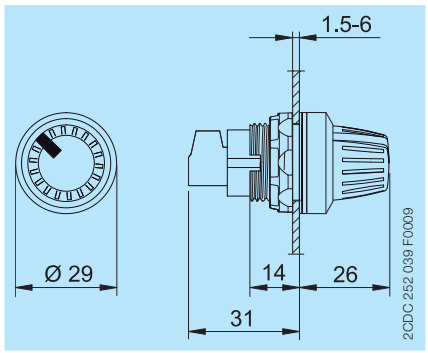

Remote potentiometer

Further documentation

Document title	Document type	Document number
Electronic Products and Relays	Technical catalogue	2CDC 110 004 C020x
CT-AHS, CT-ARS, CT-MBS, CT-MFS	Instruction manual	1SVC 730 010 M0000
Remote potentiometer for CT-S range time relays	Data sheet	2CDC 111 108 D0201

You can find the documentation on the internet at www.abb.com/lowvoltage -> Control Products -> Electronic Relays and Controls -> Time Relays

Contact us

ABB STOTZ-KONTAKT GmbH
P. O. Box 10 16 80
69006 Heidelberg, Germany
Phone: +49 (0) 6221 7 01-0
Fax: +49 (0) 6221 7 01-13 25
E-mail: info.desto@de.abb.com

You can find the address of your
local sales organization on the
ABB home page
http://www.abb.com/contacts
-> Low Voltage Products and Systems

Document number 2CDC 111 123 D0201 printed in Germany (04/2011)

Note:
We reserve the right to make technical changes or modify the contents of this document without prior notice. With regard to purchase orders, the agreed particulars shall prevail. ABB AG does not accept any responsibility whatsoever for potential errors or possible lack of information in this document.

We reserve all rights in this document and in the subject matter and illustrations contained therein. Any reproduction, disclosure to third parties or utilization of its contents – in whole or in parts – is forbidden without prior written consent of ABB AG.

Copyright© 2011 ABB
All rights reserved