SB4244

Flow meter with integrated backflow prevention and display

SBG11KL0FRKG

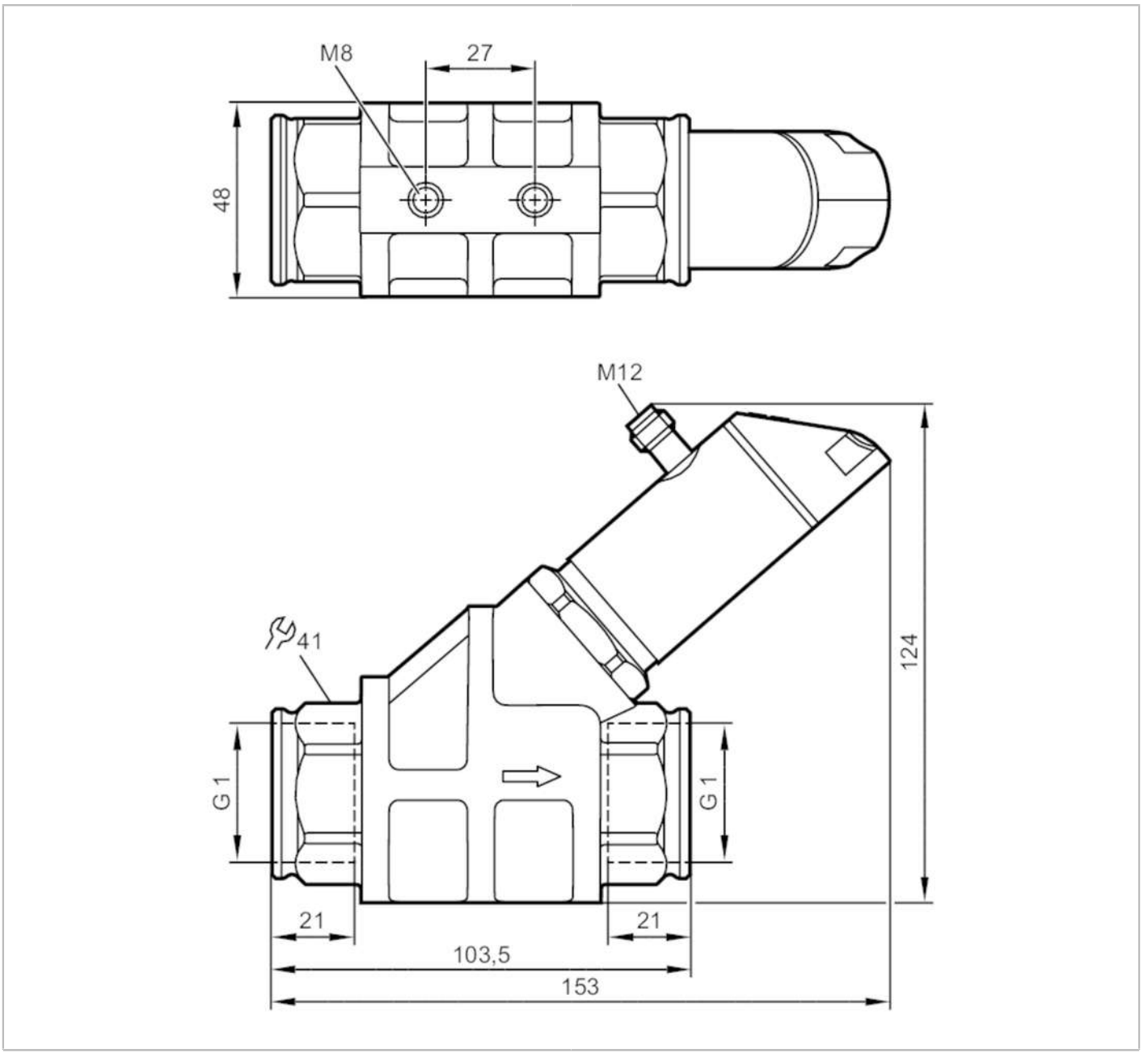

CE

Product characteristics					
Measuring range	2...50 l/min	0.12...3 m³/h	32...793 gph	0.52...13.2 gpm
Process connection	threaded connection G 1 internal thread			
Application				
Special feature	Gold-plated contacts			
Media	Liquids; oil (viscosity 100 mm²/s at 40° C)			
Medium temperature [°C]	-10...100			
Pressure rating	100 bar	10 MPa		
Note on pressure rating	at medium temperature >70°C: 80 bar / 8 MPa			

SB4244

Flow meter with integrated backflow prevention and display

SBG11KL0FRKG

Electrical data					
Operating voltage	[V]	18...30 DC; (to SELV/PELV ; "supply class 2" to cULus)			
Current consumption	[mA]	< 50			
Protection class		III			
Reverse polarity protection		yes			
Power-on delay time	[s]	< 3			
Outputs					
Total number of outputs		2			
Output signal		switching signal; analogue signal; frequency signal; IO-Link			
Output function		normally open / normally closed; (parameterisable)			
Max. voltage drop switching output DC	[V]	2			
Max. current load per output	[mA]	150; (200: ...60 °C; Ambient temperature; 250: ...40 °C; Ambient temperature)			
Analogue current output	[mA]	4...20			
Max. load	[Ω]	500			
Short-circuit protection		yes			
Overload protection		yes			
Frequency of the output	[Hz]	0...10000			
Measuring/setting range					
Measuring range		2...50 l/min	0.12...3 m³/h	32...793 gph	0.52...13.2 gpm
Display range		0...60 l/min	0...3.6 m³/h	0...951 gph	0...15.86 gpm
Resolution		0.01 l/min	0.001 m³/h	1 gph	0.01 gpm
Set point SP		0.35...50 l/min	0.02...3 m³/h	5...793 gph	0.08...13.2 gpm
Reset point rP		0...49.65 l/min	0...2.98 m³/h	0...787 gph	0...13.12 gpm
Frequency end point, FEP		3.35...50 l/min	0.2...3 m³/h	53...793 gph	0.88...13.2 gpm
In steps of		0.05 l/min	0.005 m³/h	1 gph	0.02 gpm
Frequency at the end point FRP	[Hz]	10...10000			
In steps of	[Hz]	10			
Measuring dynamics		1:50			
Temperature monitoring					
Measuring range		-10...100 °C	14...212 °F		
Display range		-32...122 °C	-25.6...251.6 °F		
Resolution		0.1 °C	0.1 °F		
Set point SP		-9.3...100 °C	15.2...212 °F		
Reset point rP		-10...99.3 °C	14...210.8 °F		
In steps of		0.1 °C	0.2 °F		
Frequency start point, FSP		-10...78 °C	14...172.4 °F		
Frequency end point, FEP		12...100 °C	53.6...212 °F		
Frequency at the end point FRP	[Hz]	10...10000			
In steps of	[Hz]	10			
Accuracy / deviations					
Flow monitoring					
Accuracy (in the measuring range)		± 5 % MEW; (Q > 1 l/min; 20...70 °C Medium temperature)			

SB4244

Flow meter with integrated backflow prevention and display

SBG11KL0FRKG

Repeatability		± 1 % MEW	
Temperature monitoring			
Temperature drift		0,029 °C / K	
Accuracy	[K]	3 K (25°C; Q > 1 l/min)	
Response times			
Flow monitoring			
Response time	[s]	0.01	
Damping process value dAP	[s]	0...5	
In steps of	[s]	0.1	
Damping for the analogue output dAA	[s]	0...5	
In steps of	[s]	0.1	
Temperature monitoring			
Dynamic response T05 / T09	[s]	T09 = 120 (Q > 1 l/min)	
Software / programming			
Parameter setting options		hysteresis / window; normally open / normally closed; switching logic; current/frequency output; damping for the switching output / analogue output; display can be rotated and switched off; standard unit of measurement; process value colour; calibration factor	
Interfaces			
Communication interface		IO-Link	
Transmission type		COM2 (38,4 kBaud)	
IO-Link revision		1.1	
SDCI standard		IEC 61131-9 CDV	
Profiles		Smart Sensor: Process Data Variable; Device Identification, Device Diagnosis	
SIO mode		yes	
Required master port type		A	
Process data analogue		2	
Process data binary		2	
Min. process cycle time	[ms]	3.2	
Supported DeviceIDs		**Type of operation**	**DeviceID**
		default	1045
Operating conditions			
Ambient temperature	[°C]	0...60	
Note on ambient temperature		medium temperature < 80 °C	
		medium temperature < 100 °C: 0...40 °C	
Storage temperature	[°C]	-15...80	
Protection		IP 65; IP 67	
Tests / approvals			
EMC		DIN EN 61000-6-2	
		DIN EN 61000-6-3	
Shock resistance		DIN EN 60068-2-27	20 g (11 ms)
Vibration resistance		DIN EN 60068-2-6	5 g (10...2000 Hz)
Pressure Equipment Directive		Sound engineering practice	

SB4244

Flow meter with integrated backflow prevention and display

SBG11KL0FRKG

Mechanical data		
Weight [g]	1539.8	
Materials	stainless steel (316L/1.4404); PBT+PC-GF30; PBT-GF20; PC; brass chemically nickel-plated	
Materials (wetted parts)	stainless steel (316 / 1.4401); stainless steel (316L/1.4404); brass (2.0371); brass chemically nickel-plated; PPS; O-ring: FKM	
Process connection	threaded connection G 1 internal thread	
Switching cycles mechanical	10 million	

Displays / operating elements		
Display	Display unit	6 x LED, green
	switching status	2 x LED, yellow
	measured values	alphanumeric display, red/green alternating indication 4-digit
	programming	alphanumeric display, 4-digit

Remarks	
Remarks	Recommendation: use a 200-micron filter.
	All data refer to oil with the following nominal viscosity: 100 mm²/s, 40 °C
	MW = measured value
	MEW = Final value of the measuring range
Pack quantity	1 pcs.

Electrical connection

Connector: 1 x M12; coding: A; Contacts: gold-plated



SB4244

Flow meter with integrated backflow prevention and display

SBG11KL0FRKG

Connection

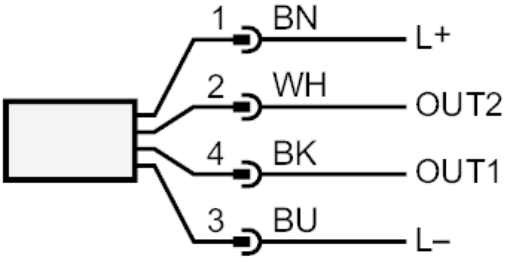

OUT1:
- switching output volumetric flow quantity monitoring
- switching output Temperature monitoring
- frequency output volumetric flow quantity monitoring
- frequency output Temperature monitoring
- IO-Link

OUT2:
- switching output volumetric flow quantity monitoring
- switching output Temperature monitoring
- analogue output volumetric flow quantity monitoring
- analogue output Temperature monitoring

colours to DIN EN 60947-5-2
Core colours :

BK = black
BN = brown
BU = blue
WH = white