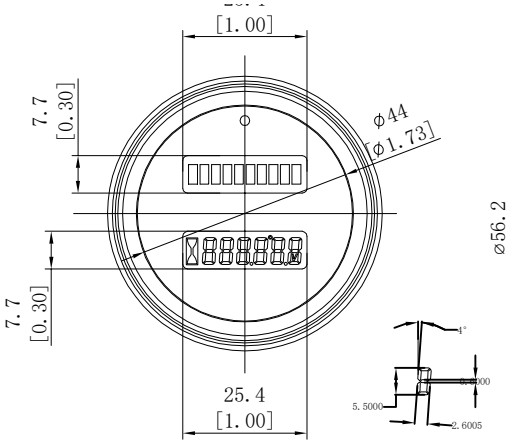

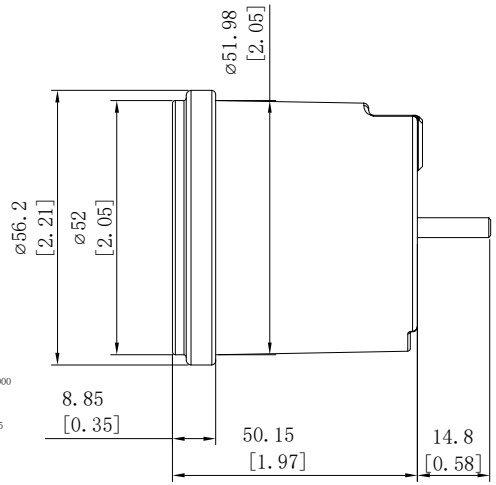

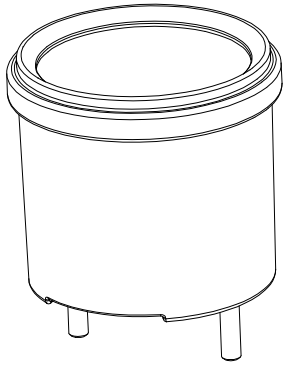

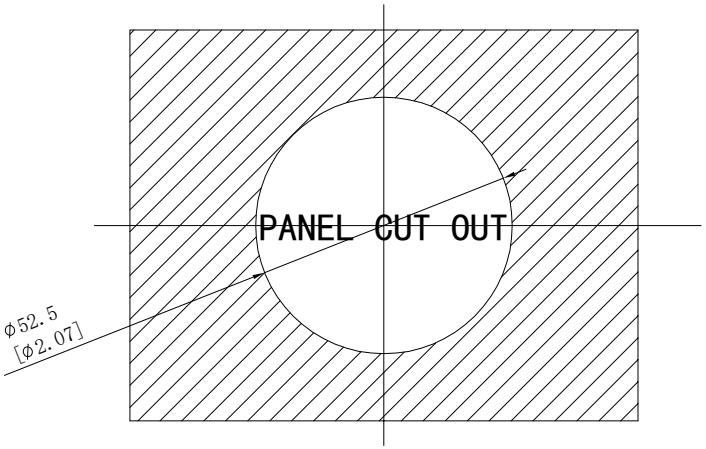

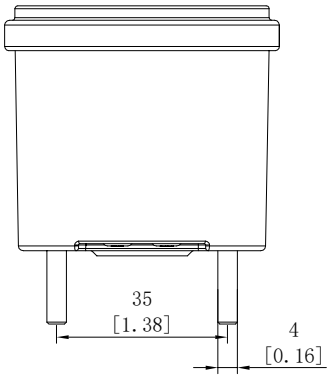

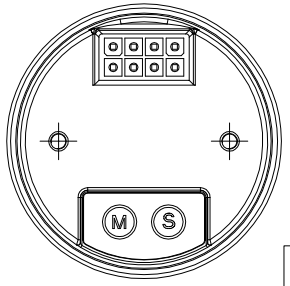

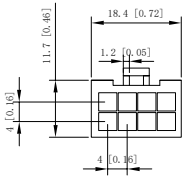

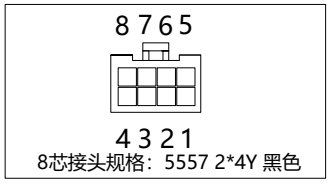

REVISIONS			
REV.	DESCRIPTION	DATE	INIT
0	INITIAL RELEASE	12/12/19	Amaz
1			

1	Timing control terminal. Connect to battery negative pole.
2	Key switch. Connect to battery positive pole.
3/4	Relay output terminal.
5	Power input negative terminal. Connect to battery negative pole.
6	Timing control terminal. Connect to battery positive pole.
7	Positive pole of battery input.(12V or 36V),connect to battery positive pole.
8	Positive pole of battery input.(24V or 48V),connect to battery positive pole.

Function Description:

1.Battery indicator:

A.When the key switch is connected,it will recognize the current voltage range of 12V/24V/36V/48V and display the remaining battery capacity automatically.

B.Delay function: Decline one LED by one LED per 155S when discharging.Rise one LED by one LED per 200s when charging.

C.Battery capacity display mode: LED

D.Discharge curve: 19 groups of battery curves can be selected; 1 group of user-defined discharge curve.

2.Voltmeter function: real-time measure the current voltage, display mode:xx.xxV.

3.Hour meter function:

A.Timing method: Two methods,connected to positive pole or negative pole of the battery to timing.

B.Timing range: 0-999999H.The resolution is 0.1H when 0.0-99999.9H;The resolution is 1H when 100000-999999H.

C.Timing type: Partial timing and total timing; Partial timing is resettable, total timing is not resettable;

4.Display Mode:The working parameter and information are displayed by 6 digits LCD screen; The remaining battery capacity is displayed by 10 LED bars.

5.Data storage: Inner EEPROM, can store the data(like working hours,etc) around 20years;

6.Relay output function:

A.Battery capacity ＞10%, relay will be NC.

B.Battery capacity ≤10% ,relay will be NO.

No	Item	Parameter
1	Housing Material	ABS+Aluminum
2	Operating Voltage	DC 8-60V
3	Working temperature	-20℃ TO 65℃
4	Product Weight	108g
5	Display window size(visible)	25.5*7.4mm
6	Product Size	Φ56.2*64.8mm
7	Waterproof Level	IP65

UNLESS OTHERWISE SPECIFIED DIMENSIONS ARE IN INCHES
TOLERANCES ARE:
.X± .1
.XX± .02
.XXX± .005
X°± 1°

COMPUTER GENRATED DRAWING-NO MANUAL CHANGES ALLOWED

DRAWN | DATE
CHECKED | DATE
APPROVEO | DATE
MATERIAL: N/A
FINISH: N/A
DO NOT SCALE DRAWING
PROJECTED VIEWS ARE 3RD ANGLE
STATUS: DS4_DESIGN

Runleader®
NINGBO JIANGBEI RUN LEADER ELECTRONICS CO., LT
WWW.RUN-LEADER.COM

TITLE: Battery Indicator
SIZE: B | PART.NO.: RL-BI011
SCALE: NTS | SHEET: 1 OF 1 | PROJECT NO.: 008 | REVISION: 0