87045 LIMOGES Cedex
Phone : 05 55 06 87 87 – Fax : 05 55 06 88 88

SNAP-ON TRUNKING

Number(s) 0 105 80-0 110 20-0 110 22-0 110 24-0 310 69-0 756 01 to 04/06/08/09/11 to 14/16/21 to 24/26, 0 756 31 to 34/36/41 to 44/46/61 to 63/66/67/69/71/72/75/76/81/88/90-0 765 42/46, 0 771 01 to 04/06/21 to 24/92

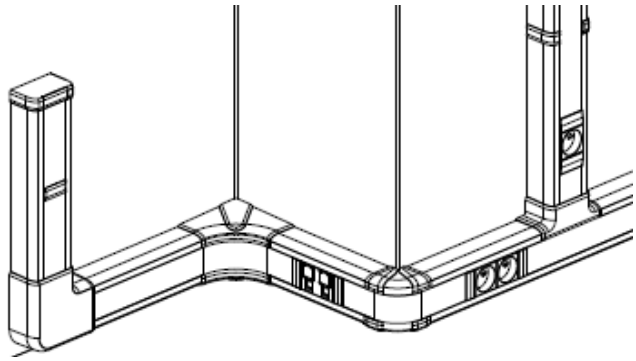

CONTENTS PAGES

1.Snap-on trunking	**1 to 6**
2.Finishing Accessories	**7 to 13**
3.Sockets	**13**
4.Technical characteristics	**14**
5.Material characteristics	**14**

1. SNAP-ON TRUNKING.

Snap-on trunking offers:

- the distribution, the protection and the derivation of the various cables in an electrical installation.
- trunkings, finishing accessories (end, joint of lid, joint of body, interior angle, exterior angle, flat angle, derivation)
- all the easy ways/advantages for the installation.
- to comply with the norm EN 50085-2-1, safety and technical performance.
- a flexibility with the installation and maintenance:

Direct Clipping with all the functions of the Mosaic Program (and also the sockets of the market) = by associating the accessory of installation (soluclip)

Direct Clipping with the sockets for trunking Programs Mosaic and RJ45 with integrated accessory = optimal solution for the installation of the sockets into direct clipping trunking

8 references of trunkings delivered with a cover of 45mm for clips of the equipment on all the range.

This new trunking will allow the universal direct clips of all the mechanisms 45x45 of the market

It is the best way available to integrate in a natural way in the Mosaic Program by a total symbiosis of the trunkings and equipment (identical RAL)

Communication by color codes on packaging of the products.

- Label system on the packaging to facilitate the choice of the products.

- Flexible cover with double fixing, powerful, easy to install and which is integrated well with the angles for an irreproachable aesthetic completion.

- Clips and variability of the angles.

- Fish-plate which makes it possible for just one man to install a length of 2m
.
- Pre-drilling of the funds in the trunking with 2 and 3 compartments.

1. SNAP-ON TRUNKING (continued)

A real innovation in the field of the trunkings with clippage direct, the “Snap-on trunking” accompanied by the new sockets for (high tension current, undeceived high tension current and low current) propose the innovative functions of anti-slip and anti-pullout of the equipment, of maintains IP40 and perfect finishing

- Legrand equipment and trunkings makes a optimal association for the realization of an electrical installation in conformity in all points.

Ex : standard sockets RJ 45 sockets



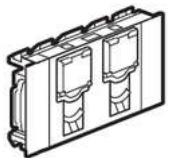

The IP40 is maintained everywhere thanks to the quality of the trunkings and accessories.

The fitter doesn’t have to deal with the quality of the cut to the function of soluclip which hides any defect.

The function of anti-pullout makes it possible not to be intervened on the building site for problems of bad installation of equipment in the trunking.

The safety of the installation is it also increased by this function by eliminating the possibilities from pullout of a socket by an end user (while strongly drawing on a cord or while stumbling feet in the cords)

The function the anti-slip: the fitters will appreciate not to note an inopportune displacement of the equipment at the time of the various phases of installation (poses, wiring, road repair, closing of the covers) being able to involve errors of site of equipment or disconnection.

1. SNAP-ON TRUNKING (continued)

1.1 Trunking 50x80 ref 0 756 01 and 0 110 20 (boby and cover)

Trunking 1 compartment :

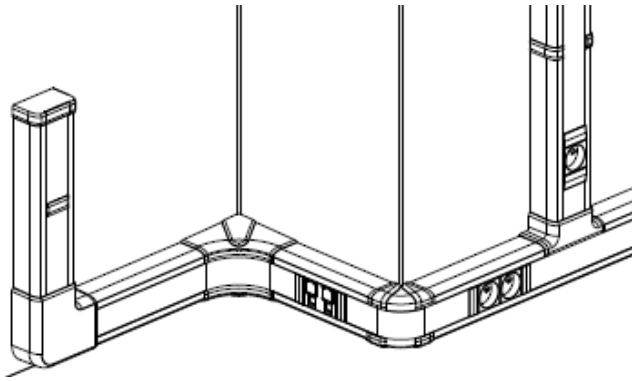

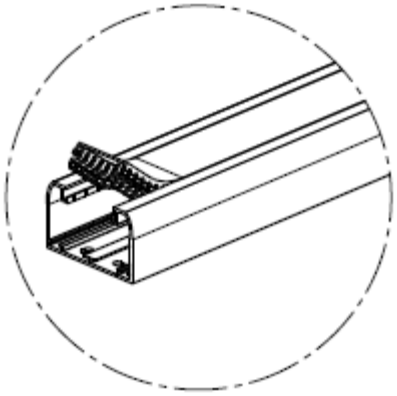

80X50

Delivered with cover in length of :

- 2 m for ref. 0 756 01
- 2.50 m for ref. 0 110 20

White Color

Fixing by:

- wall plugs for immediate fixing (without screw nor nail ref. 0 308 99)
- DLP rapid wall plug ref 0 308 97 (for 10mm maxi plasterboard walls at least 20mm away from the concrete surface)
- screw, nails…

Cut out using a saw (standard hacksaw)

Possibility of adapting separation partition.

Pack by :

- 10 lengths of 2 m for ref. 0 756 01 (cardboard package)
- 4 lengths of 2.50 m for ref. 0 110 20 (plastic bag package)

1. SNAP-ON TRUNKING (continued)

1.1 Trunking 50x80 ref 0 756 01 (boby and cover) (continued)

Dimensions :

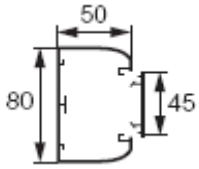

Wiring capacity.

Ø maxi : 38mm
Cross-Section : 2934mm²

50x80



	Cross section Maxi (A)	Capacity with Mosaic support(A)
1,5mm²	177	94
2,5mm²	131	70
4mm²	115	61
6mm²	85	45
3x1,5mm²	26	13
3x2,5mm²	19	10
UTP & FTP CAT.6	58	31

1. SNAP-ON TRUNKING (continued)

1.2 Trunking 50x105 ref 0 756 02 (boby and cover)

Trunking 1 compartment :

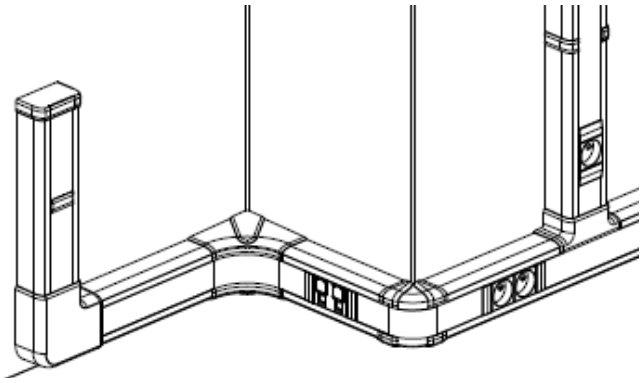

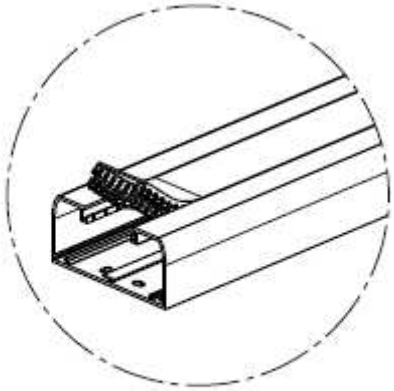

105X50

Delivered in length of 2m with cover width 45mm

White Color

Fixing by:

- wall plugs for immediate fixing (without screw nor nail ref. 0 308 99)
- DLP rapid wall plug ref 0 308 97 (for 10mm maxi plasterboard walls at least 20mm away from the concrete surface)
- screw, nails…

Cut out using a saw (standard hacksaw)

Possibility of adapting separation partition.

Pack by :

- 6 lengths of 2 m (cardboard package)

1. SNAP-ON TRUNKING (continued)

1.2 Trunking 50x105 ref 0 756 02 (boby and cover) (continued)

Dimensions :

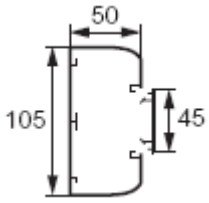

Wiring capacity.

Ø maxi : 38mm
Cross-Section : 4098mm²

50x105



	Cross section Maxi (A)	Capacity with Mosaic support(A)
1,5mm²	248	165
2,5mm²	184	122
4mm²	161	107
6mm²	119	79
3x1,5mm²	36	24
3x2,5mm²	26	17
UTP & FTP CAT.6	81	54

1. SNAP-ON TRUNKING (continued)

1.3 Trunking 50x130 ref 0 756 03 and 0 110 22 (boby and cover)

Trunking 2 compartments :

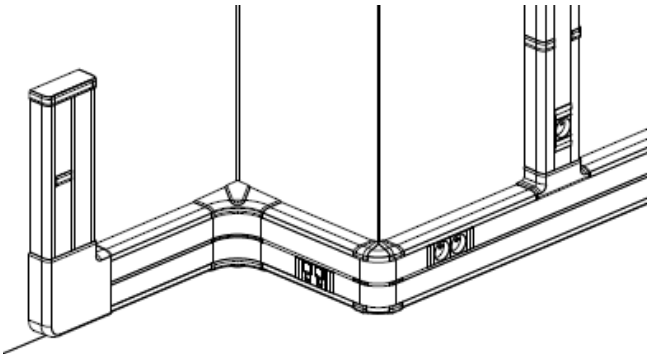

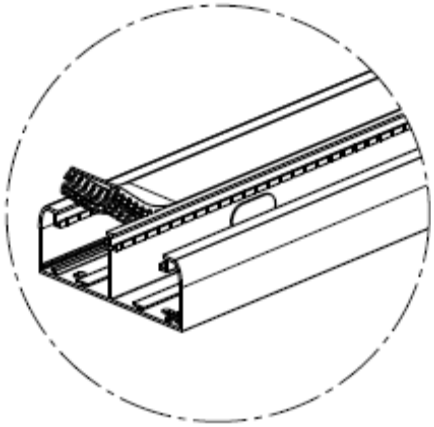

130X50

Delivered with cover in length of :

- 2m for ref. 0 756 03
- 2.50 m for ref. 0 110 22

White Color

Fixing by:

- wall plugs for immediate fixing (without screw nor nail ref. 0 308 99)
- DLP rapid wall plug ref 0 308 97 (for 10mm maxi plasterboard walls at least 20mm away from the concrete surface)
- screw, nails…

Cut out using a saw (standard hacksaw)

Possibility of adapting separation partition.

Pack by :

- 6 lengths of 2 m for ref. 0 756 03 (cardboard package)
- 2 lengths of 2.50 m for ref. 0 110 22 (plastic bag package)

1. SNAP-ON TRUNKING (continued)

1.3 Trunking 50x130 ref 0 756 03 (boby and cover) (continued)

Dimensions :

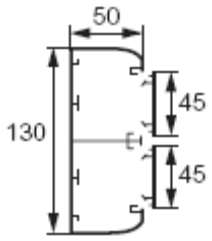

Wiring capacity.

Ø maxi : 38mm
Cross-Section : 2442mm² in each compartment

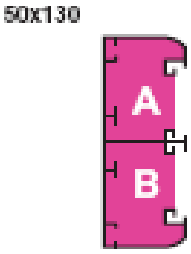

	Cross section Maxi (A/B)	Capacity with Mosaic support(A/B)
1,5mm²	148	65
2,5mm²	109	48
4mm²	96	42
6mm²	71	31
3x1,5mm²	21	9
3x2,5mm²	16	7
UTP & FTP CAT.6	48	21

1. SNAP-ON TRUNKING (continued)

1.4 Trunking 50x145 ref 0 756 04 (boby and cover)

Trunking 2 compartments :

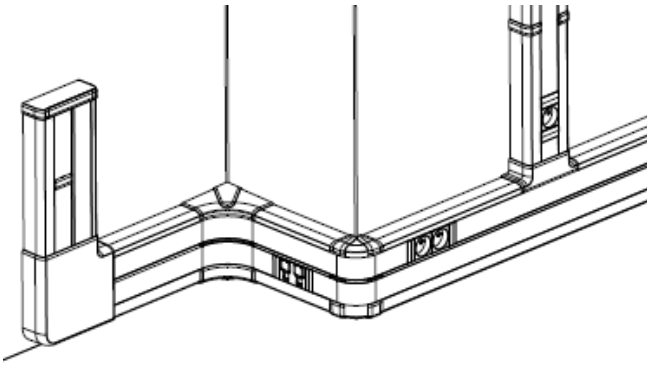

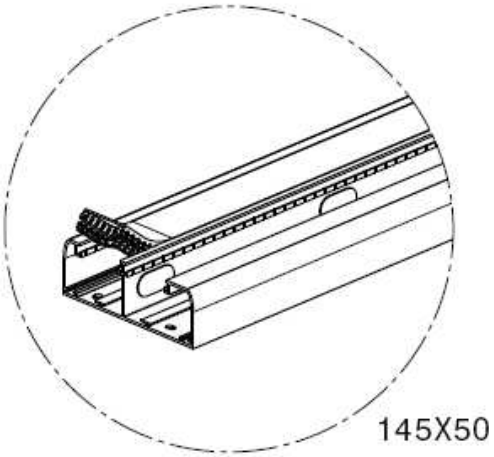

Delivered in length of 2m with cover width 45mm

White Color

Fixing by:

- wall plugs for immediate fixing (without screw nor nail ref. 0 308 99)
- DLP rapid wall plug ref 0 308 97 (for 10mm maxi plasterboard walls at least 20mm away from the concrete surface)
- screw, nails…

Cut out using a saw (standard hacksaw)

Possibility of adapting separation partition.

Pack by 4 lengths of 2 m (carboard package)

1. SNAP-ON TRUNKING (continued)

1.4 Trunking 50x145 ref 0 756 04 (boby and cover) (continued)

Dimensions :

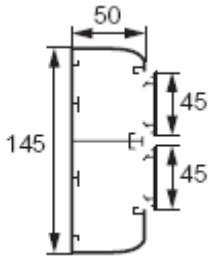

Wiring capacity.

Ø maxi : 38mm
Cross-Section : compartment A = 2442mm² compartment B = 3024mm²

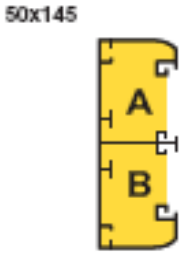

	Cross section Maxi		Capacity with Mosaic support	
	A	B	A	B
1,5mm²	148	183	65	100
2,5mm²	109	135	48	74
4mm²	96	119	42	65
6mm²	71	88	31	48
3x1,5mm²	21	26	9	14
3x2,5mm²	16	19	7	10
UTP & FTP CAT.6	48	60	21	33

1. SNAP-ON TRUNKING (continued)

1.5 Trunking 50x180 ref 0 756 06 and 0 110 24 (boby and cover)

Trunking 3 compartments :

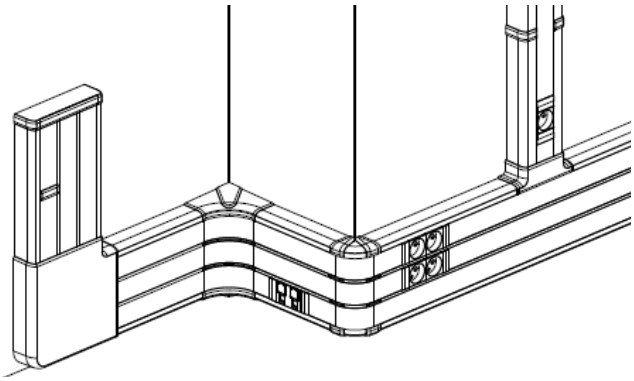

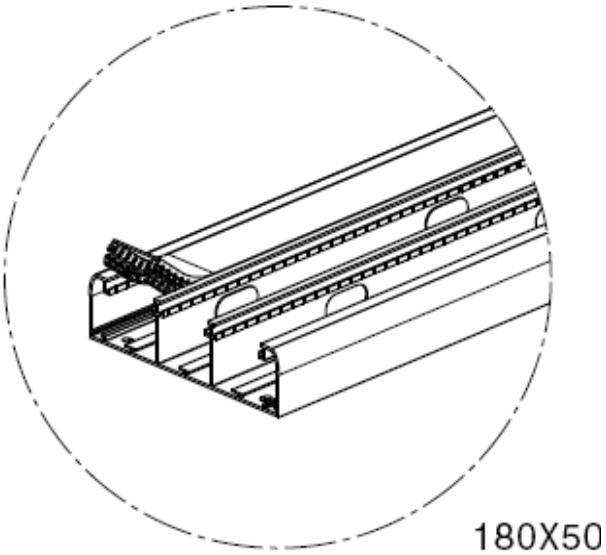

Delivered with cover in length of :
- 2m for ref. 0 756 06
- 2.50 m for ref. 0 110 24

White Color

Fixing by:

- wall plugs for immediate fixing (without screw nor nail ref. 0 308 99)
- DLP rapid wall plug ref 0 308 97 (for 10mm maxi plasterboard walls at least 20mm away from the concrete surface)
- screw, nails…

Cut out using a saw (standard hacksaw)

Possibility of adapting separation partition.

Pack by :
- 4 lengths of 2 m for ref. 0 756 06 (carboard package)
- 2 lengths of 2.50 m for ref. 0 110 24 (plastic bag package)

1. SNAP-ON TRUNKING (continued)

1.5 Trunking 50x180 ref 0 756 06 (boby and cover) (continued)

Dimensions :

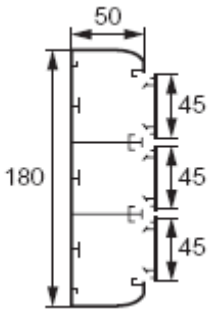

Wiring capacity.

Ø maxi : 38mm
Cross-Section : compartment A/C = 2442mm² compartment B = 1950mm²

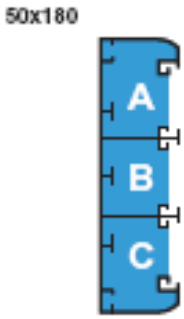

	Cross section Maxi		Capacity with Mosaic support	
	A/C	B	A/C	B
1,5mm²	148	118	65	35
2,5mm²	109	87	48	26
4mm²	96	76	42	22
6mm²	71	55	31	16
3x1,5mm²	21	17	9	5
3x2,5mm²	16	12	7	3
UTP & FTP CAT.6	48	38	21	11

2. FINISHING ACCESSORIES.

2.1 Internal angle ref. 0 756 21/22/23/24/26.

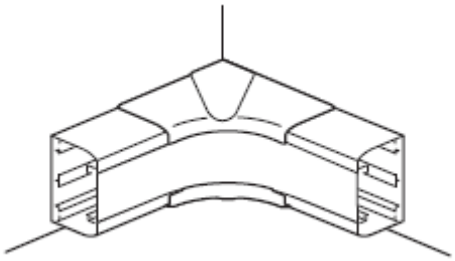

White color.
The junction in interior angle of two pieces of the same section:
- avoid the cut of miter on the trunking
- respect of the degree protection
- aesthetics improves (covering of the cut and not or little extra thickness)

Assembly on the body by clipsage.
The internal angles thus ensure the continuity of the flexible cover on the angles do not require cut of cover, and look after aesthetics.
Variable internal angles of 80 with 100°.
The interior angles are delivered with:
- 1 element to some extent high
- 1 element to some extent low part

To simplify the offer certain references of angles are delivered with junctions of partition (in the case as of profiled with several compartments).
The internal angles are delivered with 2 elements (ex: for trunking 1 compartment)

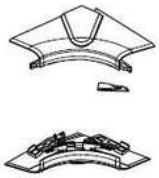

The internal angles are delivered with 3 elements (ex: for trunking 2 compartment with partition junction)

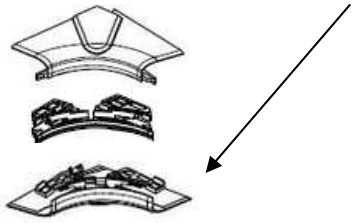

References	Pack	For trunking
0 756 21	10	0 756 01/0 110 20
0 756 22	10	0 756 02
0 756 23	5	0 756 03/0 110 22
0 756 24	5	0 756 04
0 756 26	5	0 756 06/0 110 24

Mini dimensions (in mm) to be respected between internal/external angle or external/external angle

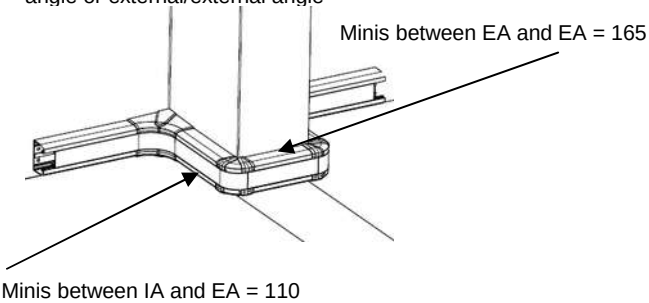

2. FINISHING ACCESSORIES (continued)

2.2 External angle ref. 0 756 31/32/33/34/36.

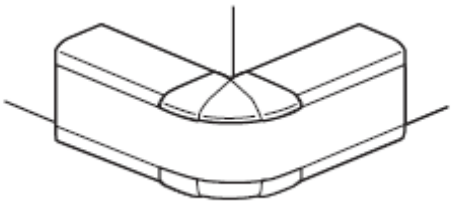

White color.
The junction in exterior angle of two pieces of the same section:
- avoid the cut of miter on the trunking
- respect of the degree protection
- aesthetics improves (covering of the cut and not or little extra thickness)

Assembly on the body by clipsage.
The external angles thus ensure the continuity of the flexible cover on the angles do not require cut of cover, and look after aesthetics.
Variable external angles of 85 with 120°.
The external angles are delivered with:
- 1 element to some extent high
- 1 element to some extent low part

To simplify the offer certain references of angles are delivered with junctions of partition (in the case as of profiled with several compartments).
The external angles are delivered with 2 elements (ex: for trunking 1 compartment)

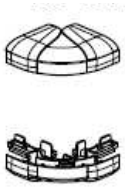

The external angles are delivered with 3 elements (ex: for trunking 2 compartment with partition junction)

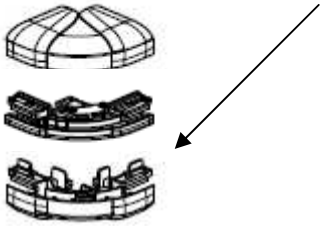

References	Pack	For trunking
0 756 31	10	0 756 01/0 110 20
0 756 32	10	0 756 02
0 756 33	5	0 756 03/0 110 22
0 756 34	5	0 756 04
0 756 36	5	0 756 06/0 110 24

Mini dimension in mm to be respected allowing the installation of angle inter/exter: (in the case of a skirting of post for example)

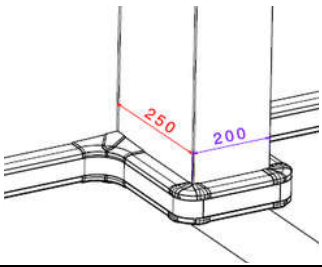

2. FINISHING ACCESSORIES (continued)

2.3 Flat angle ref. 0 756 41/42/43/44/46.

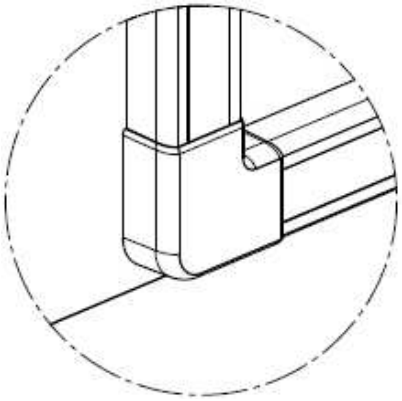

White color.

The junction in flat angle of two same sections allows:
- avoid the cut of miter on the trunking
- respect of the degree protection
- the distribution of the various currents preserves
- aesthetics (covering of the cut) improves

Assembly on the body by clipsage.

Angles not variable (fixes at 90°)
The flat angles are delivered with 2 elements.

Platine Capot

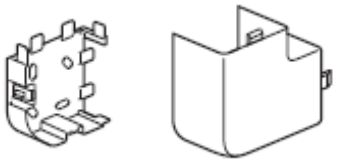

References	Pack	For trunking
0 756 41	10	0 756 01/0 110 20
0 756 42	10	0 756 02
0 756 43	5	0 756 03/0 110 22
0 756 44	5	0 756 04
0 756 46	5	0 756 06/0 110 24

Dimension AP (capot)

AP capot

	A	A'	B
L 80	123,3	123,3	52,3
L 105	148,3	148,3	52,3
L 130	175,3	175,3	52,8
L 145	187,8	187,8	52,8
L 180	226,7	226,7	52,8

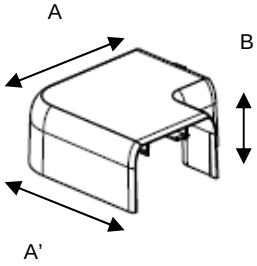

2. FINISHING ACCESSORIES (continued)

2.4 Flat junction ref. 0 756 71/72/75/76.

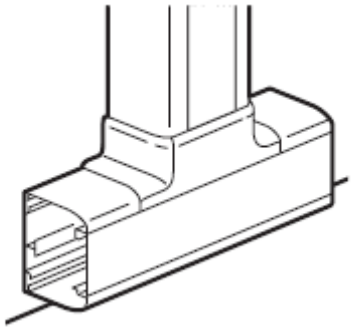

White color.

The junction in “T” allows.
- respect of the degree protection
- aesthetics (covering of the cut) improves

Assembly on the body by clipsage

Example with 80x50 :

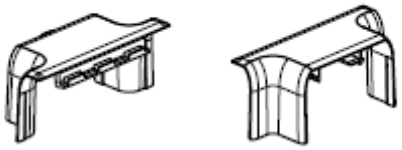

To tap-off to an 80mm wide trunking:

References	Pack	For trunking
0 756 71	5	0 756 01/0 110 20
0 756 72	5	0 756 02 et 0 756 04 low

To tap-off an 105mm wide trunking:

References	Pack	For trunking
0 756 75	5	0 756 03/06 – 0 110 22/24 & 0 756 04 high
0 756 76	5	0 756 02 & 0 756 04 low

2. FINISHING ACCESSORIES (continued)

2.5. End cap ref. 0 756 11/12/13/14/16.

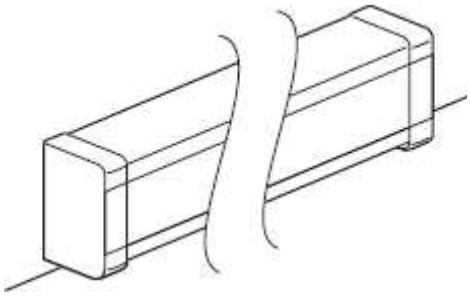

White color.

Allows to block the end of the body:
- respect of the degree protection
- improvement of aesthetics (covering of the cut)
- left or right end cap

Assembly on the body by fitment and screwing.

The end cap is delivered with a screw and of a part of closing

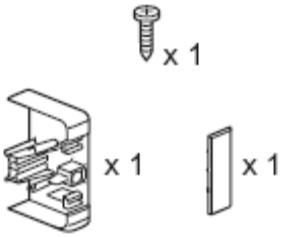

Pose (requiring more place) provided with a part of closing which facilitates the intervention on the trunking by a simple access to the compartments

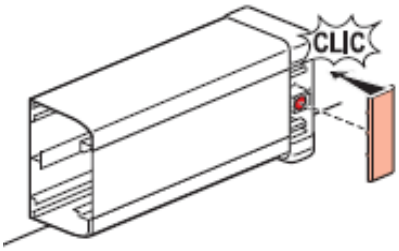

References	Pack	For trunking
0 756 11	10	0 756 01/0 110 20
0 756 12	10	0 756 02
0 756 13	5	0 756 03/0 110 22
0 756 14	5	0 756 04
0 756 16	5	0 756 06/ 0 110 24

2. FINISHING ACCESSORIES (continued)

2.6 Cover joint ref. 0 756 69

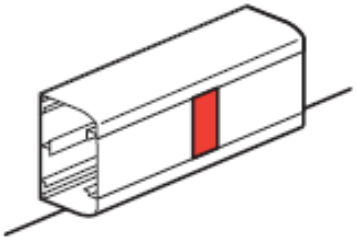

White color.

Allows:
- the junction end to end of two covers
- respect of the degree protection
- to improve aesthetics (covering of the cut)

Assembly of the joint by clipsage

Pack by 10

Assembly of the cover joint by clipsage of the two parts

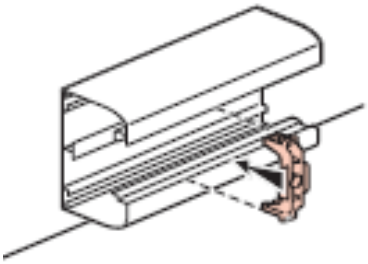

By removing the part of completion of the cover joint, that gives access simply the cover to withdraw it and facilitates the intervention in the compartment.

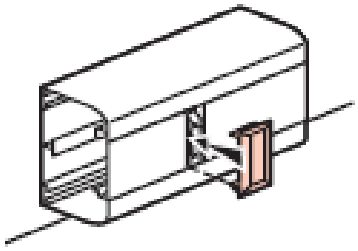

- cover joint width 45mm

2. FINISHING ACCESSORIES (continued)

2.7 Body joint ref. 0 756 66/67

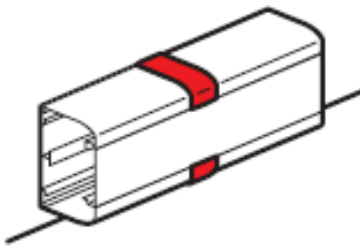

White color.

Allows:
- the junction end to end of two same section
- respect of the degree protection
- to improve aesthetics (covering of the cut)
- fixing by adhesive, poses at the end of the installation

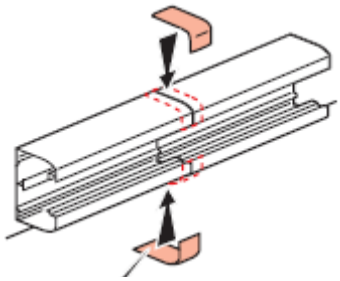

Pack by 20

Ref. 0 756 66, adhesive body joint for trunking to small sides of 17mm (50x80, 50x130 and high side of the 50x145 and 50x180)



Ref. 0 756 67, adhesive body joint for trunking to large sides of 29mm (50x105 and low side of the 50x145)



2. FINISHING ACCESSORIES (continued)

2.8 Fishplate body joint ref. 0 756 61/62/63

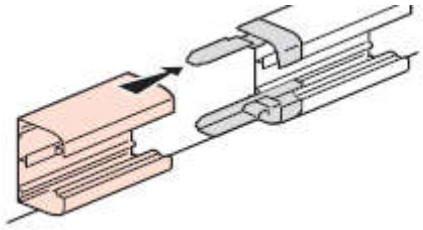

White color.

Permet :
- Used to join 2 bodies and simplifies fixing sections to the wall
- respect of the degree protection
- to improve aesthetics (covering of the cut)

Pack by 10 (10 set of 2)

Ref 0 756 61, Fishplate body joint for trunking to small sides of 17mm 50x80, 50x130 or 50x180



Réf 0 756 62, Fishplate body joint for trunking to large sides of 29mm 50x105

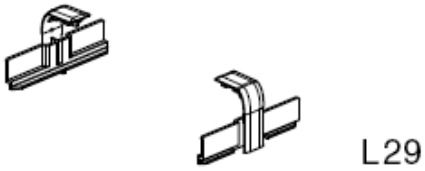

Réf 0 756 63, Fishplate body joint for trunking 50x145.

Set of 2 (1 fishplate body joint L17 + 1 fishplate body joint L29)

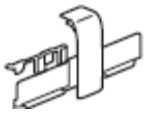

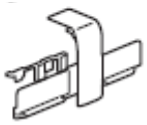

2. FINISHING ACCESSORIES (continued)

2.9 Angled junction ref. 0 756 81.

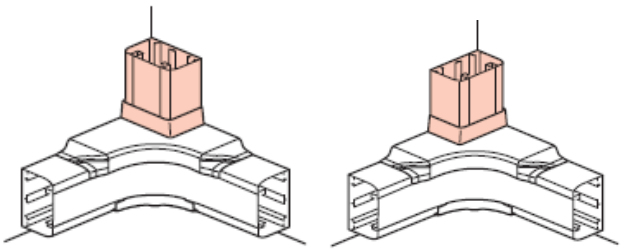

The angled junction:

- the distribution of the various currents preserves
- respect of the degree protection

Angled junction (to be associated with the interior angles)

White color.

Assembly in angle on wall right-hand side or left ⇨ trunkings 50x80mm, 50x105mm or 50x130mm.

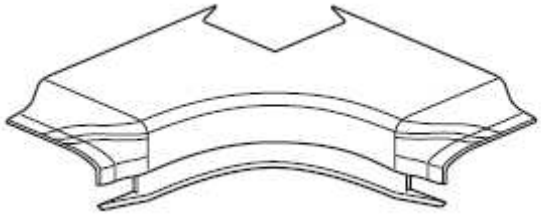

Angled junction are delivered with 3 elements of derivation for trunkings of your choice:

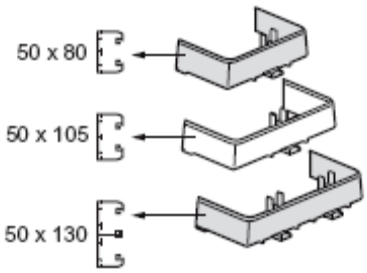

Pack by 5

2. FINISHING ACCESSORIES (continued)

2.10 Junction with floor duct ref. 0 756 88.

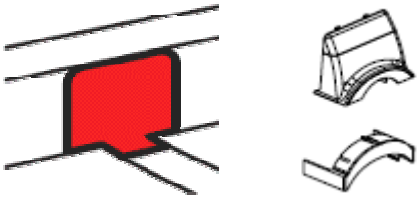

White color.

Creates a junction with a floor duct size 50x12mm or 92x20mm :

- the distribution of the various currents preserves
- respect of the degree protection

Junction with floor duct have 2 elements (1 element for clips on the trunking and 1 element for clips on the floor duct)

Pack by 5.

2.11 Height spacer ref 10580

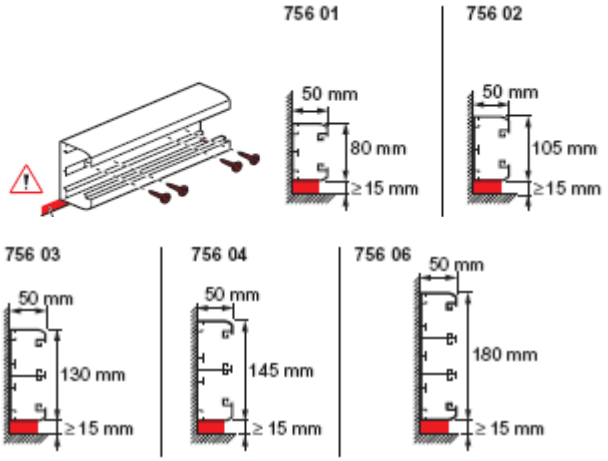

Lenght 2m, color charcoal grey.
For fitting 15mm from the ground in accordance with standard NF C 15-100 (when installing mains voltage wiring accessories and/or using wires)

Dimensions.

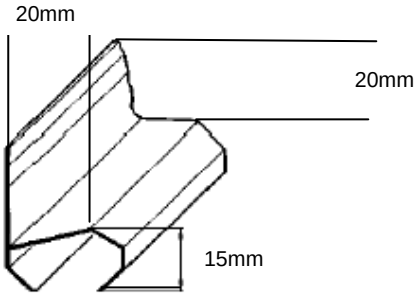

Pack by 24m

2. FINISHING ACCESSORIES (continued)

2.12 Soluclip accessory ref. 0 756 90

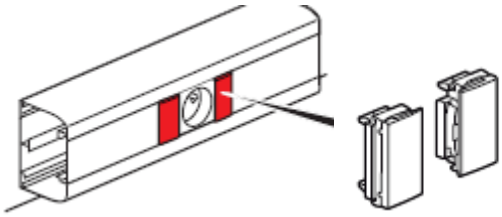

White color.

Pack by 10 (10 set of 2)

Allows:

- anti-slip
- anti-pullout
- perfect finish
- respect of the degree protection (IP4X)

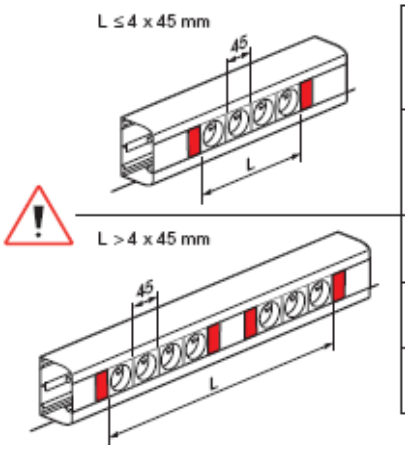

	45 mm
1 x 756 90	1 ⟶ 4
2 x 756 90	5 ⟶ 8
3 x 756 90	9 ⟶ 12
4 x 756 90	13 ⟶ 16

Be careful with the sens of soluclip :

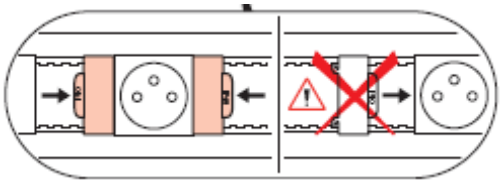

Installation principle for sockets for snap-on trunking :

A= disengage the finishing piece
B= rotate the finishing piece by 180°
C= snap on the finishing piece

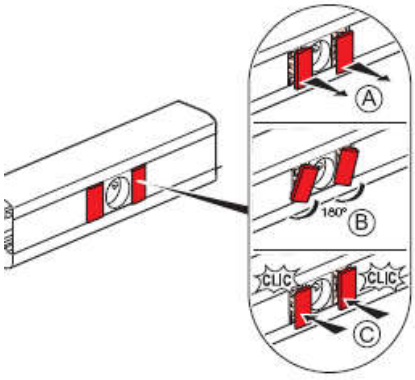

2. FINISHING ACCESSORIES (continued)

2.13 Quick tap-off accessory ref 0 771 06 :

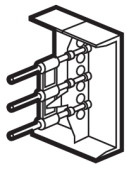

Pack by 10
White color.

Operating principle for tap-off accessory :

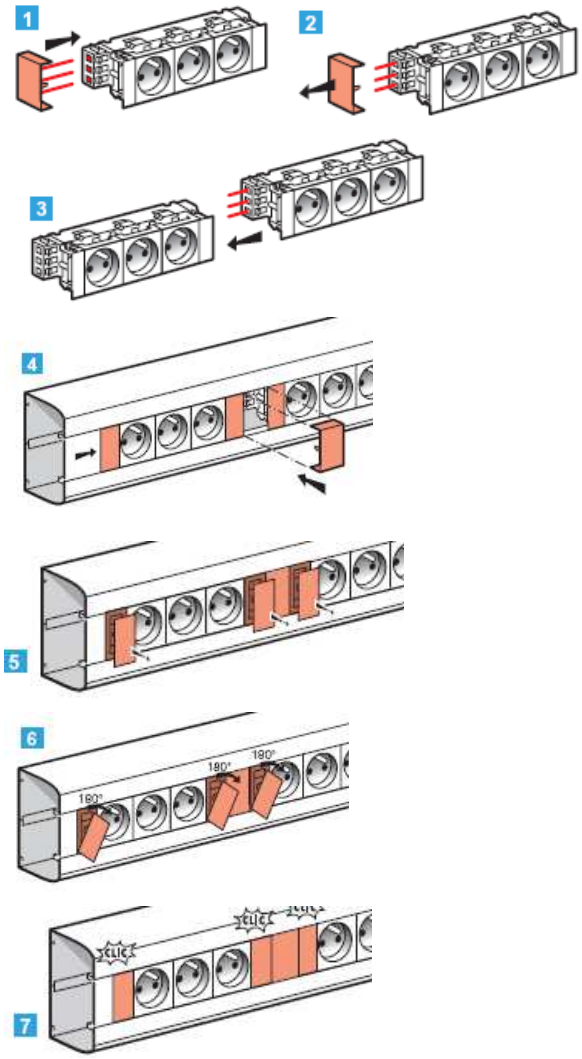

Simple, intuitive tap-off from 2 socket blocks.
The tap-off accessory also acts as a finishing piece for the 2 socket blocks.

2. FINISHING ACCESSORIES (continued)

2.14 Separation partition ref 0 756 09

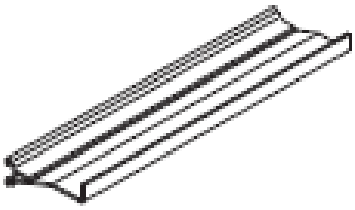

Delivered in length of 2m
White Color.
For the separation of various types of currents allows (sector, telephone, data processing…)
Assembly with the body by clipsage.
Pack by 26m

Possibility of adapting removable separations (for the separation of the currents in the same compartment)

Funds of the bodies provided with holes for fixing, facilitating the upgrade of the trunking (balance/slope)

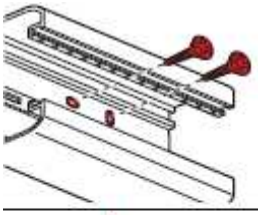

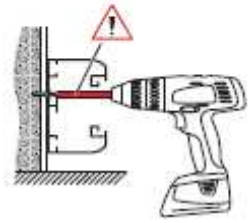

- Bodies notched on the ends for obtaining the anti-slip function, association with the accessory Soluclip (equipment delivered equipped with the Soluclip accessory)

Specifications holes of partition: facilitate the passage of the cables between two compartments.

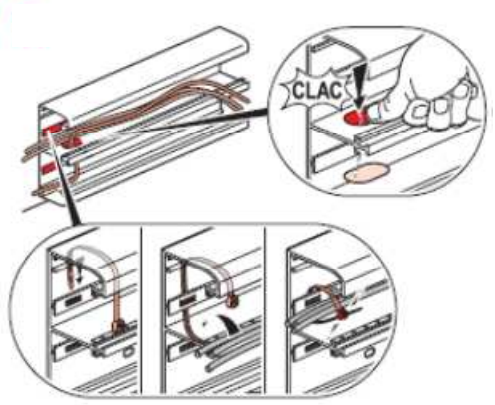

The “t-piece” in the content of the trunking are provided with holes allowing the passage of a collar for the reserve of the cables inside the compartment:

2.15 Flexible cover ref 0 756 08

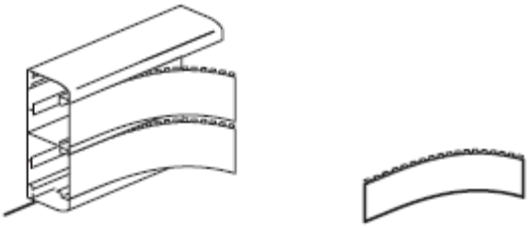

Delivered in length of 2m.
White color.
Cut out using a saw (standard hacksaw)
Assembly on the body by clipsage.

Pack by 20m

2.16 Support Lexic modular ref. 0 310 69

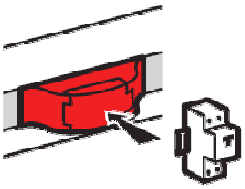

White color.
Dimensions : 90mmx45mmx41mm (high of transparent lid)
Allows:
- for installation of Lexic modular.

Pack by 5

3. SOCKETS.



0 772 02

Pack	Cat.Nos	Sockets for snap-on trunking
		Sockets with connection at both sides for snap-on mounting on trunking with 45 mm cover. Particularly suitable for installation on snap-on trunking (p. 799 to 801) The sockets incorporate the Soluclip accessory to hold the socket in place and comply with the standard Connected with automatic terminals
	White / Tamperproof	**Standard and tamperproof sockets** German Standard
10	0 772 02 / 0 772 22	2 x 2P+E
10	0 772 03 / 0 772 23	3 x 2P+E
		Red sockets German Standard Sockets with red finish for identification of dedicated circuits
10	Red 0 772 42	2 X 2P+E at an angle of 45°
10	0 772 43	3 X 2P+E at an angle of 45°
5	NEW White 0 765 46	**Cat. 6 FTP - RJ 45 sockets** FTP - 9-pin, 2 RJ 45, equipped with the Soluclip accessory 3-gang
5	NEW 0 765 42	**Cat. 5e FTP - RJ 45 sockets** FTP - 9-pin, 2 RJ 45, equipped with the Soluclip accessory 3-gang

4. TECHNICAL CHARACTERISTICS (continued)

Classification of trunking EN 50085-2-1

6.2 Resistance to impact for installation and application	2.0J
6.3 Minimum storage and transport temperature	- 25°C
6.3 Minimum installation and application temperature	- 5°C
6.3 Maximum application temperature	+ 60°C
6.4 Resistance to flame propagation	Non-flame propagating
6.5 Electrical continuity characteristic	Without electrical continuity characteristic
6.6 Electrical insulating characteristic	With electrical insulating characteristic
6.7 Degrees of protection provided by enclosure	IP40
6.9 The system access cover retention	With a tool
6.101 The position when surface mounted	Wall fixed Celling fixed
6.102 The functions provided	Type 1
Rated current	500 V
Protection against mechanical shocks	IK 07

Compositions and functions of trunking (1 system per line) EN 50085-2-1 :

Trunking			End cap
Body+cover	references	Section (mm²)	
50x80	0 756 01/0 110 20	2934	0 756 11
50x105	0 756 02	4098	0 756 12
50x130	0 756 03/0 110 22	2442/2442	0 756 13
50x145	0 756 04	2442/3024	0 756 14
50x180	0 756 06/0 110 24	2442/1950/2442	0 756 16

5. MATERIAL CHARACTERISTICS.

The trunkings, covers and partitions are in PVC white RAL 9003.

Plastic accessories:

The accessories are in plastic ABS white RAL.