

Female connector, field-attachable

V31-GM

- Screw terminal connection
- Metal locking
- UL Recognized Component

Female connector M8 straight A-coded 4-pin, for cable diameter 3,5 - 5 mm, field-attachable

Dimensions

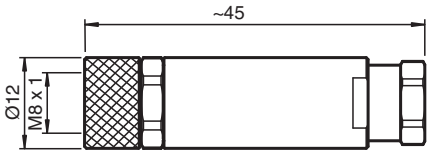

Technical Data

General specifications		
Connector 1		
Connection		socket
Construction type		M8
Style		straight
Locking		screw connection
Number of pins		4
Coding		A-coded
Electrical specifications		
Operating voltage	U_B	max. 30 V AC/DC
Operating current	I_B	max. 4 A
Conformity		
Degree of protection		EN 60529
Plug connection		connector M8 x 1 : IEC 61076-2-104
Approvals and certificates		
UL File Number		E363587
Ambient conditions		
Ambient temperature		-40 ... 85 °C (-40 ... 185 °F)
Pollution degree		3
Mechanical specifications		
Plug connector		
Tightening torque		0.5 Nm
Tool installation		cross-hatched knurling
Mating cycles		min. 100
Degree of protection		IP67
Connection		screw terminals for 0.14 ... 0.5 mm² / AWG 26 ... AWG 20

Release date: 2024-06-03 Date of issue: 2024-06-08 Filename: 125688_eng.pdf

Technical Data

Cable		
Sheath diameter		3.5 ... 5 mm
Core cross section		0.5 mm² / 20 AWG max.
Installation		screw terminals 0.4 Nm pressure nut 0.2 ... 0.3 Nm
Mass		11 g
Material		
Plug connector		
Screw connection		CuZn, nickel-plated
Body		PBT, black
Contact surface		gold plated (Au)

Connection Assignment



Connection

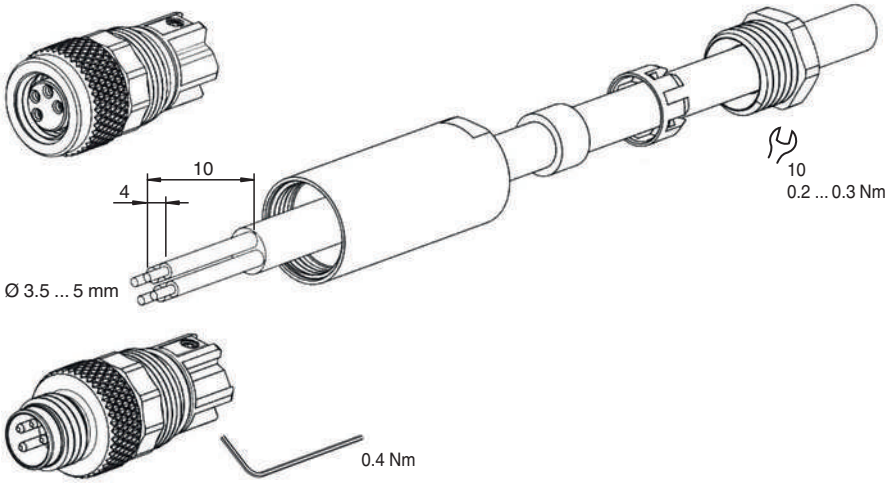

Release date: 2024-06-03 Date of issue: 2024-06-08 Filename: 125688_eng.pdf