Ex position switch with safety function
Ex 14 WR 1Ö/1S - 5m
Material number: 1045393 (Material number old: 14010908)

Features/Options

- Ex zone 1 and 21
- Thermoplastic enclosure
- Double insulated ⧈
- Mounting details to EN 50047
- Suitable for in-line mounting
- With pre-wired cable, cable length 5 m
- Actuator: Roller plunger with collar WR
- Actuating speed max. 0.5 m/s with a vertical actuating angle of 25°
- Metal roller
- Watertight collar for protection against penetration of dirt
- N.B.: Please state required approvals for Russia, China, Brazil and North America with your order!

Note

- Actuator can be repositioned by 90° on request

Dimensions

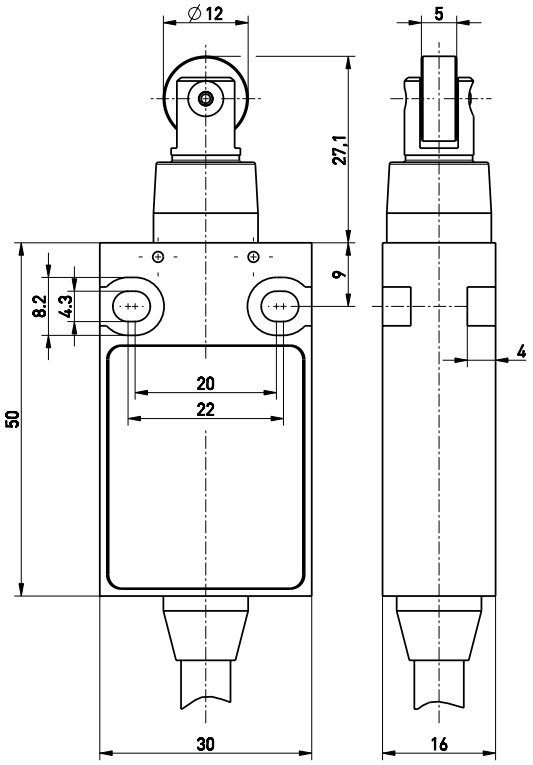

Technical data

Standards	EN 60947-5-1; EN 60079-0, EN 60079-1, EN 60079-31; EN ISO 13849-1; EN ISO 14119
Enclosure	glass-fibre reinforced, shock-proof thermoplastic, self-extinguishing UL 94-V0
Switch type	type 1
Coding level	no coding
Degree of protection	IP 65 to IEC/EN 60529
Contact material	silver
Switching system	slow action, positive break NC contacts ⊖
Switching elements	1 NC/1 NO contact, type Zb
Connection	cable H05VV-F, 4 x 0.75 mm²
B_{10d} (10 % Load)	2 million
T_M	max. 20 years
U_{imp}	4 kV
U_i	250 V
I_{the}	T6: 6 A, T5: 3 A
I_e/U_e	6 A/250 VAC; 0.25 A/230 VDC
Utilisation category	AC-15; DC-13
Max. fuse rating	6 A gG/gN fuse
Ambient temperature	T6: –20 °C ... +65 °C, T5: –20 °C ... +75 °C, +90 °C with max. 3 A
Mechanical life	> 1 million operations
Operation cycles	1800/h
Repeat accuracy of switching points	± 0.1 mm
Contact opening	max. 2 x 4 mm
Impact energy	max. 4 J
Ex marking	⟨Ex⟩ II 2G Ex d IIC T6/T5 Gb, ⟨Ex⟩ II 2D Ex tb IIIC T80 °C/T95 °C Db IECEx Ex d IIC T6/T5 Gb, Ex tb IIIC T80 °C/T95 °C Db
Approvals	PTB 03 ATEX 1070 X IECEx PTB 06.0098X

Errors and omissions excepted.

steute Schaltgeräte GmbH & Co. KG | Brückenstraße 91, 32584 Löhne, Germany | Telefon +49 (0) 5731 745-0 | Telefax +49 (0) 5731 745-200 | info@steute.com | www.steute.com

Ex position switch with safety function
Ex 14 WR 1Ö/1S - 5m
Material number: 1045393 (Material number old: 14010908)

Contact diagram

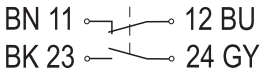

Switching diagram

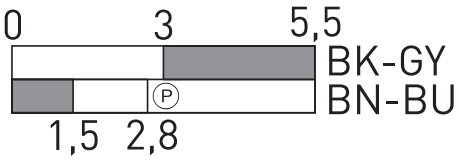

steute Schaltgeräte GmbH & Co. KG
Brückenstraße 91
32584 Löhne, Germany
Telefon +49 (0) 5731 745-0
Telefax +49 (0) 5731 745-200
info@steute.com
www.steute.com