E40240

Mounting adapter for flow sensors

ADAPT G2 FLANGE ADJUSTABLE

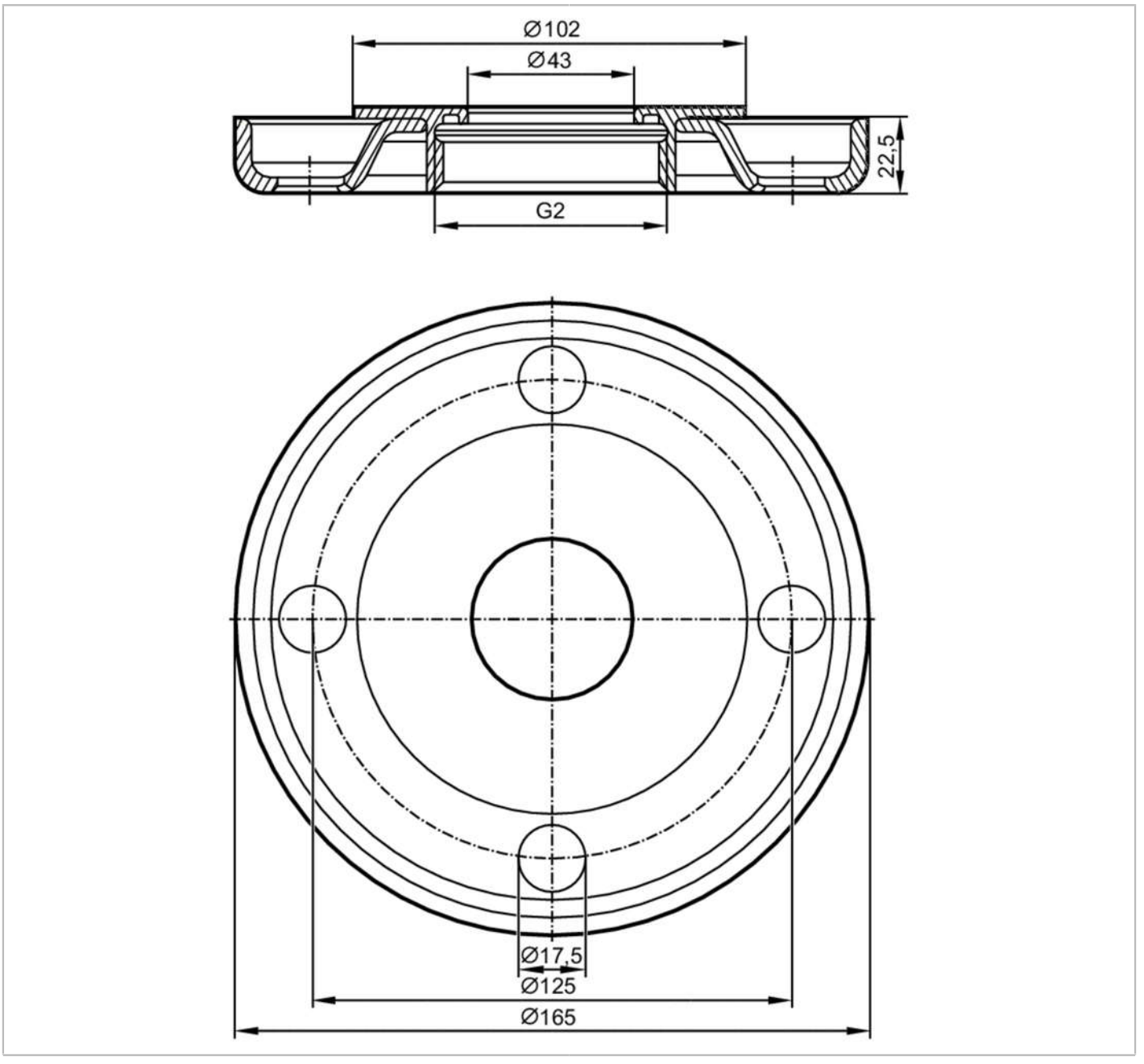

ACS

Application		
Design		for flow sensors Typ SM2, SM9
Installation		SM2 SM9
Pressure rating	[bar]	16
Mechanical data		
Weight	[g]	2255.5
Type of mounting		Adapter; (rotatable)
Materials		flange: stainless steel (1.4301 / 304); Adapter: stainless steel (1.4571/316Ti); O-ring: EPDM 47,22 x 3,53 mm
Sensor connection		G 2

E40240

Mounting adapter for flow sensors

ADAPT G2 FLANGE ADJUSTABLE

Process connection	flange DN50 according to DIN2642 / EN1092-1 type 2
Accessories	
Items supplied	O-rings: 2
Remarks	
Pack quantity	2 pcs.