TABLE 1

MOLEX P/N	ENG. NO.	CABLE LENGTH (mm)	LED
1202510019	BKB4000-FBW-05	5000	NO
1202510020	BKB4000-FBW-10	10000	NO
1202510021	BKB4000-FBW-15	15000	NO
1202510022	BKB400P-FBW-05	5000	YES
1202510023	BKB400P-FBW-10	10000	YES
1202510024	BKB400P-FBW-15	15000	YES
1202510025	BKB400N-FBW-05	5000	YES
1202510026	BKB400N-FBW-10	10000	YES
1202510027	BKB400N-FBW-15	15000	YES

TABLE 2 BILL OF MATERIAL

ITEM	DESCRIPTION	MATERIAL	FINISH
1	LABEL	ABS	WHITE
2	CABLE PLATE	PBT	BLACK
3	CABLE	TPU BASED	BLACK
4	CONTACT	BRONZE	GOLD OVER NICKEL
5	O-RING	FPM	RED
6	LED	NO LED = PA	BLACK
		WITH LED = PA	TRANSPARENT
7	SHELL	BRASS	NICKEL PLATED
8	HOUSING	PBT	BLACK



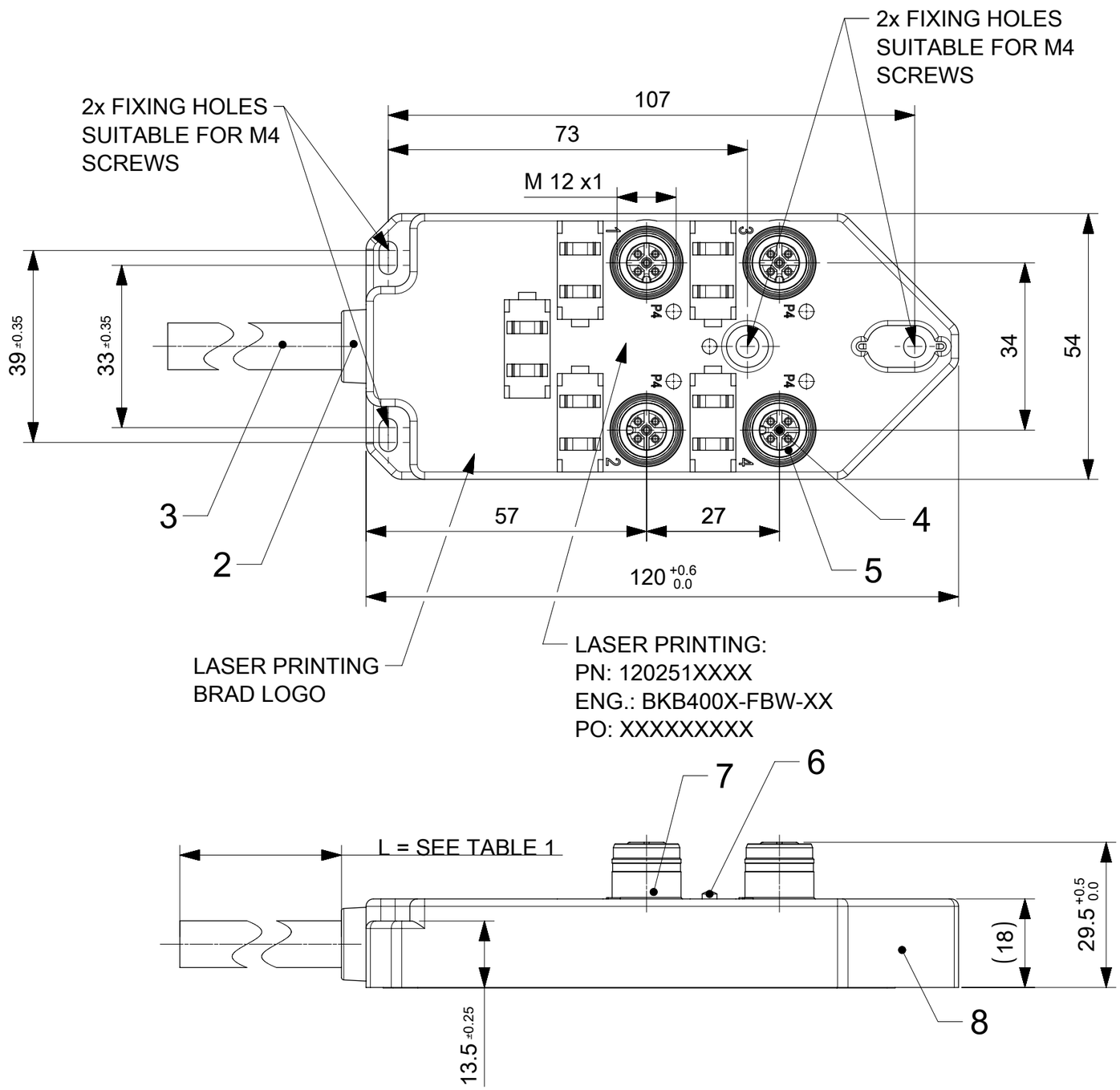

GENERAL CHARACTERISTICS:

ELECTRICAL AND MECHANICAL DATA ACC. TO IEC 61076-2-101

NOMINAL VOLTAGE:	10-30 V DC
AMPERE RATING:	4 A PER PORT / 12 A MAX
AMPERE RATING WITH UL REGISTRATION:	3 A PER PORT / 9 A MAX
IP DEGREE OF PROTECTION:	IP 67
TEMPERATURE RANGE:	-25°C to + 85°CC

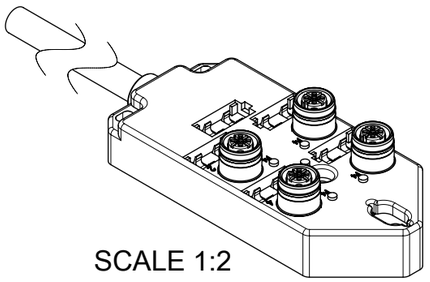

SYMBOLS	DIMENSION UNITS	SCALE
= 0	mm	1:1
= 0	GENERAL TOLERANCES (UNLESS SPECIFIED)	
= 0	ANGULAR TOL ± 1.0 °	
= 0	4 PLACES ±	
= 0	3 PLACES ±	
= 0	2 PLACES ± 0.05	
= 0	1 PLACE ± 0.3	
= 0	0 PLACES ± 0.5	
= 0	DRAFT WHERE APPLICABLE MUST REMAIN WITHIN DIMENSIONS	
= 0		

THIS DRAWING CONTAINS INFORMATION THAT IS PROPRIETARY TO MOLEX ELECTRONIC TECHNOLOGIES, LLC AND SHOULD NOT BE USED WITHOUT WRITTEN PERMISSION

CURRENT REV DESC: INITIAL RELEASE

EC NO: 631635
DRWN: MDHARMANTI 2020/01/27
CHK'D: RSILLER 2020/02/05
APPR: RSILLER 2020/02/05

INITIAL REVISION:
DRWN: SSM 2018/11/29
APPR: RSILLER 2020/01/17

THIRD ANGLE PROJECTION | DRAWING: A3-SIZE | SERIES: 120251

molex

MPIS U12 NON PNP NPN 4P 4PT
BK XM SINGLE

PRODUCT CUSTOMER DRAWING

DOCUMENT NUMBER	DOC TYPE	DOC PART	REVISION
1202510019	PSD	000	A1

MATERIAL NUMBER	CUSTOMER	SHEET NUMBER
SEE TABLE 1	GENERAL MARKET	1 OF 2

DOCUMENT STATUS	P1	RELEASE DATE	2020/02/05 10:52:01

FORMAT: master-lb-prod-A3
REVISION: H
DATE: 2018/01/18

Wiring Diagram NON LED Single

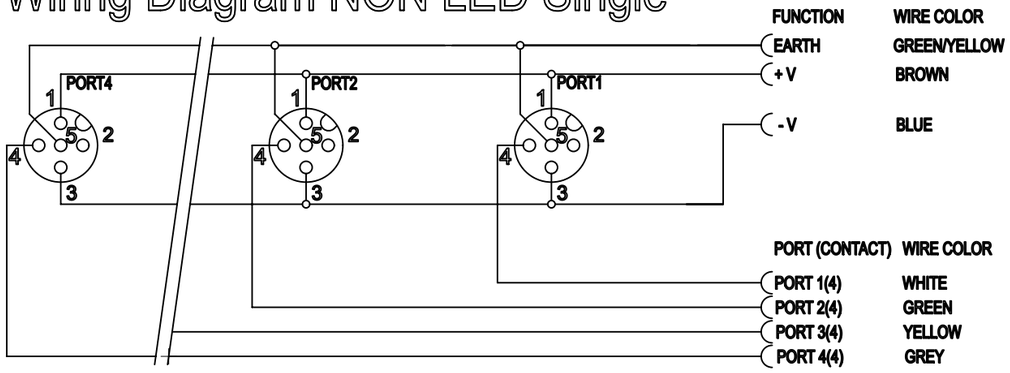

Wiring Diagram PNP Single

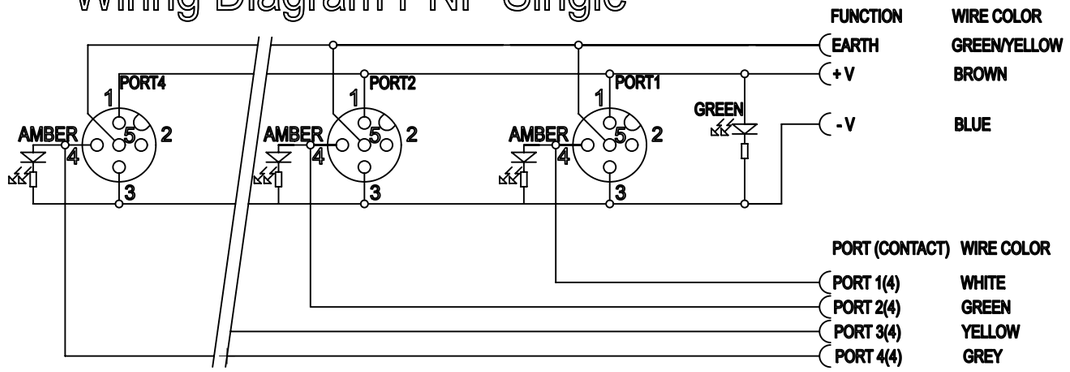

Wiring Diagram NPN Single

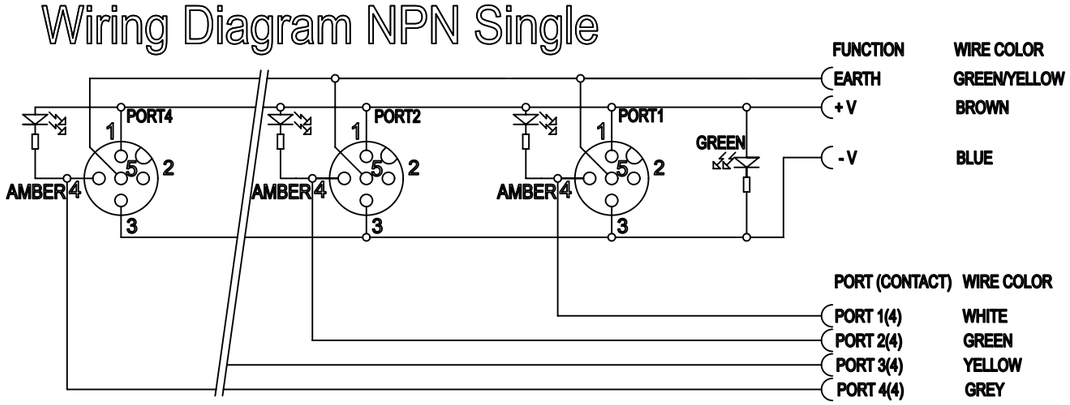

CABLE LENGTH TOLERANCES

LENGTH [m]	TOLERANCE [mm]
0-1	+40
>1-5	+60
>5-10	+80
>10-20	+140
>20-30	+160
>30	+1% length

THIS DRAWING CONTAINS INFORMATION THAT IS PROPRIETARY TO MOLEX ELECTRONIC TECHNOLOGIES, LLC AND SHOULD NOT BE USED WITHOUT WRITTEN PERMISSION

SYMBOLS: = 0

DIMENSION UNITS: mm | SCALE: 1:1

GENERAL TOLERANCES (UNLESS SPECIFIED)

ANGULAR TOL	± 1.0 °
4 PLACES	±
3 PLACES	±
2 PLACES	± 0.05
1 PLACE	± 0.3
0 PLACES	± 0.5

DRAFT WHERE APPLICABLE MUST REMAIN WITHIN DIMENSIONS

CURRENT REV DESC: INITIAL RELEASE

EC NO: 631635
DRWN: MDHARMANTI 2020/01/27
CHK'D: RSILLER 2020/02/05
APPR: RSILLER 2020/02/05

INITIAL REVISION:
DRWN: SSM 2018/11/29
APPR: RSILLER 2020/01/17

THIRD ANGLE PROJECTION | DRAWING: A3-SIZE | SERIES: 120251

molex

MPIS U12 NON PNP NPN 4P 4PT
BK XM SINGLE

PRODUCT CUSTOMER DRAWING

DOCUMENT NUMBER	DOC TYPE	DOC PART	REVISION
1202510019	PSD	000	A1

MATERIAL NUMBER	CUSTOMER	SHEET NUMBER
SEE TABLE 1	GENERAL MARKET	2 OF 2

DOCUMENT STATUS	P1	RELEASE DATE	2020/02/05 10:52:01

FORMAT: master-tb-prod-A3
REVISION: H
DATE: 2018/01/18