

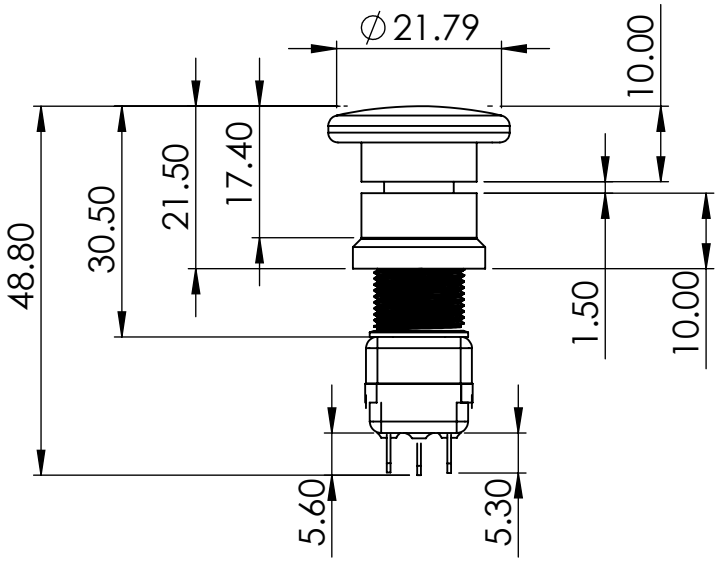

Part Number	Description
ASSY-03621	Plain Red push/pull switch - No Marking
ASSY-03622	Plain Black push/pull switch - No Marking
ASSY-03610	Red push/pull - Marked "EMERGENCY PULL"
ASSY-03611	Blue push/pull - Marked "CARDIAC PULL"
ASSY-03624	Plain Yellow push/pull - No Marking
ASSY-03625	Plain Green push/pull - No Marking
ASSY-03626	Plain Blue push/pull - No Marking

ALL DIMENSIONS IN MM
THIRD ANGLE PROJECTION
DO NOT SCALE DRAWING

TOLERANCES UNLESS OTHERWISE STATED:
1 DEC PLACE: ± 0.2
2 DEC PLACE: ± 0.1
3 DEC PLACE: ± 0.05
ANGULAR: ± 0.5 DEG

INSPECTION DIMENSION

CRITICAL DIMENSION

IF IN DOUBT, ASK ENGINEERING!

C/N No.	ISSUE	DETAILS	NAME	DATE
3488	01	FIRST ISSUE	O.R	10/11/2022

MATERIAL:

FINISH: SEE TABLE

DRAWN: O.R DATE: 10/11/2022

CHECK: C.N DATE: 29/11/2022

APEM COMPONENTS LTD.
UNIT A, GOODS IN GATE A/B | MOORSIDE ROAD | WINCHESTER | SO23 7US | UK
TEL: +44 (0)1962 859306 FAX: +44 (0)1962 859304

COPYRIGHT © OF APEM COMPONENTS LTD.
Any unauthorised distribution or disclosure is strictly prohibited unless with permission of the author

TITLE: **PUSH/PULL SWITCH ASSEMBLY**

DWG NO. ASSY-036XX

A4

PROJECT REF. #:

SCALE: 1:1

SHEET 1 OF 1