DEVR20 Series
HVDC Contactor 200A / 1000VDC



*Image is for illustrative purposes only. Please refer to datasheet for detail.

- Max. switching current = 2000A
- Contacts sealed in inert gas
- Magnet arc blowout
- Auxiliary contact option (mechanically linked)
- Female M6 or M8 Male power terminals
- Non-polarised (bi-directional) design
- Dual coil economiser (with TVS diode protection)

CE cULus UL E305753 RoHS Compliant

Contacts

Contact arrangement		SPST-NO-DM
Contact material		T2+Ag
Max. switching voltage	AC/DC	1000VDC
Rated load (resistive, cos φ=1)	DC1	200A 1000VDC (break only above 200A)
Max. continuous thermal current	600s	280A
	30s	900A
Max switching current	1 time only	2000A 450VDC
Initial contact resistance	max.	30mΩ (at 1A)
	typ.	1mΩ (at 1A)
Auxiliary contact (when fitted)	arrangement	SPST-NO (1 Form A)
	max. current	2A @ 30VDC / 3A @ 125VAC
	min. current	100mA @ 8VDC

Coil

Nominal voltage (see page 2)	DC	12VDC, 24VDC
Rated power consumption	hold	6W @ 12VDC

Insulation

Insulation resistance	initial	100MΩ (Min.)
	life end	50MΩ (Max.)
Dielectric strength	coil to contact	3500Vrms / 10mA / 1 min (at sea level)
	contact to contact	3500Vrms / 10mA / 1 min (at sea level)

General Data

Operate time at 23°C	max.	30ms
Bounce time at 23°C	max.	7ms
Release time at 23°C	max.	12ms
Electrical life	ops.	Voltage and current dependent - see fig. 1
Mechanical life	ops.	2 x 10^5

Environmental

Environmental Seal (Power Contacts)	IP	IP67
Ambient temperature	operating	-40 to +85°C
	storage	-70 to +150°C
Relative humidity		5 to 95%RH
Shock resistance		20g peak, 11ms 1/2 sine
Vibration resistance		20g sine peak (80 to 2000Hz)
Dimensions	L x W x H	58.20 x 80.48 (over flanges) x 72.11mm (max.)
Weight	approx.	470g ±10g

Ordering Code

D E V R 2 0 - 5 0 9 1 - S 8 - D 0 1 2 - R 1 / 3

Series

Contact material
50: T2+Ag

Contact arrangement
81: SPST-NO
91: SPST-NO+ Auxiliary

Mounting & terminations
Bottom flange mounting base
S8: M8 male stud power terminals
S9: M6 female power terminals
Coil & auxiliary contacts by flying leads

Coil code:
See table 1

Coil wire length
R: 15.75" (400mm)

Coil wire & auxiliary contact termination
1. None

*Other terminations to special order.

Version
/3: Version 3

DEVR20 12-Feb-25KS

Specifications are subject to change without notice. E&OE.

Coil Data — Table 1

Coil code	Nominal voltage (VDC)	Must operate voltage max. (VDC at 23°C)	Max. allowable voltage (VDC)	Must release voltage min. (VDC)	Inrush Current Max. (A)	Holding Current (Average)	Rated Coil Power (W at 23°C)
D012	12.0	9.0	14.7	1.2	3.8	420mA @ 12VDC	5W @ 12VDC
D024	24.0	18.0	28.0	2.4	2.0	200mA @ 24VDC	5W @ 24VDC

Dual coil, product has been configured with coil surge absoption circuit, engineers do not need to configure.

Electrical Performance — Fig. 1

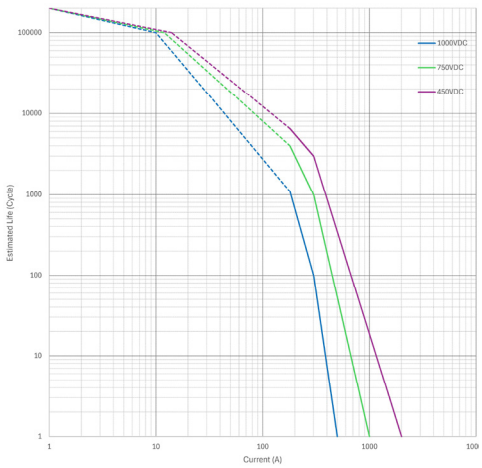

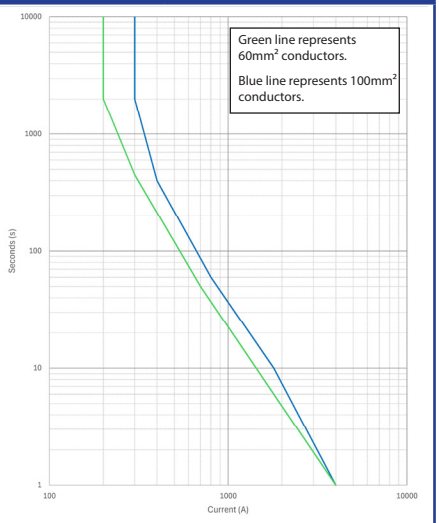

1. Estimates are based on test and extrapolated data (extrapolated data can be seen with dotted line). The user is advised to confirm performance in their application.
2. Recommended conductor size and terminal temperature rise maximum in accordance with ISO (EN) 60947.1 70°C.
3. Estimated electrical life is based on make and break current. Break only above 400A.
4. All data is based on resistive loads.

Circuit Diagram — Fig. 2

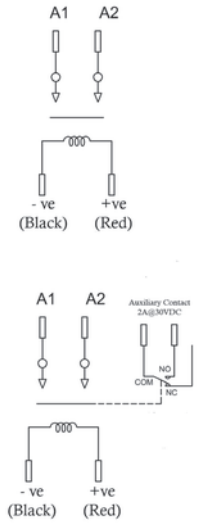

Note: Coil is polarised.

Dimensions — Fig. 3

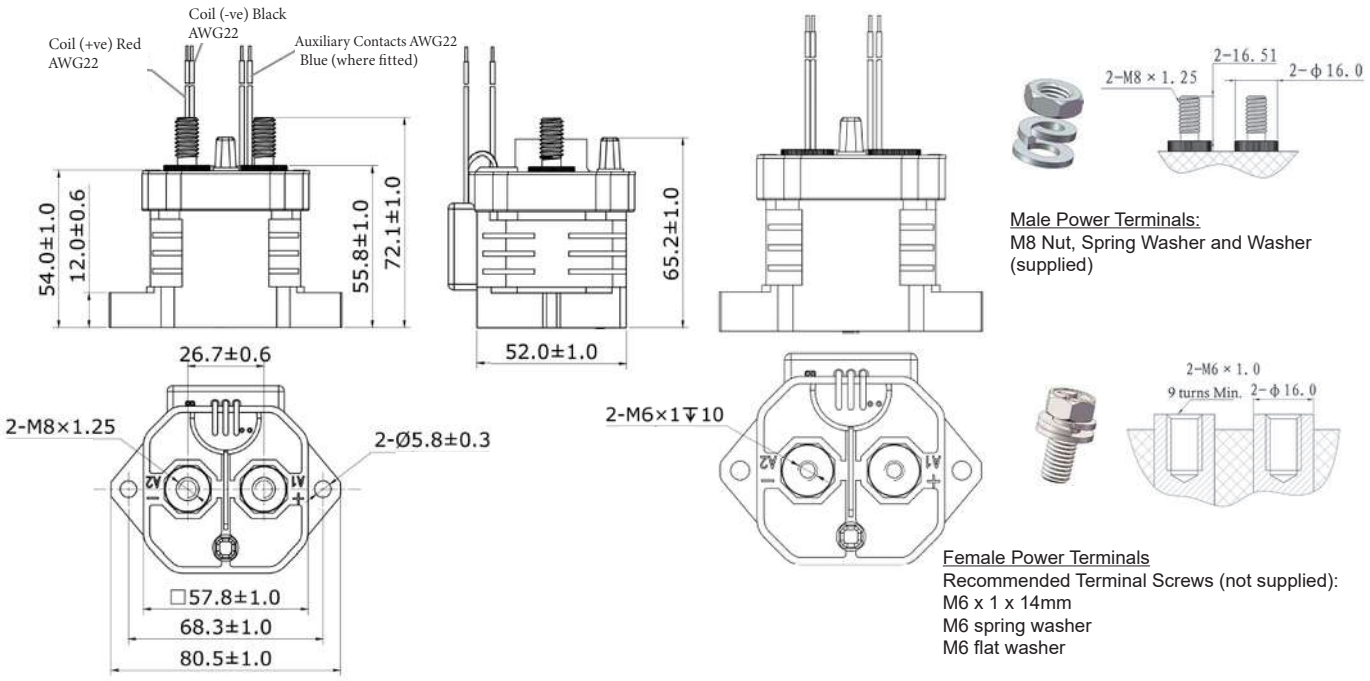

Male Power Terminals:
M8 Nut, Spring Washer and Washer (supplied)

Female Power Terminals
Recommended Terminal Screws (not supplied):
M6 x 1 x 14mm
M6 spring washer
M6 flat washer

Recommended conductor
Minimum: 60mm²
Preferred: 100mm²

Torque settings
Terminals: 9.0 - 12.0Nm
Base Mounting: 1.7 - 4.0Nm

Notes:
1: Nominal dimensions in mm.
2: Tolerances (nominal), <10mm: ± 0.3mm, 10 ~ 50mm: ± 0.6mm, >50mm: ± 1.0mm.
3: Coil wire length and terminations can be customised upon request.

Specifications are subject to change without notice. E&OE.