Product data sheet
Characteristics

XS7F1A1PAL01M8
inductive sensor XS7 15x32x8 - PBT - Sn5mm - 12..24VDC - M8 0.15m



Main

Range of product	Telemecanique Inductive proximity sensors XS
Series name	General purpose
Sensor type	Inductive proximity sensor
Device application	-
Sensor name	XS7
Sensor design	Flat form 15 x 32 x 8
Size	8 mm
Body type	Fixed
Detector flush mounting acceptance	Flush mountable
Material	Plastic
Enclosure material	PBT
Type of output signal	Discrete
Wiring technique	3-wire
Discrete output function	1 NO
Output circuit type	DC
Discrete output type	PNP
Electrical connection	3 pins M8 remote male connector
Cable length	0.15 M
[Us] rated supply voltage	12...24 V DC with reverse polarity protection
Switching capacity in mA	<= 100 mA DC with overload and short-circuit protection
IP degree of protection	IP68 conforming to IEC 60529

Complementary

Detection face	Frontal
Front material	PBT
Operating zone	0…4 Mm
Differential travel	1...15% of Sr
Wire insulation material	PvR
Status LED	Output state: 1 LED (yellow)
Supply voltage limits	10…36 V DC
Switching frequency	<= 2000 Hz
Maximum voltage drop	<2 V (closed)
Current consumption	<= 10 mA no-load
Maximum delay first up	5 Ms
Maximum delay response	0.1 Ms

The information provided in this documentation contains general descriptions and/or technical characteristics of the performance of the products contained herein.
This documentation is not intended as a substitute for and is not to be used for determining suitability or reliability of these products for specific user applications.
It is the duty of any such user or integrator to perform the appropriate and complete risk analysis, evaluation and testing of the products with respect to the relevant specific application or use thereof.
Neither Schneider Electric Industries SAS nor any of its affiliates or subsidiaries shall be responsible or liable for misuse of the information contained herein.

Maximum delay recovery	0.1 Ms
Marking	CE
Depth	8 Mm
Height	32 Mm
Width	15 Mm
Net weight	0.045 Kg

Environment

Product certifications	C-Tick CSA UL
Ambient air temperature for operation	-25…70 °C
Ambient air temperature for storage	-40…85 °C
Vibration resistance	25 gn amplitude = +/- 2 mm (f = 10…55 Hz) conforming to IEC 60068-2-6
Shock resistance	50 gn for 11 ms conforming to IEC 60068-2-27

Packing Units

Package 1 Weight	0.030 Kg
Package 1 Height	0.420 Dm
Package 1 width	0.970 Dm
Package 1 Length	0.670 Dm

Offer Sustainability

Sustainable offer status	Green Premium product
REACh Regulation	REACh Declaration
EU RoHS Directive	Pro-active compliance (Product out of EU RoHS legal scope) EU RoHS Declaration
Mercury free	Yes
RoHS exemption information	Yes
Environmental Disclosure	Product Environmental Profile

Contractual warranty

Warranty	18 months

XS7F1A1PAL01M8

Dimensions

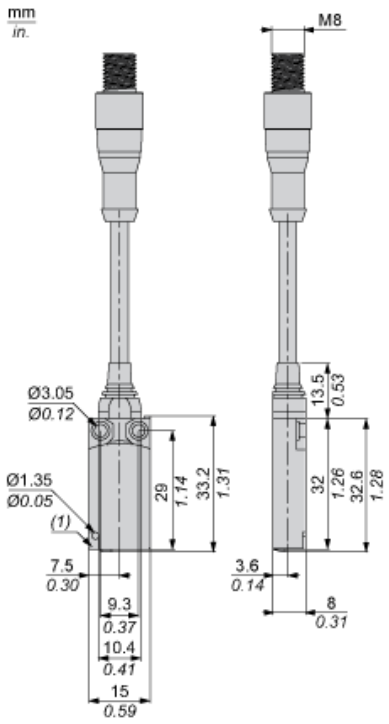

(1) LED

Setting-up

Minimum Mounting Distances (mm)

Side by Side

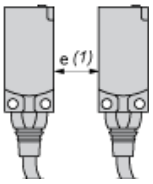

e (1) ≥15

Face to Face

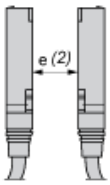

e (2) ≥40

Facing a Metal Object

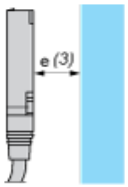

e (3) ≥15

Wiring Schemes

PNP

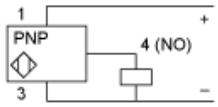

M8

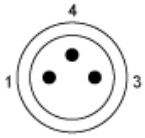

Product Life Status :	Commercialised