GF711S

Fail-safe inductive sensor

GIFA4004-2PS/SIL2/V4A/US

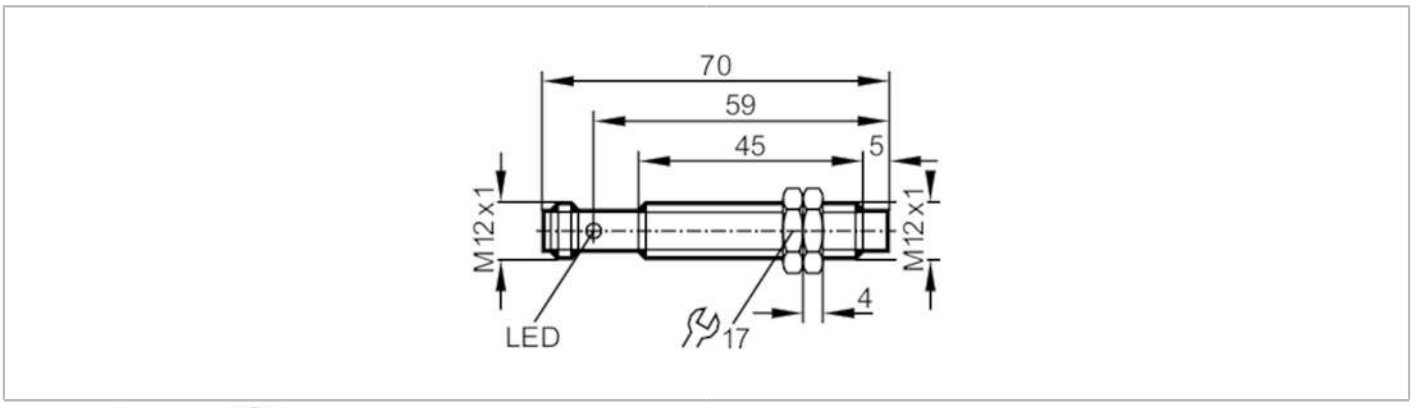

Product characteristics		
Electrical design		PNP
Output function		2 x OSSD (A1 and A2)
Enable zone	[mm]	0.5...4
Housing		threaded type
Dimensions	[mm]	M12 x 1 / L = 70
Application		
Special feature		Gold-plated contacts
Type of operation		continuous operation (maintenance-free)
Safety-related function		safe state when undamped
Application		industrial application
Electrical data		
Operating voltage	[V]	19.2...30 DC
Rated insulation voltage	[V]	30
Current consumption	[mA]	< 20
Protection class		III
Reverse polarity protection		yes
Max. power-on delay time	[ms]	1000
Outputs		
Electrical design		PNP
Output function		2 x OSSD (A1 and A2)
Max. voltage drop switching output DC	[V]	2.5; (30 mA)
Permanent current rating of switching output DC	[mA]	100
Output data		Interface type C class 1
Output voltage at 24 V		compatible with EN 61131-2 inputs type 1, 2
Short-circuit protection		yes
Overload protection		no
Max. capacitive load CL_max	[nF]	20
Detection zone		
Enable zone	[mm]	0.5...4

GF711S

Fail-safe inductive sensor

GIFA4004-2PS/SIL2/V4A/US

Safe switching-off distance s(ar)	[mm]	6
Response times		
Response time to safety request	[ms]	1
Response time when approaching the enable zone	[ms]	1
Risk time (response time for safety-related faults)	[ms]	20
Operating conditions		
Applications		class C to EN 60654-1 weatherproof application
Ambient temperature	[°C]	-25...70
Note on ambient temperature		operational life ≤ 87600 h
Ambient temperature	[°C]	10...40
Note on ambient temperature		operational life ≤ 175200 h
Rate of temperature change	[K/min]	0.5
Max. relative air humidity	[%]	briefly: 5...95 %; permanent: 5...70 %
Air pressure	[kPa]	80...106
Max. height above sea level	[m]	2000
Ionising radiation		not permissible
Salt spray		no
Protection		IP 65; IP 67

Tests / approvals		
EMC	IEC 60947-5-2	
	IEC 60947-5-3	
	EN 60947-5-3	
	EN 61000-4-2 ESD	6 kV CD / 8 kV AD
	EN 61000-4-3 HF radiated	20 V/m
	EN 61000-4-4 Burst	2 kV
	EN 61000-4-6 HF conducted	10 V
	EN 61000-4-8	30 A/m
	EN 55011	class B
Shock resistance	IEC 60947-5-2	
Vibration resistance	IEC 60947-5-2	

Safety classification		
Complies with the requirements		ISO 13849-1: 2015 category 2, PL d
		IEC 61508 SIL 2
		IEC 62061 SIL 2
Mission time TM	[h]	≤ 175200
Mission time TM (additional indication)		20 years
PFH	[1/h]	1,0E-07
Mechanical data		
Weight	[g]	105.5
Housing		threaded type
Mounting		non-flush mountable
Dimensions	[mm]	M12 x 1 / L = 70

GF711S

Fail-safe inductive sensor

GIFA4004-2PS/SIL2/V4A/US

Thread designation	M12 x 1	
Materials	stainless steel (1.4404 / 316L); PBT	
Displays / operating elements		
Display	operation	1 x LED, green
	signal	1 x LED, yellow
Accessories		
Items supplied	lock nuts: 2	
Remarks		
Remarks	Unless stated otherwise, all data refer to the reference target plate to IEC 60947-5-2 over the whole temperature range.	
	(FE360 = ST37K) 12x12x1 mm	
Pack quantity	1 pcs.	

Electrical connection - plug

Connector: 1 x M12; coding: A; Contacts: gold-plated



Connection

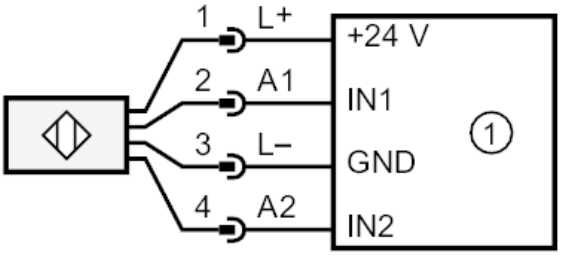

1: safety-related logic unit