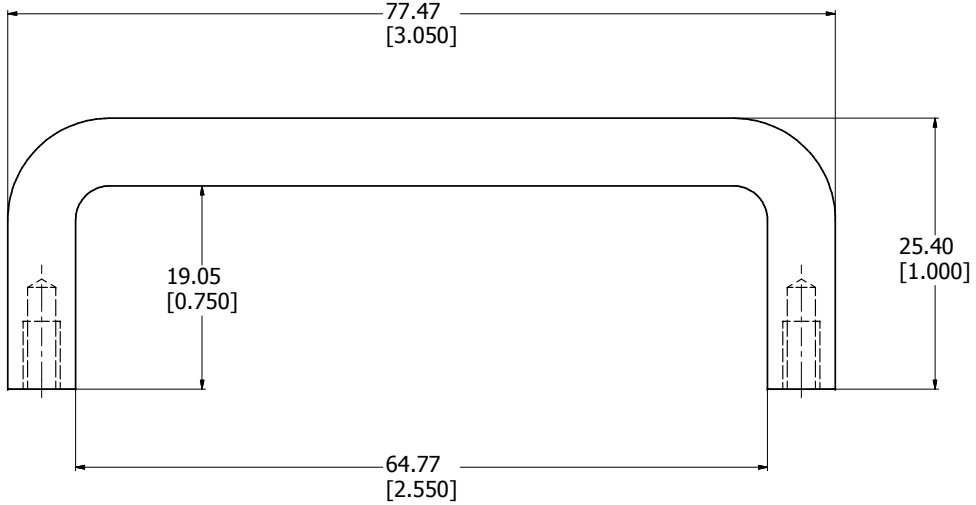

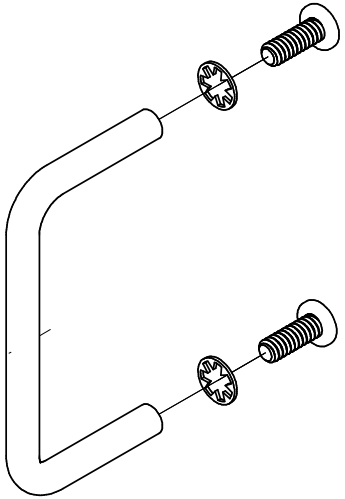

TYPICAL HANDLE ASSEMBLY

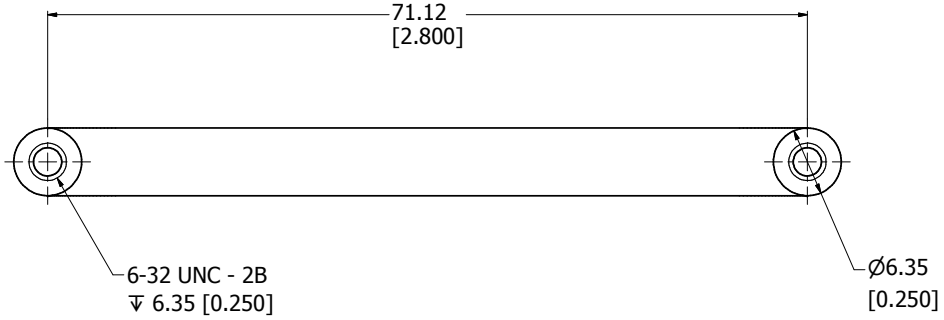

1427P
Handle Material - CR Steel
Finish - Bright Chrome Plated (1427P)
- E-Black Coating (1427P1BK-1)
Hardware
2 Screws - Panhead 6-32 x 3/8"
2 Internal Tooth Lockwashers
**note handle sold singly

HAMMOND MANUFACTURING™

1427P****