120x120x25 mm

SUNON

46-80 CFM



Model	P/N	Bearing ● VAPO ○ BALL ⊙ Sleeve	Rating Voltage (VAC)	Freq. (Hz)	Power Current (AMP)	Power Consumption (WATTS)	Speed (RPM)	Air Flow (CFM)	Static Pressure (Inch-H_2O)	Noise (dBA)	Weight (g)
SP101AT	1122HSL.GN	⊙	115	50/60	0.21/0.19	19/18	2000/2300	64/78	0.13/0.16	43/46	330
SP101AT	1122HST.GN	⊙	115	50/60	0.21/0.19	19/18	2000/2300	64/78	0.13/0.16	43/46	330
SP103AT	1122LSL.GN	⊙	115	50/60	0.14/0.13	14/13	1600/1800	46/53	0.11/0.12	35/38	330
SP103AT	1122LST.GN	⊙	115	50/60	0.14/0.13	14/13	1600/1800	46/53	0.11/0.12	35/38	330
SP101AT	1122HBL.GN	○	115	50/60	0.21/0.19	19/18	2150/2500	66/80	0.14/0.17	44/48	330
SP101AT	1122HBT.GN	○	115	50/60	0.21/0.19	19/18	2150/2500	66/80	0.14/0.17	44/48	330
SP103AT	1122LBL.GN	○	115	50/60	0.12/0.11	12.5/11.5	1700/1900	47/54	0.12/0.13	37/40	330
SP103AT	1122LBT.GN	○	115	50/60	0.12/0.11	12.5/11.5	1700/1900	47/54	0.12/0.13	37/40	330

Frame : Aluminum alloy

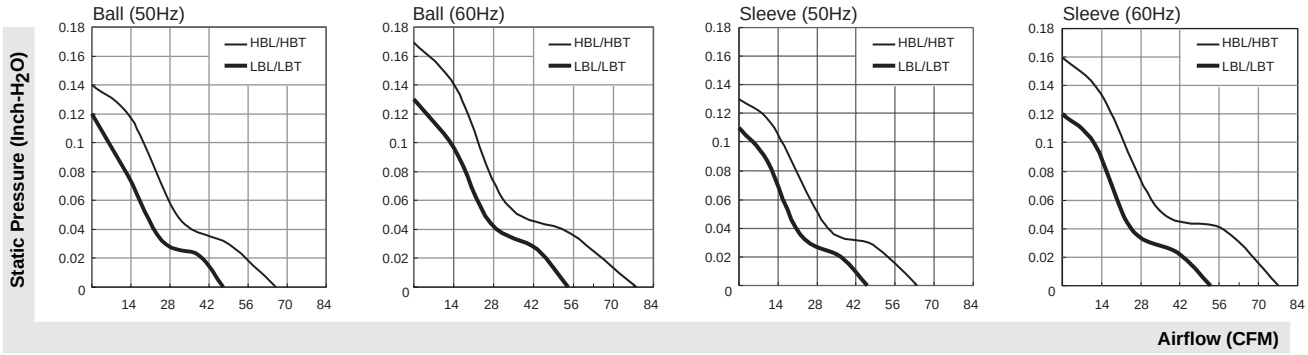

UNITS:mm

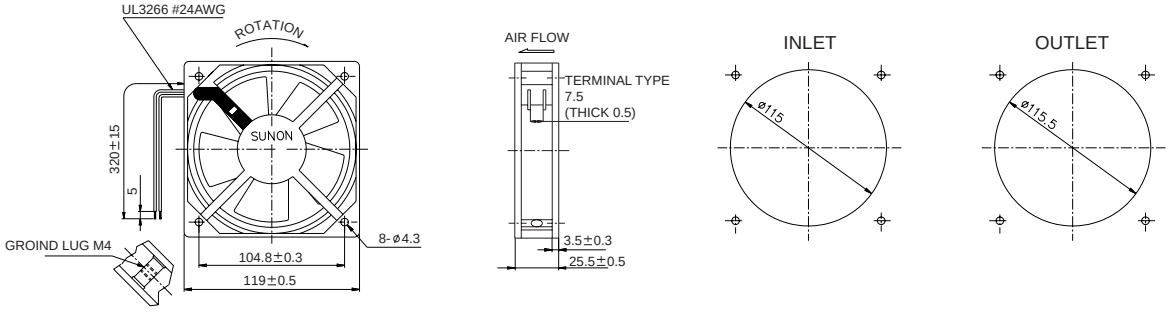

*All model could be customized on voltage or any other requirements to fit your need.
*Specifications subject to change without notice. Please Visit SUNON web site at http://www.sunon.com for update information.