GEFRAN

MELT PRESSURE TRANSMITTERS

MN SERIES *Voltage output*

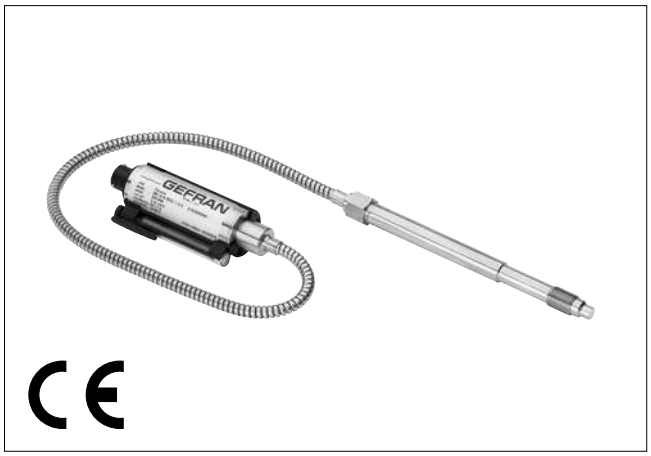

The MN series of Gefran, are pressure transmitters for using in High temperature environment.
The main characteristic of this series is the capability to read temperature of the media up to 400°C.
The constructive principle is based on the hydraulic trasmission of the pressure.
The fluid-filled system assures the temperature stability.
The phisical measure is transformed in a electrical measure by means the strain-gauge technology.

MAIN FEATURES

- Pressure ranges from:
  0-35 to 0-2000 bar / 0-500 to 0-30000 psi
- Accuracy: < ±0.25% FSO (H); < ±0.5% FSO (M)
- Fluid-filled system for temperature stability
- Mercury filling volume:
  MN0 (30mm³); MN1, MN2, MN3 (40mm³)
- 1/2-20UNF, M18x1.5 standard threads; other types available on request
- Other diaphragms available on request
- Autozero function on board / external option
- Drift Autocompensation function (SP version)
- Standard diaphragm is 15-5 PH stainless steel with GTP+ coating
- 17-7 PH corrugated diaphragm with GTP+ coating for ranges below 100 bar-1500 psi

GTP+ (advanced protection)
Coating with high resistance against corrosion, abrasion and high temperature

AUTOZERO FUNCTION

All signal variations in the absence of pressure can be eliminated by using the Autozero function.
This function is activated by closing a magnetic contact located on the transmitter housing.
The procedure is permitted only with pressure at zero.

AUTOCOMPENSATES INFLUENCE OF MELT TEMPERATURE

Thanks to internal self-compensation, the MSP series transmitter cancels the effect of pressure signal variation caused by variation of Melt temperature.
This reduces at the minimum the read error caused by heating of the filling fluid (typical of all sensors built with "filled" technology).

TECHNICAL SPECIFICATIONS

Accuracy (1)	**H** <±0.25%FSO (100...2000 bar) **M** <±0.5%FSO (35...2000 bar)
Resolution	Infinite
Measurement range	0..35 to 0..2000bar 0..500 to 0..30000psi
Maximum overpressure (without degrading performances)	2 x FS 1.5 x FS above 1000bar/15000psi
Measurement principle	Extensimetric
Power supply	15...30Vdc N, C 10...30Vdc B, M -15...+15Vdc H, L
Maximum current absorption	25mA
Insulation resistance (at 50Vdc)	>1000 MOhm
Output signal Full Scale (FSO)	5Vdc (M, H) - 10Vdc (N, L) 5,1Vdc (B) - 10,1Vdc (C)
Zero balance (tollerance ± 0.25% FSO)	0Vdc (M, N, H, L) 0.1Vdc (B, C)
Zero signals adjustment (tollerance ± 0.25% FSO)	"Autozero" function
Span adjustment within ± 5% FSO	See Manual
Maximum allowed load	1mA
Response time (10...90% FSO)	~ 1ms
Output noise (RMS 10-400Hz)	< 0.025% FSO
Calibration signal	80% FSO
Output short circuit ingress and reverse polarity protection	YES
Compensed temperature range	0...+85°C
Operating temperature range	-30...+105°C
Storage temperature range	-40...+125°C
Thermal drift in compesated range: Zero / Calibration / Sensibility	< 0.02% FSO/°C
Diaphragm maximum temperature	400°C / 750°F
Zero drift due to change in process temperature (zero)	0.02 bar/°C
Zero drift temperature for Autocompensated version (SP) within the temperature range 20°C-400°C inclusive the drift temperature of the housing	< 0.003 bar/°C 100 ≤ p < 500 bar 0.0014 %FS/°C p ≥ 500 bar
Standard material in contact with process medium	Diaphragm: • 15-5 PH with GTP+ coating • 17-7 PH corrugated diaphragm with GTP+ coating for ranges <100 bar(1500psi) Stem: • 17-4 PH
Thermocouple (model MN2)	STD: type "J" (isolated junction)
Protection degree (6-pole female connect)	IP65

FSO = Full scale output: (1) BFSL method (Best Fit Straight Line): includes combined effects of Non-Linearity, Hysteresis and Repeatability.

MECHANICAL DIMENSIONS

MN0

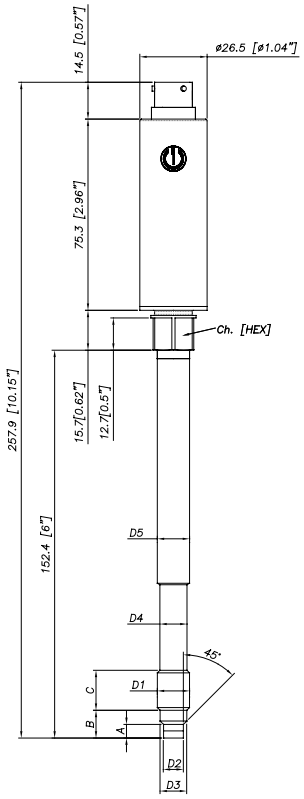

D1	1/2 - 20UNF
D2	ø7.8 -0.05 [ø0.31" -0.002]
D3	ø10.5 -0.025 [ø0.41" -0.001]
D4	ø10.67 [ø0.42"]
D5	ø12.7 [ø0.5"]
A	5.56 -0.26 [0.22" -0.01]
B	11.2 [0.44"]
C	15.74 [0.62"]
Ch [Hex]	16 [5/8"]

MN2

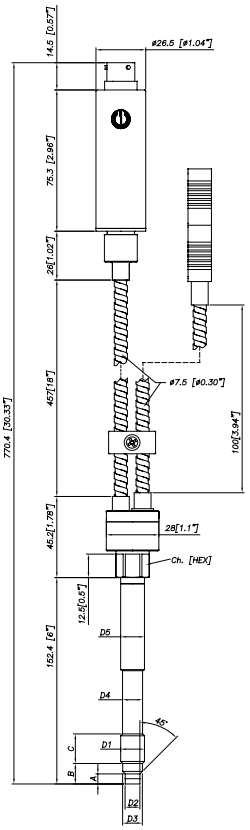

MN1

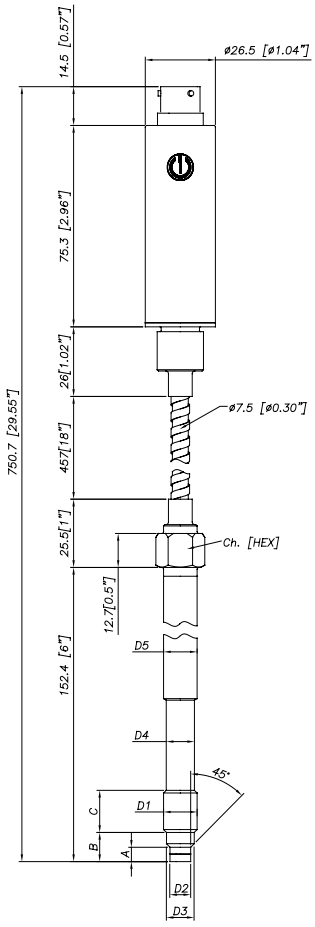

D1	M18x1.5
D2	ø10 -0.05 [ø0.394" -0.002]
D3	ø16 -0.08 [ø0.63" -0.003]
D4	ø16 -0.4 [ø0.63" -0.016]
D5	ø18 [ø0.71"]
A	6 -0.26 [0.24" -0.01]
B	14.8 -0.4 [0.58" -0.016]
C	19 [0.75"]
Ch [Hex]	19 [3/4"]

MN3

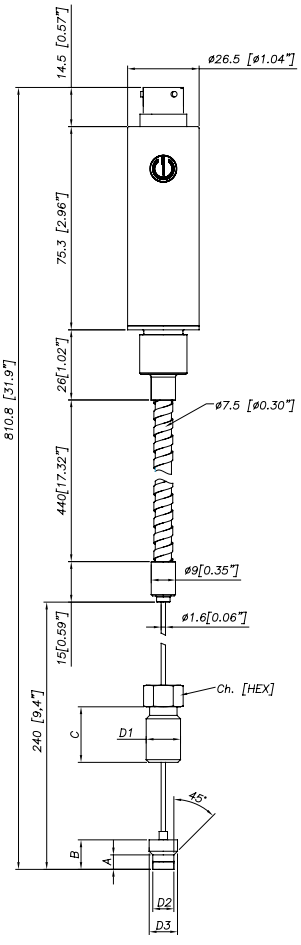

Capillare esposto Exposed capillary	
D1	1/2-20UNF
D2	.307/.305" [7.80/7.75mm]
D3	.414/.412" [10.52/10.46mm]
A	.125/.120" [3.18/3.05mm]
B	.318/.312" [8.08/7.92mm]
C	.81" [20.6mm]

NOTE : dimensions refer to rigid stem length option "4" (153 mm – 6")

WARNING : For installation use a maximum tightening torque of 56 Nm(500 in-lb)

ELECTRICAL CONNECTIONS

VOLTAGE OUTPUT (M, N, B, C)

Power supply 15..30Vdc

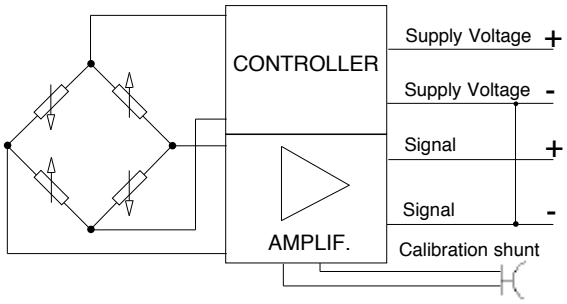

MAGNETIC AUTOZERO

6-pin
C
D
A
B
E - F

Shield drain wire is tied to connector via cable clamp

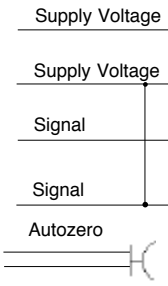

EXTERNAL AUTOZERO

6-pin
C
D
A
B
E - F

6 pin connector
VPT07RA10-6PT2
(PT02A-10-6P)

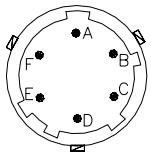

8 pin connector
PC02E-12-8P Bendix

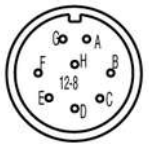

VOLTAGE OUTPUT (H, L)

Power supply -15..+15Vdc (*)

(*) The pin B of the connector must be connected to the common of the ± 15Vdc supply

8-pin connector

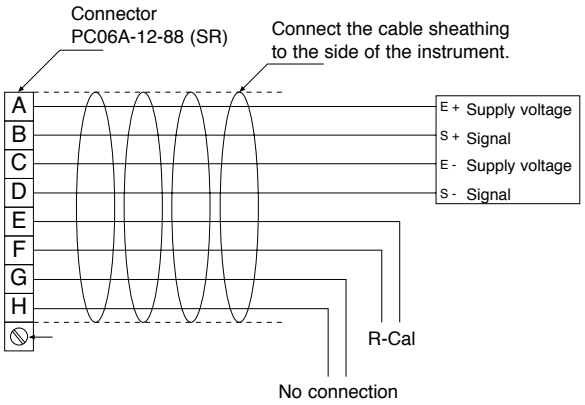

Magnetic Autozero version
A = Excitation + (white)
B = Signal + (red)
C = Excitation - (green)
D = Signal - (black)
E = R-Cal (blue)
F = R-Cal (brown)
G = no connection
H = no connection

External Autozero version
A = Excitation + (white)
B = Signal + (red)
C = Excitation - (green)
D = Signal - (black)
E = Autozero (blue)
F = Autozero (brown)
G = no connection
H = no connection

AUTOZERO FUNCTION

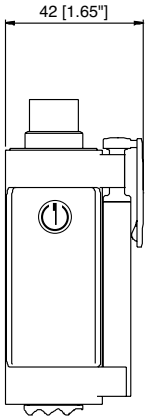

The Autozero function is activated through a magnetic contact (external magnet supplied with the sensor).
See the manual for a complete Autozero function explanation.

ACCESSORIES

Connectors

6-pin mating connector (IP65 protection degree)	**CON300**
8-pin mating connector	**CON307**

Extension cables

6-pin connector with 8m (25ft) cable	**C08WLS**
6-pin connector with 15m (50ft) cable	**C15WLS**
6-pin connector with 25m (75ft) cable	**C25WLS**
6-pin connector with 30m (100ft) cable	**C30WLS**
8-pin connector with 8m (25ft) cable	**E08WLS**
8-pin connector with 15m (50ft) cable	**E15WLS**
8-pin connector with 25m (75ft) cable	**E25WLS**
8-pin connector with 30m (100ft) cable	**E30WLS**
Other lengths	**consult factory**

Accessories

Mounting bracket	**SF18**
Dummy plug for 1/2-20UNF	**SC12**
Dummy plug for M18x1.5	**SC18**
Drill kit for 1/2-20UNF	**KF12**
Drill kit for M18x1.5	**KF18**
Cleaning kit for 1/2-20UNF	**CT12**
Cleaning kit for M18x1.5	**CT18**
Fixing pen clip	**PKIT309**
Autozero pen	**PKIT312**

Thermocouple for MN2 model

Type “J” (153mm - 6” stem)	**TTER 601**

Cable color code 6 wires	
Conn.	**Wire**
A	Red
B	Black
C	White
D	Green
E	Blue
F	Orange

Cable color code 8 wires	
Conn.	**Wire**
A	White
B	Red
C	Green
D	Black
E	Blue
F	Orange
G	n.c.
H	n.c.

ORDER CODE

M -□-□-□-□-□-□□□□-□-□-□-□-**000**

Autocompensation (*)	**SP**
Standard	**-**

(*) available for ranges > to 100bar
(*) not available with MN3 version

OUTPUT SIGNAL	
0 .. 5Vdc	**M**
0 .. 10Vdc	**N**
0.1 .. 5.1Vdc	**B**
0.1 .. 10.1Vdc	**C**
0 .. 5Vdc (supply -15...+15Vdc)	**H**
0 .. 10Vdc (supply -15...+15Vdc)	**L**

CONFIGURATION	
Rigid stem	**0**
Rigid stem + flexible	**1**
With thermocouple	**2**
Exposed capillary	**3**

CONNECTOR	
Standard	
6 pin	**6**
8 pin	**8**

ACCURACY CLASS	
0.25% FSO (ranges ≥ 100 bar/1500 psi)	**H**
0.5% FSO	**M**

RANGE			
bar		psi	
35	**B35U**	**500**	**P05C**
50	**B05D**	**750**	**P75D**
70	**B07D**	**1000**	**P01M**
100	**B01C**	**1500**	**P15C**
200	**B02C**	**3000**	**P03M**
350	**B35D**	**5000**	**P05M**
500	**B05C**	**7500**	**P75C**
700	**B07C**	**10000**	**P10M**
1000	**B01M**	**15000**	**P15M**
1400	**B14C**	**20000**	**P20M**
2000	**B02M**	**30000**	**P30M**

000= Standard version
Special or customized versions available on request

E	External autozero
-	Magnetic autozero

FLEXIBLE LENGTH (mm / inches)		
Standard (MN0)		
0	none	
Standard (MN1, MN2)		
D	457mm	18”
E	610mm	24”
F	760mm	30”
Standard (MN3)		
L	711mm	28”
Available on request		
A	76mm	3”
B	152mm	6”
C	300mm	12”
G	914mm	36”
H	1067mm	42”
I	1220mm	48”
J	1372mm	54”
K	1520mm	60”

RIGID STEM LENGTH (mm / inches)		
Standard (MN0, MN1, MN2)		
4	153mm	6”
5	318mm	12.5”
Standard (MN3)		
0	none	
Available on request		
1	38mm	1.5”
2	50mm	2”
3	76mm	3”
6	350mm	14”
7	400mm	16”
8	456mm	18”

THREAD	
Standard	
1	1/2 - 20 UNF
4	M18 x 1.5

Examples

MN2-6-M-B07C-1-4-D-000

Melt pressure transmitter with type “J” thermocouple, 0..10Vdc output, 6-pin connector, 1/2-20UNF thread, 700 bar full scale, 0,5% accuracy class, 153 mm (6”) rigid stem, 457mm (18”) flexible capillary.

MSPM0-6-M-P03M-1-4-0-000

Melt pressure transmitter autocompensated version, rigid stem, 0..10Vdc output, 6-pin connector, 1/2-20UNF thread, 3000 psi full scale, 0,5% accuracy class, 153 mm (6”) rigid stem.

Sensors are manufactured in compliance with:

- EMC compatibility directive

Product designed and available in compliance with Directive 2011/65/EU (RoHS II) only for large-scale stationary installation or industrial tools, or for B-to-B laboratory equipments for R&D purposes

Electrical installation requirements and Conformity certificate are available on our web site: www.gefran.com

GEFRAN reserves the right to make any kind of design or functional modification at any moment without prior notice.

GEFRAN spa
via Sebina, 74
25050 PROVAGLIO D’ISEO (BS) - ITALIA
tel. 0309888.1 - fax. 0309839063
Internet: http://www.gefran.com