E89080

Mounting base

S-LED/Pole mounting bracket

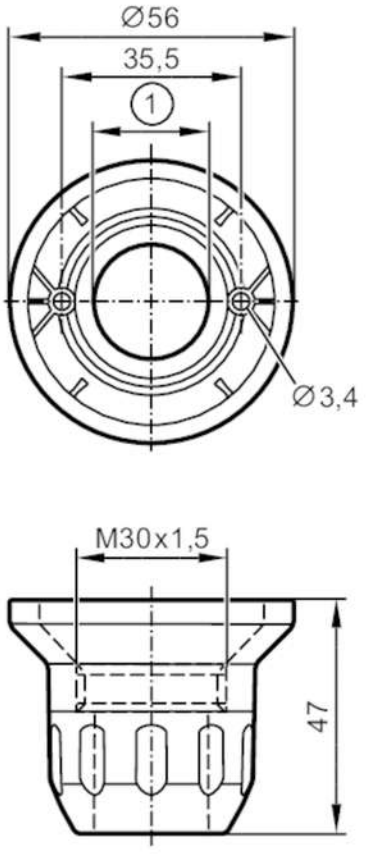

1 supplied seal suited for pipes with a diameter of 22 mm or 25 mm

Mechanical data		
Weight	[g]	58.5
Dimensions	[mm]	Ø 56 / L = 35
Materials		polycarbonate-ABS black

Accessories	
Accessories (optional)	mounting base, E89060
	wall bracket, E89061
	bracket with lateral cable entry, E89064
	mounting tube, E89065
	mounting tube, E89066
	mounting tube, E89067

Remarks	
Pack quantity	1 pcs.

E89080

Mounting base

S-LED/Pole mounting bracket

Diagrams and graphs

base mounting

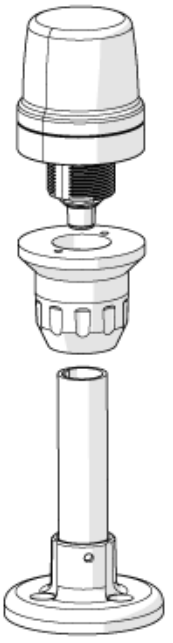

wall mounting

