PYRO® CONTROLE
CHAUVIN ARNOUX GROUP

STATOP

Solutions for your temperature control requirements







- **Over 200 referenced models**
- **1 or 2 inputs, fixed or universal: Pt 100 Ω, all types of thermocouples, current and voltage**
- **ON-OFF or PID control, self-adapting and fuzzy logic**



Glossary of temperature control terms

A

Alarm
Condition or control function that indicates when the process is above or below set-up point.

B

Bandwidth
Symmetrical zone around the setpoint where a proportional control takes place.

C

Cold-joint compensation
Device that prevents ambient temperature changes from affecting the cold joint of a thermocouple.

Control algorithm
Method used by the control device to bring the system's temperature back to the setpoint. ON-OFF,
Proportional and PID are the most common algorithms.

D

Dead zone
1 – For graphic recorders: minimum change of input signals necessary to generate a deviation of the pen.

2 – For temperature controllers (in °C): temperature zone where heating is interrupted during temperature increase and reactivated when temperature decreases. Zone in which no heating occurs (or no cooling for hot-cold action).

Derivative action (D)
Control function that measures the speed at which the system's temperature increases or decreases, leading to an accelerated mode compensation control. This mode avoids overshoot of setpoint during system set-up and disturbance.

Deviation
Difference between the measurement value and the set-up point value of the setpoint.

Deviation alarm
Deviation value that follows the setpoint. If the set-up point is 350 °C and the deviation alarm value is +20 °C, the alarm value is 350 °C plus 20 °C, in other words 370 °C.

Droop
Difference in temperature between set-up point and the place at which the system's temperature stabilises. Can be corrected by manual or automatic adjustment.

F

Fuzzy logic
Artificial intelligence technique that enables control decisions to be made based on approximate or incomplete information.
Fuzzy logic is a decision-making function likely to prevent an initial overshoot or a deviation from the set-up point.

H

Hysteresis
Change in temperature necessary to change the output power from on to off on an ON-OFF controller.

I

Integral action (I)
Integral function of a control that automatically compensates the difference between the set-up point and the process's actual temperature.
A signal moves the proportional band upwards or downwards to correct the displacement error.

L

Linearity
Difference between an instrument's response and a straight line.

O

ON-OFF action
Controller whose required power is either 0 % or 100 %.

P

Process alarm
Fixed alarm value or independent secondary set-up point of the primary set-up point. If one of the process's values exceeds this value, an alarm condition is stored.

Proportional action (P)
Once the operating temperature has almost reached the set-up point and enters into the proportional band, the output power is requested and turned off according to a predefined cycle. The current change on the load reduces the heat power, thus avoiding temperature overshoot.

Proportional band
Temperature band expressed in degrees within which this function operates.

Proportional-integral-derivative action (PID)
Triple action temperature controller: proportional, integral (automatic reset) and derivative (speed).

R

Ramp
Programmed increase or decrease in temperature that evolves at constant speed.

Range
Zone between two limits in which a measurement or setpoint action takes place. Normally expressed in upper and lower limit values.

Rejection of common mode
An instrument's capacity to cancel the presence of parasitic voltage between the input terminals in relation to earth potential. Expressed in dB (decibels).

Rejection in series mode
An instrument's capacity to cancel the presence of parasitic voltage, usually 50 or 60 Hz, between its input terminals.

Resolution
Difference between two changes in temperature that introduces a change in control power. May be expressed in temperature or in percentage of control scale.

Retransmission output
Analogue power to the scale of the process or the set-up point value.

RS485 output signal
Serial communication port multipoint interface standard.
Connection of a digital control to a PC, mainframe computer or printer.

S

Scale
Difference between the upper and lower limits of a range expressed in the same unit.

Self-adjustment
Control used to calculate optimum PID parameters with integrated algorithm software in order to avoid manual adjustment.

Sensor failure safety
Safety function that ensures power is cut off if a thermocouple fails.

Setpoint
Setpoint to obtain or maintain a temperature.

Choose your controller

4 steps to decide which series best suits your requirements and guide you through over 200 available references.

- Digital or analogue?
- Control mode?
- Format?
- Type of application?

	Control mode	Formats	Application	Input	Display	Series
Digital	Self-adjusting P.I.D.	24 x 48 mm 48 x 48 mm	General	1 programmable temperature input	1 display	**15 Series STATOP**
		48 x 48 mm 48 x 96 mm 96 x 96 mm			2 displays	**30 Series STATOP**
	Self-adjusting, auto-adapting P.I.D.	24 x 48 mm 48 x 48 mm 48 x 96 mm 96 x 96 mm	Process	2 temperature and process inputs	2 displays	**60 Series STATOP**
Analogue	ON-OFF	48 x 48 mm 96 x 96 mm 96 x 96 mm	Simple	1 defined temperature input	None	**STATOP 4841** **STATOP 9601** **STATOP 4**
		96 x 96 mm 96 x 96 mm			1 display	**STATOP 9604** **STATOP NB**

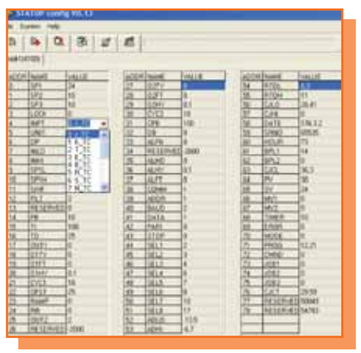

"STATOP Tools" configuration software

Specially designed for STATOP digital controllers, this software allows easy configuration of 15, 30 and 60 series controllers.

- Up to 10 connectable controllers for communication with PC
- Secured protocol (Modbus)
- Configuration of parameters and storage in file format
- Automatic recognition of controller type
- Free download of software from our Pyro-Contrôle website

A product support **technician** is **at your service** to answer all your questions, and propose the most suitable product for your requirements. Please don't hesitate to contact him.



15 Series STATOP digital controllers

Controllers equipped with automatic action adjustment system: self-adjusting PID control mode. They also include fuzzy logic, which carries out automatic process recovery. These highly efficient instruments combine technical sophistication and user-friendliness and can be used by people with no specific control skills.

- Control algorithm: PID + fuzzy logic
- Programmable temperature input: thermocouples and Pt 100 Ω resistance probes
- Power: 90…260 VAC
- Display: 1 x 10,000 counts
- Temperature ramp: 0…480 °C/min
- Timer: 0…9999 min
- Control output: reverse current relay, analogue 4…20 mA, 0…10 V or logic 0…5 V





15 Series STATOP	STATOP 24-15	STATOP 48-15
Format	1/32 DIN - 24 x 48 mm	1/16 DIN - 48 x 48 mm
Display	1	1
Useful depth	98 mm	86 mm
Front panel protection	IP 65	IP 30
Dimensions (L x H x W)	50 x 26.5 x 110.5 mm	48 x 46 x 94 mm
Weight	120 g	140 g
Panel cut-outs	45 x 22.2 mm	45 x 45 mm

To order

Control output	Alarm	RS485 Communication	STATOP 24-15	STATOP 48-15
Relays	–	–	LR02415-000	LR04815-000
		yes	LR02415-005	
Relays	Relays	–	LR02415-001	LR04815-001
		yes	LR02415-006	
Logic	Relays	–	LR02415-004	LR04815-004
		yes	LR02415-009	
4…20 mA	Relays	–	LR02415-002	LR04815-002
		yes	LR02415-007	
0…10 V	Relays	–	LR02415-003	LR04815-003
		yes	LR02415-008	

Additional features

Programmable temperature input

Type	Scale	Accuracy*	Input impedance
J	-120…+1000 °C	± 2 °C	2.2 MΩ
K	-200…+1370 °C	± 2 °C	2.2 MΩ
T	-250…+400 °C	± 2 °C	2.2 MΩ
E	-100…+900 °C	± 2 °C	2.2 MΩ
B	200…+1820 °C	± 2 °C	2.2 MΩ
R	0…+1767.8 °C	± 2 °C	2.2 MΩ
S	-250…+1300 °C	± 2 °C	2.2 MΩ
N	-250…+1300 °C	± 2 °C	2.2 MΩ
L	-200…+900 °C	± 2 °C	2.2 MΩ
Pt 100 Ω	-210…+700 °C	± 0,4 °C	2.2 kΩ

** Accuracy = linearity error + cold-joint compensation error + load compensation error + offset error*

Resolution: 18 bits
Sampling: 5 times/second
Sensor failure protection: configurable
Cold-joint compensation: internal

Control

- Output: hot or cold
- Proportional band: 0…20 °C
- Integral action time: 0…1000 s
- Derivative action time: 0…360 s
- Ramp speed: 0…55.55 °C/min
- Timer: 0.1…4553 min
- ON-OFF action: hysteresis adjustable from 0…11 s
- Modulation rate: 0…90 s

Control outputs

- 2 A / 240 VAC relays on resistive load
- 0-5 VDC logic voltage (R limitation = 66 Ω)
- Current analogue: 0…20 mA under 500 Ω maxi
- Voltage analogue: 0…10 VDC under 10 kΩ min

Alarm

- 2 A/240 VAC relays
- Configurable modes (absolute, deviation, etc.)
- Adjustable from 0 to 100 % of the scale
- Timer = alarm inhibition

Environmental features

- Operating temperature: -10 °C…+50 °C
- Storage temperature: -40 °C…+60 °C
- Humidity: 0…90 %RH (without condensation)
- Altitude: 2,000 m maximum
- Insulation: 20 MΩ at 500 VDC
- Dielectric strength: 2000 VAC, 50/60 Hz during 1min
- Vibrations: 10…55 Hz, 10 m/s² during 2 hours
- Shock resistance: 200 m/s² (20 *g*)

Electrical connections

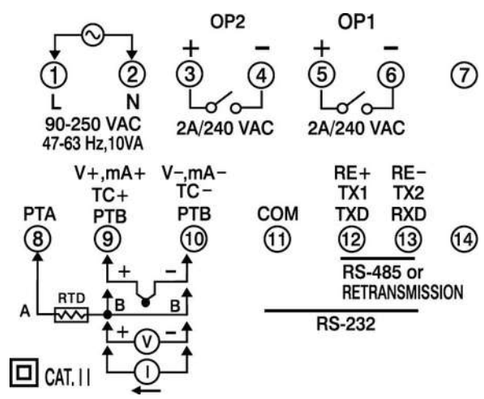

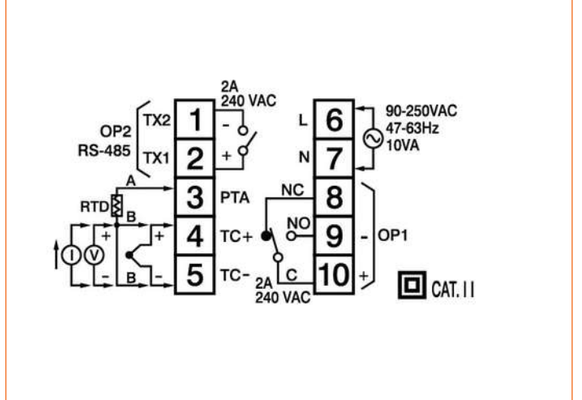

30 Series STATOP digital controllers

Controllers equipped with automatic action adjustment system: self-adjusting PID regulation mode. They also include fuzzy logic, which carries out automatic process recovery. **The 30 series STATOP regulators have 2 simultaneous displays: red for measurement and green for the setpoint.**
These highly efficient instruments combine technical sophistication and user-friendliness and can be used by people with no specific control skills.

- Control algorithm: PID + fuzzy logic
- A programmable input temperature: thermocouples and Pt 100 Ω resistance probes
- Supply: 90…260 VAC
- Display: 2 x 10,000 counts
- Temperature ramp: 0…480 °C/min
- Timer: 0…9999 min
- Control output: changeover relay, analogue 4…20 mA, 0…10 V or logic 0…5 V





30 Series STATOP	STATOP 48-30	STATOP 4896-30	STATOP 96-30
Format	1/16 DIN - 48 x 48 mm	1/8 DIN - 48 x 96 mm	1/4 DIN - 96 x 96 mm
Displays	2	2	2
Useful depth	105 mm	65 mm	53 mm
Front panel protection	IP 50		
Dimensions (L x H x W)	48 x 48 x 116 mm	48 x 96 x 80 mm	96 x 96 x 65 mm
Weight	150 g	210 g	250 g
Panel cut-outs	45 x 45 mm	45 x 92 mm	92 x 92 mm

To order

PRODUCTS IN STOCK

Output 1 (control)	Alarm	RS485 Communication	STATOP 48-30	STATOP 4896-30	STATOP 96-30
Relays	–	–	LR04830-000	LR08630-000	LR09630-000
		yes	LR04830-005	LR08630-005	LR09630-005
Relays	Relays	–	LR04830-001	LR08630-001	LR09630-001
		yes	LR04830-006	LR08630-006	LR09630-006
Logic	Relays	–	LR04830-004	LR08630-004	LR09630-004
		yes	LR04830-009	LR08630-009	LR09630-009
4…20 mA	Relays	–	LR04830-002	LR08630-002	LR09630-002
		yes	LR04830-007	LR08630-007	LR09630-007
0…10 V	Relays	–	LR04830-003	LR08630-003	LR09630-003
		yes	LR04830-008	LR08630-008	LR09630-008

NB: when choosing an Output 2 or Alarm 2, order a made-to-measure product

MADE-TO-MEASURE PRODUCTS

48-30 STATOP, 4896-30 STATOP & 96-30 STATOP

		X 1 X	X 1 X
Supply	90...264 VAC	4	
	11...26 VAC/DC	5	
Output 1	2 A/240 VAC relay output	1	
	5 V/30 mA logic	2	
	4/10 mA 0/20 mA current analogue	3	
	0/10 V voltage analogue	5	
Output 2 or Alarm 2	2 A/240 VAC relays	1	
	5 V/30 mA logic	2	
	4/20 mA 0/20 mA current analogue	3	
	0/10 V voltage analogue	5	
	20 V/25 mA transmitter supply	7	
Alarm 1	2 A/240 V relays		
Transmission	None		0
	RS485		1
	4/20 mA 0/20 mA current retransmission		3
	0/10 V voltage retransmission		5

Additional features

Programmable temperature input

Type	Scale	Accuracy*	Input impedance
J	-120…+1000 °C	± 2 °C	2.2 MΩ
K	-200…+1370 °C	± 2 °C	2.2 MΩ
T	-250…+400 °C	± 2 °C	2.2 MΩ
E	-100…+900 °C	± 2 °C	2.2 MΩ
B	+200…+1820 °C	± 2 °C	2.2 MΩ
R	0…+1767.8 °C	± 2 °C	2.2 MΩ
S	-250…+1300 °C	± 2 °C	2.2 MΩ
N	-250…+1300 °C	± 2 °C	2.2 MΩ
L	-200…+900 °C	± 2 °C	2.2 MΩ
Pt 100 Ω	-210…+700 °C	± 0.4 °C	1.3 kΩ

** Accuracy = linearity error + cold-joint compensation error + load compensation error + offset error*

Resolution: 18 bits
Sampling: 5 times/second
Sensor failure protection: configurable
Cold-joint compensation: internal

Control

- Output n°1: hot or cold
- Output n°2 (made-to-measure products only): cold control PID Pb = 50…300 % with dead zone Pb = ± 30 %
- Hot (MV1) and cold (MV2) manual control
- Proportional band: 0…20 °C
- Integral action time: 0…1000 s
- Derivative action time: 0…360 s
- Ramp speed: 0…55.55 °C/min
- Timer: 0.1…4553 min
- ON-OFF action: hysteresis adjustable from 0…11 s
- Modulation rate: 0…90 s
- Safety: if sensor failure occurs, automatic manual start-up

Control outputs

- 2 A/240 VAC relays on resistive load
- 0-5 VDC logic voltage (R limitation = 66 Ω)
- Current analogue: 4…20 mA under 500 Ω maxi
- Voltage analogue: 0…10 VDC under 10 kΩ min

Alarm

- 2 A/240 VAC relays
- Configurable modes (absolute, deviation, etc.)
- Adjustment from 0 to 100 % of the scale
- Timer: alarm inhibition

Environmental features

- Operating temperature: -10 °C…+50 °C
- Storage temperature: -40 °C…+60 °C
- Humidity: 0…90 %RH (without condensation)
- Insulation: 20 MΩ under 500 VDC
- Dielectric strength: 2000 VAC, 50/60 Hz during 1min
- Vibrations: 10…55 Hz, 10 m/s² during 2 hours
- Shock resistance: 200 m/s² (20 *g*)

Electrical connections

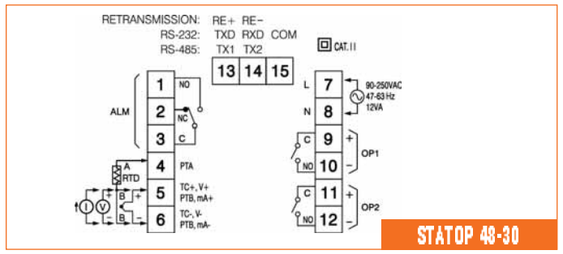

STATOP 48-30

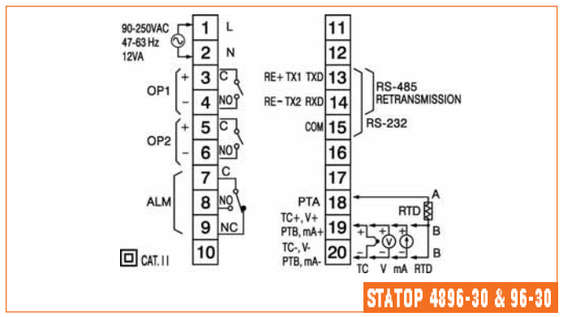

STATOP 4896-30 & 96-30

EXAMPLE

STATOP 48-30 controller

- supply: 230 VAC
- output 1: logic 5 V
- output 2: 4/10 mA current analogue
- without transmission

=> order STATOP 48-30 . 411310

60 Series STATOP digital controllers

Controllers equipped with automatic action adjustment system: self-adjusting PID regulation mode. They also include fuzzy logic, which carries out automatic process recovery. **The 60 series STATOP controllers are equipped with a second input for piloting control the setpoint.**
These highly efficient instruments combine technical sophistication and user-friendliness and can be used by people with no specific control skills.

- Programmable universal input: multisensor and 0 to 4…20 mA, 0…10 V
- A programmable process input
- A logic input
- Control algorithm: PID + fuzzy logic
- Supply: 90…260 VAC
- Displays: 2 x 10,000 points
- Temperature ramp: 0…480 °C/min
- Timer: 0…9999 min
- Control output: changeover relay, analogue 4…20 mA, 0…10 V or logic 0…5 V
- Analogue retransmission: 4…20 mA
- Communication via RS485 connection, ModBus RTU protocol



60 Series STATOP	STATOP 24-60	STATOP 48-60	STATOP 4896-60	STATOP 96-60
Format	1/32 DIN - 24 x 48 mm	1/16 DIN - 48 x 48 mm	1/8 DIN - 48 x 96 mm	1/4 DIN - 96 x 96 mm
Displays	2	2	2	2
Useful depth	98 mm	75 mm	65 mm	53 mm
Front panel protection	IP 65		IP 50	
Dimensions (L x H x W)	50 x 26.5 x 110.5 mm	50.7 x 50.7 x 88.5 mm	48 x 96 x 80 mm	96 x 96 x 65 mm
Weight	120 g	150 g	210 g	250 g
Panel cut-outs	45 x 22.2 mm	45 x 45 mm	45 x 92 mm	92 x 92 mm
Alarm 1 output	Logic	Relays		
Alarm 2 output	Relays (1)		Relays	
Cold control output	Relays (1)		Relays	

(1) One relay only for Alarm 2 or Cold control.

Universal input n°1 Configurable type and scale

Type	Scale	Accuracy*	Input impedance
J	-120…+1000 °C	± 2 °C	4.3 MΩ
K	-200…+1370 °C	± 2 °C	4.3 MΩ
T	-250…+400 °C	± 2 °C	4.3 MΩ
E	-100…+900 °C	± 2 °C	4.3 MΩ
B	200…+1820 °C	± 2 °C	4.3 MΩ
R	0…+1767,8 °C	± 2 °C	4.3 MΩ
S	-250…+1300 °C	± 2 °C	4.3 MΩ
N	-250…+1300 °C	± 2 °C	4.3 MΩ
L	-200…+900 °C	± 2 °C	4.3 MΩ
Pt 100 Ω	-210…+700 °C	± 0.1 °C	1.3 kΩ
mV	-8…+70 mV	± 0.01 mV	4.3 MΩ
mA	-3…+27 mA	± 0.005 mA	70.5 MΩ
V	-1.3…+11.5 V	± 0.0015 V	302 kΩ

** Accuracy = linearity error + cold-joint compensation error + load compensation error + offset error*

Cold-joint compensation	: 0.1 °C
Sensor failure protection response	: 8 s for TC, Pt 100 Ω and mV : 0.2 s for mA and V
Max. line resistance	: 100 Ω
Series mode rejection	: 60 dB
Common mode rejection	: 120 dB
Sampling	: 10 times per second

Control

- Proportional band: 0…200 °C
- Integral action time: 0…3600 s
- Derivative action time: 0…1000 s
- Ramp speed: 0…55.55 °C/min
- Timer: 0…9999 minutes count up or down
- ON-OFF action: hysteresis adjustable from 0…11 °C
- Modulation rate: 0…99 s
- Control direction:
  – Forward (cold) or reverse (hot) for channel 1
  – Forward (cold) for channel 2 (or alarm 2)

Logic input

- Logic level Status 0: -10 V…+0.8 V
- Logic level Status 1: 2 V…10 V
- Setpoint or PID commutation, or alarm acknowledgement or forcing of a control output.

Additional features

Control output

- Relay contact: 2 A/240 VAC on resistive load
- Logic output: 5 V/30 mA (R limitation 66 Ω)
- Current analogue: 0 to 4…20 mA at 500 Ω max
- Voltage analogue: 0…10 V at 10 kΩ mini

Environmental features

- Operating temperature: -10 °C…+50 °C
- Storage temperature: -40 °C…+60 °C
- Humidity: 0…90 %RH (without condensation)
- Insulation: 20 MΩ at 500 VDC
- Dielectric strength: 2000 VAC, 50/60 Hz during 1min
- Vibrations: 10…55 Hz, 10 m/s² (20 *g*) during 2 hours
- Shock resistance: 200 m/s² (20 *g*)
- Electrical safety: EN 61010-1 (IEC1010-1)
- EMC: EN 61326 & EN 61010-1
- Case: self-extinguishing polycarbonate

Process input n° 2 Configurable type and scale

Type	Scale	Accuracy	Input impedance
mA	-3…+27 mA	± 0.005 mA	4.3 mΩ
V	-1.3…+11.5 V	± 0.0015 V	302 kΩ

Electrical connections

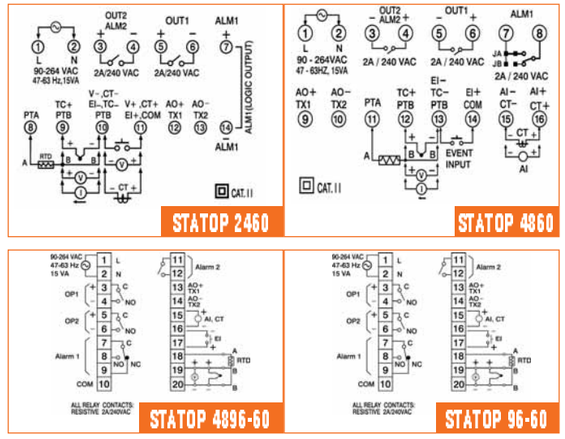

To order

PRODUCTS IN STOCK

Main control output	Analogue retransmission 4…20 mA	RS485 Communication	STATOP 24-60	STATOP 48-60	STATOP 4896-60	STATOP 96-60
Relays	–	–	LR02460-001	LR04860-001	LR08660-001	LR09660-001
	–	yes	LR02460-006	LR04860-006	LR08660-006	LR09660-006
	yes	–	LR02460-011	LR04860-011	LR08660-011	LR09660-011
Logic	–	–	LR02460-004	LR04860-004	LR08660-004	LR09660-004
	–	yes	LR02460-009	LR04860-009	LR08660-009	LR09660-009
	yes	–	LR02460-014	LR04860-014	LR08660-014	LR09660-014
4…20 mA	–	–	LR02460-002	LR04860-002	LR08660-002	LR09660-002
	–	yes	LR02460-007	LR04860-007	LR08660-007	LR09660-007
	yes	–	LR02460-012	LR04860-012	LR08660-012	LR09660-012
0…10 V	–	–	LR02460-003	LR04860-003	LR08660-003	LR09660-003
	–	yes	LR02460-008	LR04860-008	LR08660-008	LR09660-008
	yes	–	LR02460-013	LR04860-013	LR08660-013	LR09660-013

Standard number of relays for Alarm 1 Output, Alarm 2 and Cold control	1 Relay	2 Relays	3 Relays	3 Relays

MADE-TO-MEASURE PRODUCTS

STATOP 24-60 & STATOP 48-60

		X 1 X X 1 X
Supply	90…264 VAC	4
	11…26 VAC/VDC	5
Output 1	Relays 2 A/240 VAC	1
	Logic 5 V/30 mA	2
	Current analogue 4/10 mA 0/20 mA	3
	Voltage analogue 0/10 V	5
Output 2 or Alarm 2	None	0
	2 A/ 240 V Relays	1
	5 V/30 mA logic	2
	Current analogue 4/20 mA 0/20 mA	3
	Voltage analogue 0/10 V	5
	Transmitter power 20 V/25 mA	7
Alarm 1	Relays 2 A/240 V (ST48.60) or Logic (ST24.60)	
Transmission	None	0
	RS485	1
	Current retransmission 4/20 mA 0/20 mA	3
	Voltage retransmission 0/10 V	5

STATOP 4896-60 & STATOP 96-60

		X 1 X X X X X
Supply	90…264 VAC	4
	11…26 VAC/VDC	5
Output 1	Relays 2 A/240 VAC	1
	Logic 5 V/30 mA	2
	Current analogue 4/20 mA 0/20 mA	3
	Voltage analogue 0/10 V	5
Output 2	None	0
	Relays 2 A/240 V	1
	Logic 5V/30 mA	2
	Current analogue 4/20 mA 0/20 mA	3
	Voltage analogue 0/10 V	5
	Transmitter power 20V/25 mA	7
Alarm 1	None	0
	Relays 2 A /240 V	1
Alarm 2	None	0
	Relays 2 A /240 V	1
Transmission	None	0
	RS485	1
	Current retransmission 4/20 mA 0/20 mA	3
	Voltage retransmission 0/10 V	5

STATOP Analogue controllers

Analogue controllers with ON-OFF or Proportional (P) action.
Available in versions with or whithout measurement display.

- Temperature input: J, K thermocouple or Pt 100 Ω resistance
- Control direction: forward (cold) or reverse (hot)
- Control algorithm: ON-OFF or P
- Control output: reverse relay








STATOP Series	STATOP 4841	STATOP 9601	STATOP 9604	STATOP 4/MDS	STATOP 4/MDA	STATOP NB
Format	1/16 DIN - 48 x 48 mm	1/4 DIN - 96 x 96 mm				
Displays	none	none	2,000-count digital Temperature measured in °C	none	none	1,000-count digital Temperature measured in °C
Useful depth	86 mm	53 mm		113 mm		
Front panel protection	IP 50			IP 40		
Weight	250 g	330 g	280 g	800 g		
Panel cut-out	45 x 45 mm	92 x 92 mm				
Accuracy	2.2 % of scale			1 % of scale		
Hysteresis in on-off	1 % of scale			0.4 to 2 % of scale		
Modulation pace	20 s			8, 12 or 16 s		
Outputs	reverse relay 5 A/240 VAC			changeover relay 3 A/240 VAC		
Control indicator	two-tone "OUT" - red: active output green: inactive output	two-tone "°C" - red: active output green: inactive output	red "OUT": active output	—	—	—
Operating temperature	-10 °C.. +50 °C					
Storage temperature	-40 °C.. +60 °C					
Humidity	0…90 %RH (without condensation)					
Insulation	20 MΩ under 500 VDC					
Dielectric strength	2000 VAC, 50/60 Hz during 1 min					
Vibrations	10…55 Hz, 10 m/s² during 2 hours					
Shock resistance	200 m/s² (20 *g*)					

To order

Predefined scale	Alimentation	STATOP 4841	STATOP 9601	STATOP 9604	Alarm output	STATOP 4 / MDS	STATOP 4 / MDA Alarm output	STATOP NB	Alarm output
Type J 0-300 °C	115 / 230 VAC					P01614001	P01614401	P01620201	P01620301
	24…230 VAC					P01614011	P01614511	P01620211	P01620311
Type J 0-400 °C	115 / 230 VAC		LR09601-100			P01614002	P01614402		
	24…230 VAC					P01614012	P01614512		
	200…260 VAC	LR04841-100							
	90…260 VAC			LR09604-100	LR09604-101				
Type K 0-600 °C	115 / 230 VAC		LR09601-101			P01614022	P01614422		
	24…230 VAC					P01614032	P01614532		
	90…260 VAC			LR09604-102	LR09604-103				
Type K 0-800 °C	115 / 230 VAC					P01614023	P01614423		
	24…230 VAC					P01614033	P01614533		
	200…260 VAC	LR04841-101							
Type K 0-1200 °C	115 / 230 VAC		LR09601-103			P01614025	P01614425		
	24…230 VAC					P01614035	P01614535		
	200…260 VAC	LR04841-102							
	90…260 VAC			LR09604-106	LR09604-107				
Pt 100 Ω 0-100 °C	115 / 230 VAC		LR09601-104						
	90…260 VAC			LR09604-108	LR09604-109				
Pt 100 Ω 0-120 °C	115 / 230 VAC					P01614101	P01614501		
Pt 100 Ω 0-200 °C	200…260 VAC	LR04841-103							
Pt 100 Ω 0-250 °C	115 / 230 VAC					P01614103	P01614503		
Pt 100 Ω 0-300 °C	115 / 230 VAC		LR09601-105						
	90…260 VAC			LR09604-110	LR09604-111				

Electrical connections

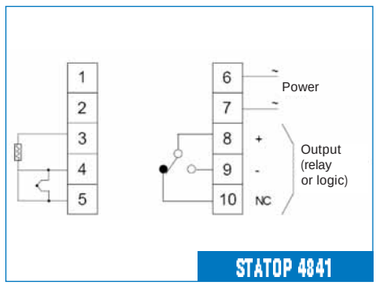

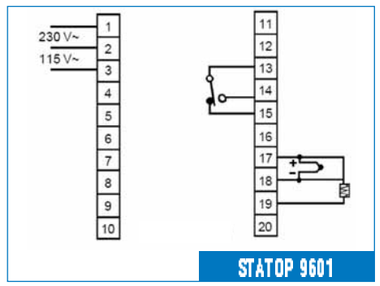

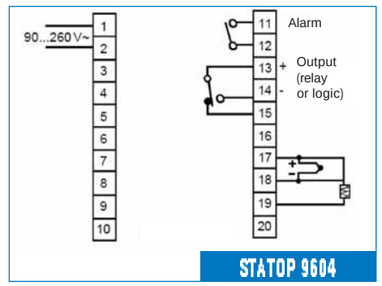

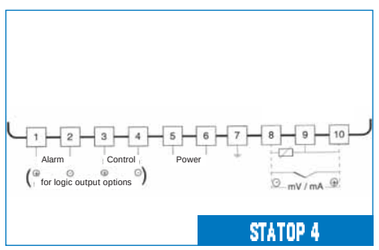

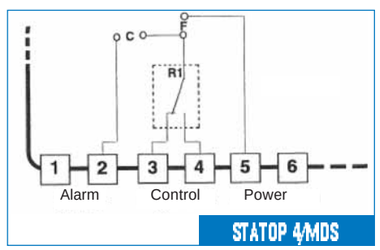

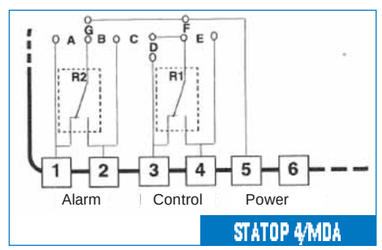

CHAUVIN ARNOUX - Test & Measurement

Hand held, electric and electronic test and measurement instruments for field and laboratory

Tel.: +33 1 44 85 44 85 - Fax: +33 1 46 27 73 89

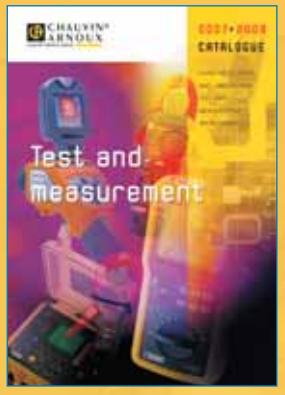

ENERDIS

Systems and equipment for the measurement, control, metering and monitoring of electrical networks

Tel.: +33 1 47 46 78 00 - Fax: +33 1 42 53 64 78

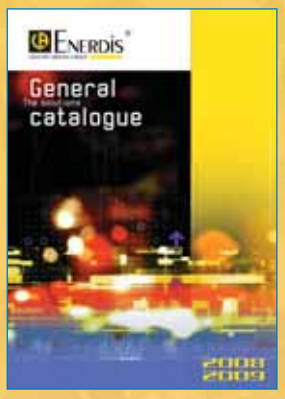

MANUMESURE

Calibration, repair, maintenance, qualification and other services for industry

Tel.: +33 2 31 64 51 43 - Fax: +33 2 31 64 51 09



Pyro-Contrôle

Pyro-Contrôle provides industrial solutions for all the temperature measurement, testing and calibration requirements of the leading process industries in the nuclear, chemicals, metallurgy, glass, plastics, semi-conductors and agri-food sectors.

• Tel: +33 (0)4 72 14 15 55 • Fax: +33 (0)4 72 14 15 41
• e-mail: export@pyro-controle.tm.fr • web: www.pyro-controle.com

Chauvin Arnoux Subsidiaries

Austria
Tel.: +43 1 61 61 9 61
Fax: +43 1 61 61 9 61 61
E-mail: vie-office@chauvin-arnoux.at

China
Tel.: +86 21 65 21 51 96
Fax: +86 21 65 21 61 07
E-mail: info@chauvin-arnoux.com.cn

Germany
Tel.: +49 07 851 99 260
Fax: +49 07 851 99 26 60
E-mail: info@chauvin-arnoux.de

Italy
Tel.: +39 039 245 75 45
Fax: +39 039 481 561
E-mail: info@amra-chauvin-arnoux.it

Middle East
Tel.: +961 1 890 425
Fax: +961 1 890 424
E-mail: camie@chauvin-arnoux.com

Scandinavia
Tel.: +46 8 50 52 68 00
Fax: +46 8 50 52 68 10
E-mail: info@camatsystem.com

Spain
Tel.: +34 93 459 08 11
Fax: +34 93 459 14 43
E-mail: comercial@chauvin-arnoux.es

Switzerland
Tel.: +41 44 727 75 55
Fax: +41 44 727 75 56
E-mail: info@chauvin-arnoux.ch

United Kingdom
Tel.: +44 1 628 788 888
Fax: +44 1 628 628 099
E-mail: info@chauvin-arnoux.co.uk

U.S.A.
Tel.: +1 508 698 2115
Fax: +1 508 698 2118
E-mail: sales@aemc.com

Your local distributor

906 111 641 - Ed 06 - 01/2008 - Characteristics subject to modifications according to technological developments.

FRANCE
Pyro-Contrôle
6 bis, av. du Docteur Schweitzer
69881 MEYZIEU Cedex
Tel: +33 4 72 14 15 55
Fax: +33 4 72 14 15 41
export@pyro-controle.tm.fr
www.pyro-controle.com

UNITED KINGDOM
Chauvin Arnoux Ltd
Waldeck House - Waldeck Road
MAIDENHEAD SL6 8BR
Tel: +44 1628 788 888
Fax: +44 1628 628 099
info@chauvin-arnoux.co.uk
www.chauvin-arnoux.co.uk

MIDDLE EAST
Chauvin Arnoux Middle East
P.O. BOX 60-154
1241 2020 JAL EL DIB (Beirut) - LEBANON
Tel: +961 1 890 425
Fax: +961 1 890 424
camie@chauvin-arnoux.com
www.chauvin-arnoux.com

CHAUVIN ARNOUX GROUP