Data sheet

# Electronic timer CT-AHD.12
# OFF-delayed with 1 c/o (SPDT) contact

The CT-AHD.12 is an electronic time relay with OFF-delay. It is from the CT-D range.

With their MDRC profile and a width of only 17.5 mm, the CT-D range timers are ideally suited for installation in distribution panels as well as for industrial applications where compact dimensions are required.




2CDC 251 094 F0006

## Characteristics

- Rated control supply voltage 24-48 V DC, 24-240 V AC
- Single-function timer OFF-delay
- 7 time ranges (0.05 s - 100 h) in one device
- Control input: voltage-related triggering, polarized, capable of switching a parallel load
- Light-grey enclosure in RAL 7035
- 1 c/o (SPDT) contact (250 V / 6 A)
- Width of only 17.5 mm (0.689 in)
- 2 LEDs for the indication of operational states

## Approvals

UL 508, CAN/CSA C22.2 No.14

EAC

CCC

RMRS

## Marks

CE

RCM

## Order data

| Type | Rated control supply voltage | Time range | Output | Order code |
|---|---|---|---|---|
| CT-AHD.12 | 24-48 V DC, 24-240 V AC | 0.05 s - 100 h | 1 c/o (SPDT) contact | 1SVR 500 110 R0000 |

## Functions

### Operating controls

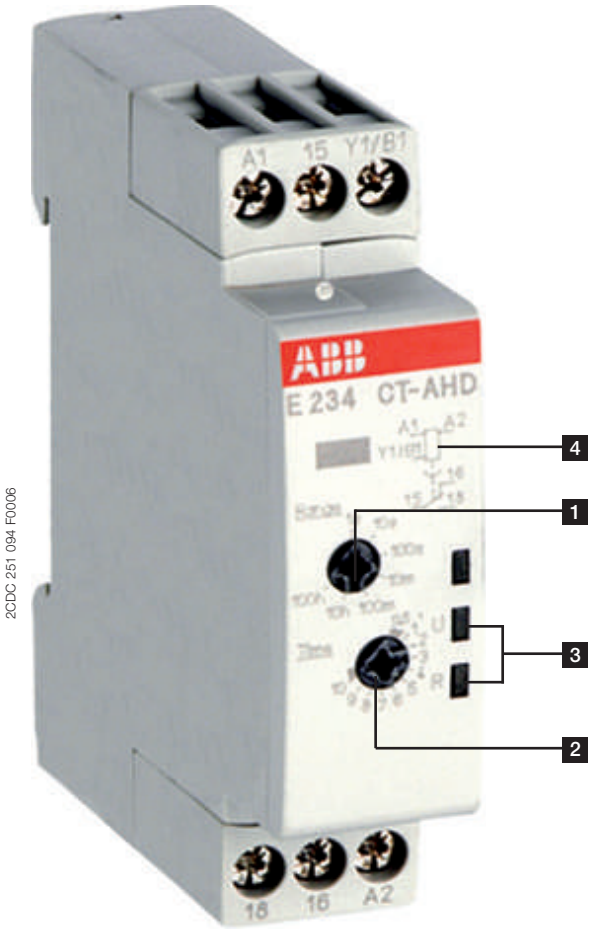


2CDC 251 094 F0006

**1** **Rotary switch for the preselection of the time range**

**2** **Potentiometer with direct reading scale for the fine adjustment of the time delay**

**3** **Indication of operational states**

U: green LED

control supply voltage applied

timing

R: yellow LED

output relay energized

**4** **Circuit diagram**

### Application

With their structural form and their width of only 17.5 mm, the CT-D range timers are ideally suited for installation in distribution panels.

### Operating mode

The CT-AHD.12 with 1 c/o (SPDT) contact and offers 7 time ranges, from 0.05 s to 100 h. The time delay range is rotary switch selectable on the front of the unit. The fine adjustment of the time delay is made via an internal potentiometer, with a direct reading scale, on the front of the unit.

## Function descriptions / diagrams

### OFF-delay with auxiliary voltage

This function requires continuous control supply voltage for timing.

If control input A1-Y1/B1 is closed, the output relay energizes immediately. If control input A1-Y1/B1 is opened, the time delay starts. The green LED flashes during timing. When the selected time delay is complete, the output relay de-energizes and the flashing green LED turns steady.

If control input A1-Y1/B1 recloses before the time delay is complete, the time delay is reset and the output relay does not change state. Timing starts again when control input A1-Y1/B1 re-opens. If control supply voltage is interrupted, the output relay de-energizes and the time delay is reset.

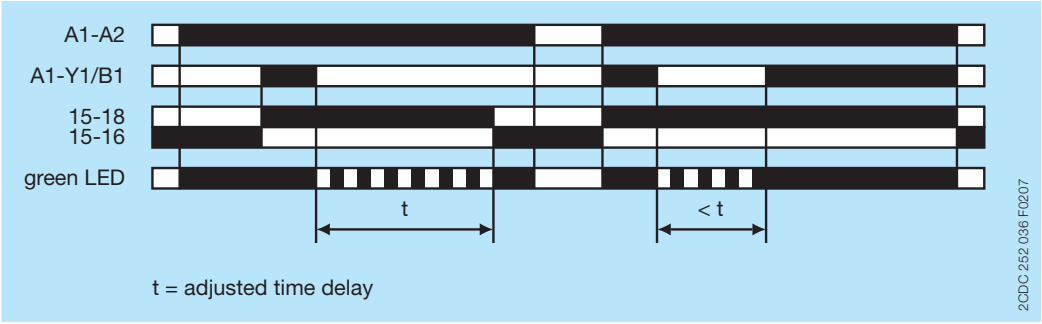


## Electrical connection

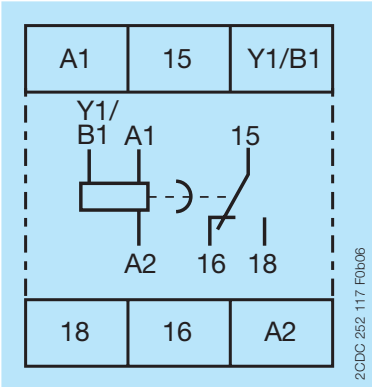


Connection diagram

| | |
|---|---|
| A1-A2 | Rated control supply voltage $U_s$ 24-48 V DC or 24-240 V AC |
| A1-Y1/B1 | Control input |
| 15-16/18 | 1 c/o (SPDT) contact |

## Wiring instructions

Parallel load to control input possible / allowed

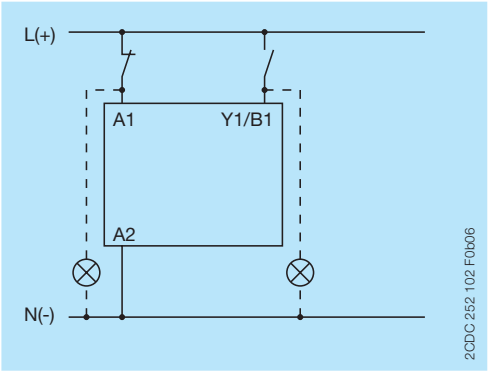

## Technical data

Data at $T_a$ = 25 °C and rated values, unless otherwise indicated

### Input circuits

| Supply circuit | | A1-A2 |
|---|---|---|
| Rated control supply voltage $U_s$ | | 24-240 V AC, 24-48 V DC |
| Rated control supply voltage $U_s$ tolerance | | -15...+10 % |
| Typical current / power consumption | 24 V DC | 14 mA / 0.3 W |
| | 115 V AC | 52 mA / 1.3 VA |
| | 230 V AC | 60 mA / 2.4 VA |
| Rated frequency | | DC; 50/60 Hz |
| Frequency range AC | | 47-63 Hz |
| Power failure buffering time | | min. 20 ms |
| Release voltage | | > 10 % of the min. rated control supply voltage $U_s$ |

| Control circuit | | |
|---|---|---|
| Control input, control function | A1-Y1/B1 | start timing external |
| Kind of triggering | | voltage-related triggering |
| Resistance to reverse polarity | | yes |
| Polarized | | yes |
| Capable of switching a parallel load | | yes |
| Maximum cable length to the control inputs | | 50 m - 100 pF/m |
| Minimum control pulse length | | 20 ms |
| Control voltage potential | | see rated control supply voltage $U_s$ |
| Current /power consumption of the control input | 24 V DC | 3.8 mA / 0.1 W |
| | 115 V AC | 23.9 mA / 0.4 VA |
| | 230 V AC | 26.9 mA / 0.7 VA |

| Timing circuit | | |
|---|---|---|
| Kind of timer | Single-function timer | OFF-delay with auxiliary voltage |
| Time ranges 0.05 s - 100 h | | 0.05-1 s, 0.5-10 s, 5-100 s, 0.5-10 min, 5-100 min, 0.5-10 h, 5-100 h |
| Recovery time | | < 50 ms |
| Repeat accuracy (constant parameters) | | $\Delta t < \pm$ 0.5 % |
| Accuracy within the rated control supply voltage tolerance | | $\Delta t <$ 0.005 % / V |
| Accuracy within the temperature range | | $\Delta t <$ 0.06 % / °C |
| Setting accuracy of time delay | | ± 10 % of full-scale value |

### User interface

| Indication of operational states | | |
|---|---|---|
| Control supply voltage / timing | U: green LED | ⎍⎺⎺⎍: control supply voltage applied<br>⎍⎍⎍⎺: timing |
| Relay status | R: yellow LED | ⎍⎺⎺⎍: output relay energized |

## Output circuit

| | | |
|---|---|---|
| Kind of output | 15-16/18 | relay, 1 c/o (SPDT) contact |
| Contact material | | Cd-free |
| Rated operational voltage $U_e$ | | 250 V |
| Minimum switching voltage / Minimum switching current | | 12 V / 100 mA |
| Maximum switching voltage / Minimum switching current | | see load limit curve / see load limit curve |
| Rated operational current $I_e$ | AC-12 (resistive) at 230 V | 6 A |
| | AC-15 (inductive) at 230 V | 3 A |
| | DC-12 (resistive) at 24 V | 6 A |
| | DC-13 (inductive) at 24 V | 2 A |
| AC rating (UL 508) | utilization category (Control Circuit Rating Code) | B 300 |
| | max. rated operational voltage | 300 V AC |
| | maximum continuous thermal current at B 300 | 5 A |
| | max. making/breaking apparent power at B 300 | 3600 VA / 360 VA |
| Mechanical lifetime | | 30 x $10^6$ switching cycles |
| Electrical lifetime | AC-12, 230 V, 4 A | 0.1 x $10^6$ switching cycles |
| Maximum fuse rating to achieve short-circuit protection | n/c contact | 6 A fast-acting |
| | n/o contact | 10 A fast-acting |

## General data

| | | |
|---|---|---|
| MTBF | | on request |
| Duty time | | 100 % |
| Dimensions (W x H x D) | product dimensions | 17.5 x 70 x 58 mm (0.69 x 2.76 x 2.28 in) |
| | packaging dimensions | 89 x 65 x 20 mm (3.50 x 2.56 x 0.79 in) |
| Weight | net weight | 0.053 kg (0.117 lb) |
| | gross weight | 0.065 kg (0.143 lb) |
| Mounting | | DIN rail (IEC/EN 60715), snap-on mounting without any tool |
| Mounting position | | any |
| Minimum distance to other units, normal operation mode | horizontal | not necessary |
| | vertical | not necessary |
| Degree of protection | housing | IP50 |
| | terminals | IP20 |

## Electrical connection

| | | |
|---|---|---|
| Connecting capacity | fine-strand with wire end ferrule | 2 x 0.5-1.5 $mm^2$ / 1 x 0.5-2.5 $mm^2$ (2 x 20-16 AWG / 1 x 20-14 AWG) |
| | fine-strand without wire end ferrule | 2 x 0.5-1.5 $mm^2$ / 1 x 0.5-2.5 $mm^2$ (2 x 20-16 AWG / 1 x 20-14 AWG) |
| | rigid | 2 x 0.5-1.5 $mm^2$ / 1 x 0.5-4 $mm^2$ (2 x 20-16 AWG / 1 x 20-12 AWG) |
| Stripping length | | 7 mm (0.28 in) |
| Tightening torque | | 0.5-0.8 Nm (4.43-7.08 lb.in) |

## Environmental data

| | | |
|---|---|---|
| Ambient temperature ranges | operation | -20...+60 °C (-4...+140 °F) |
| | storage | -40...+85 °C (-40...+185 °F) |
| Climatic class (IEC/EN 60068-2-30) | | 3k3 |
| Relative humidity range | | 25 % to 85 % |
| Vibration, sinusoidal (IEC/EN 60068-2-6) | | 20 $m/s^2$, 10 cycles, 10...150...10 Hz |
| Shock, half-sine (IEC/EN 60068-2-27) | | 150 $m/s^2$, 11 ms |

## Isolation data

| | | |
|---|---|---|
| Rated insulation voltage $U_i$ | input circuit / output circuit | 300 V |
| | output circuit 1 / output circuit 2 | n/a |
| Rated impulse withstand voltage $U_{imp}$ | between all isolated circuits | 4 kV; 1.2/50 µs |
| Power-frequency withstand voltage (test voltage) | between all isolated circuits | 2.5 kV, 50 Hz, 60 s |
| Basic insulation (IEC/EN 61140) | input circuit / output circuit | 300 V |
| Protective separation (IEC/EN 61140, EN 50178) | input circuit / output circuit | 250 V |
| Pollution degree | | 3 |
| Overvoltage category | | III |

## Standards / Directives

| | |
|---|---|
| Standards | IEC/EN 61812-1 |
| Low Voltage Directive | 2014/35/EU |
| EMC directive | 2014/30/EU |
| RoHS Directive | 2011/65/EC |

## Electromagnetic compatibility

| | | |
|---|---|---|
| Interference immunity to | | IEC/EN 61000-6-2 |
| electrostatic discharge | IEC/EN 61000-4-2 | Level 3 (6 kV / 8 kV) |
| radiated, radio-frequency, electromagnetic field | IEC/EN 61000-4-3 | Level 3 (10 V/m) |
| electrical fast transient / burst | IEC/EN 61000-4-4 | Level 3 (2 kV / 5 kHz) |
| surge | IEC/EN 61000-4-5 | Level 3 (2 kV L-L) |
| conducted disturbances, induced by radio-frequency fields | IEC/EN 61000-4-6 | Level 3 (10 V) |
| Interference emission | | IEC/EN 61000-6-3 |
| high-frequency radiated | IEC/CISPR 22, EN 55022 | Class B |
| high-frequency conducted | IEC/CISPR 22, EN 55022 | Class B |

## Technical diagrams

### Load limit curves

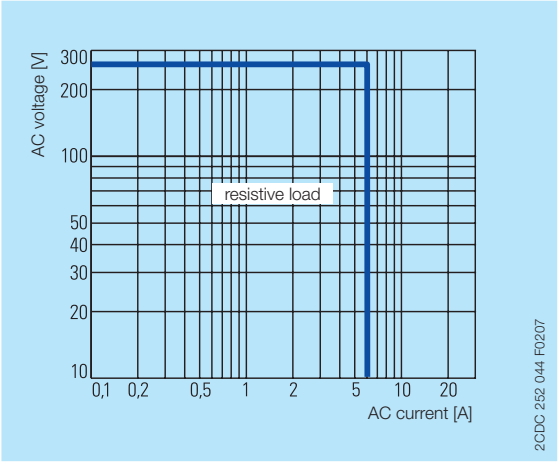


**AC load (resistive)**

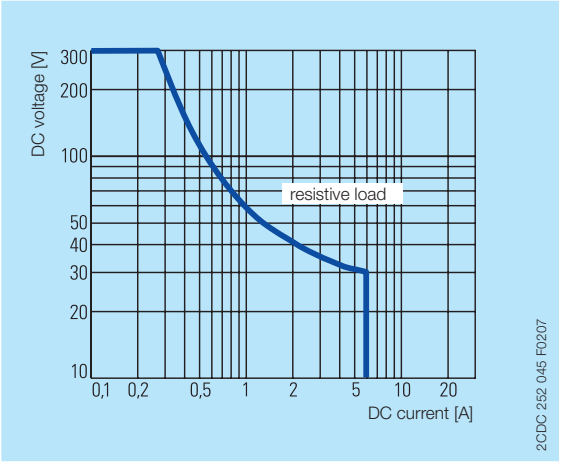


**DC load (resistive)**

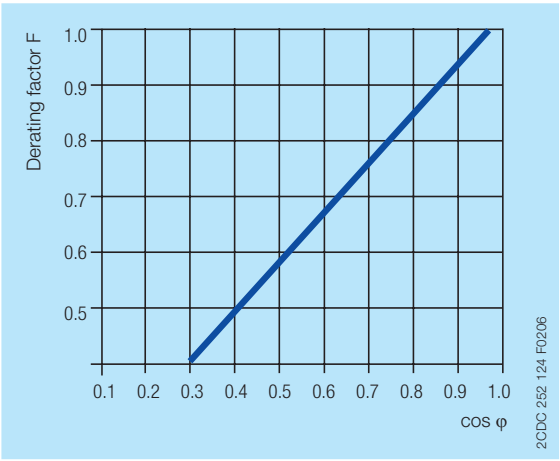


**Derating factor F for inductive AC load**

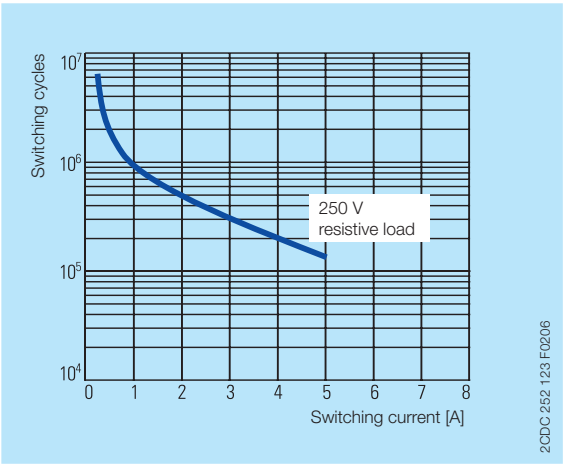


**Contact lifetime**

## Dimensions

in **mm** and *inches*

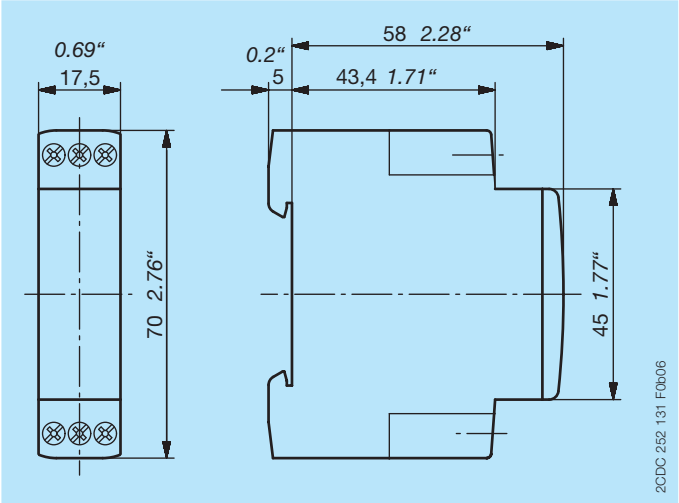


## Further documentation

| Document title | Document type | Document number |
|---|---|---|
| Electronic products and relays | Technical catalogue | 2CDC 110 004 C02xx |
| CT-D range | Instruction manual | 1SVC 500 010 M1000 |

You can find the documentation on the internet at www.abb.com/lowvoltage
-> Automation, control and protection -> Electronic relays and controls -> Electronic timers.

## CAD system files

You can find the CAD files for CAD systems at http://abb-control-products.partcommunity.com
-> Low Voltage Products & Systems -> Control Products -> Electronic Relays and Controls.

# Contact us

**ABB STOTZ-KONTAKT GmbH**
P. O. Box 10 16 80
69006 Heidelberg, Germany
Phone: +49 (0) 6221 7 01-0
Fax: +49 (0) 6221 7 01-13 25
E-mail: info.desto@de.abb.com

You can find the address of your
local sales organisation on the
ABB home page
http://www.abb.com/contacts
-> Low Voltage Products and Systems

**Document number 2CDC 111 161 D0201** (08.2016)

**Note:**
We reserve the right to make technical changes or modify the contents of this document without prior notice. With regard to purchase orders, the agreed particulars shall prevail. ABB AG does not accept any responsibility whatsoever for potential errors or possible lack of information in this document.

We reserve all rights in this document and in the subject matter and illustrations contained therein. Any reproduction, disclosure to third parties or utilization of its contents – in whole or in parts – is forbidden without prior written consent of ABB AG.

Copyright© 2016 ABB
All rights reserved