Brand of NTN corporation

# Technical data

## ESFE211

Bearing units



Grey cast housing, radial insert ball bearing with eccentric locking collar, single lip seal

## KIT CONTENT

**ES211G2, FE211**

## VISUAL (S)

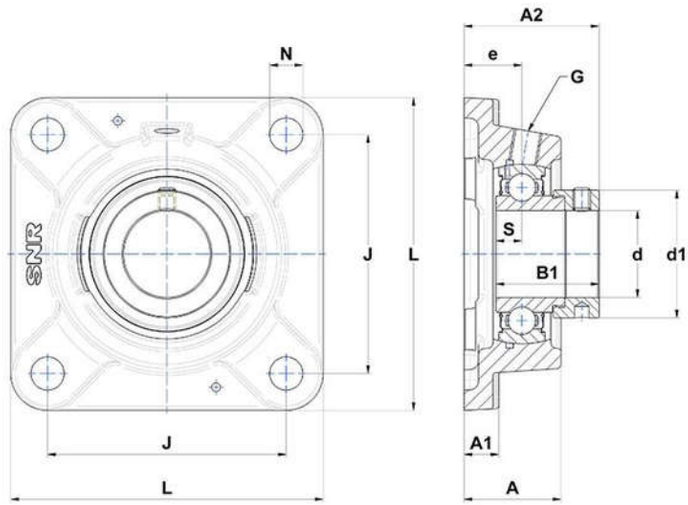


## PRODUCT DEFINITION

| | |
|---|---|
| **Brand** | SNR |
| **A - Housing height** | 48,5 mm |
| **A1 - Housing foot height / flange height** | 15 mm |
| **A2 - Total height from mounting surface** | 67,4 mm |
| **B - Width of Inner Ring** | 32,5 mm |
| **B1 - Overall width Inner Ring** | 48,4 mm |

| PRODUCT DEFINITION | |
|---|---|
| **d - Shaft diameter** | 55 mm |
| **d1 - Outer dia of eccent. Lock. collar / nut of adapter sleeve** | 74,5 mm |
| **e - Distance mounting surface to bearing center** | 31 mm |
| **G - Grease fitting** | R1/8" |
| **J - Mounting holes distance** | 130 mm |
| **L - Housing width / diameter** | 162 mm |
| **N - Mounting hole dimension** | 18 mm |
| **S - Distance front side/bearing centre** | 12 mm |

| PRODUCT PERFORMANCE | |
|---|---|
| **C - Dynamic load rating** | 43550000 mN |
| **C0 - Static load rating** | 29200000 mN |
| **Operating temperature min.** | 253,15 °K |
| **Operating temperature max.** | 373,15 °K |

| OTHER FEATURES | |
|---|---|
| **Mass** | 3,41 kg |
| **Recommended tightening torque for set screw** | 22 N-m |