E12712

Damping magnet

MAGNET M3.1 IATA E12291 5X

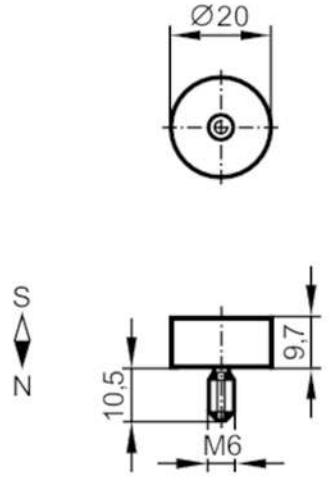

Operating conditions		
Ambient temperature	[°C]	-25...250
Mechanical data		
Weight	[g]	162
Dimensions	[mm]	Ø 20
Materials		hard ferrite HF 26/22; stainless steel (1.4571/316Ti)
Magnetic field strength	[mT]	70
Remarks		
Pack quantity		5 pcs.