User's Guide

Part Number: E3646-90001
May 2009.

For Warranty information, refer to the back of the manual.

© Copyright Agilent Technologies, Inc. 2000 - 2009
All Rights Reserved.

Agilent E364xA Dual Output DC Power Supplies



Agilent Technologies

The Agilent Technologies E3646A/E3647A (30 watt) and E3648A/E3649A (50 watt) are high performance dual-output dual range programmable DC power supplies with GPIB and RS-232 interfaces. The combination of bench-top and system features in these power supplies provides versatile solutions for your design and test requirements.

Convenient bench-top features

- Dual-output dual range
- Output on/off
- High accuracy and high resolution
- Excellent load and line regulation
- Low ripple and noise
- Overvoltage protection
- Five Operating states storage
- Tracking operation
- Easy-to-use controls
- Remote voltage sensing
- Front and Rear output terminals
- Portable, ruggedized case with non-skid feet
- Error messages available on the display

Flexible system features

- GPIB (IEEE-488) and RS-232 interfaces are standard
- SCPI (Standard Commands for Programmable Instruments) compatibility
- I/O setup easily done from front-panel
- Software calibration, no internal physical adjustments

Agilent Technologies E364xA Dual Output DC Power Supplies

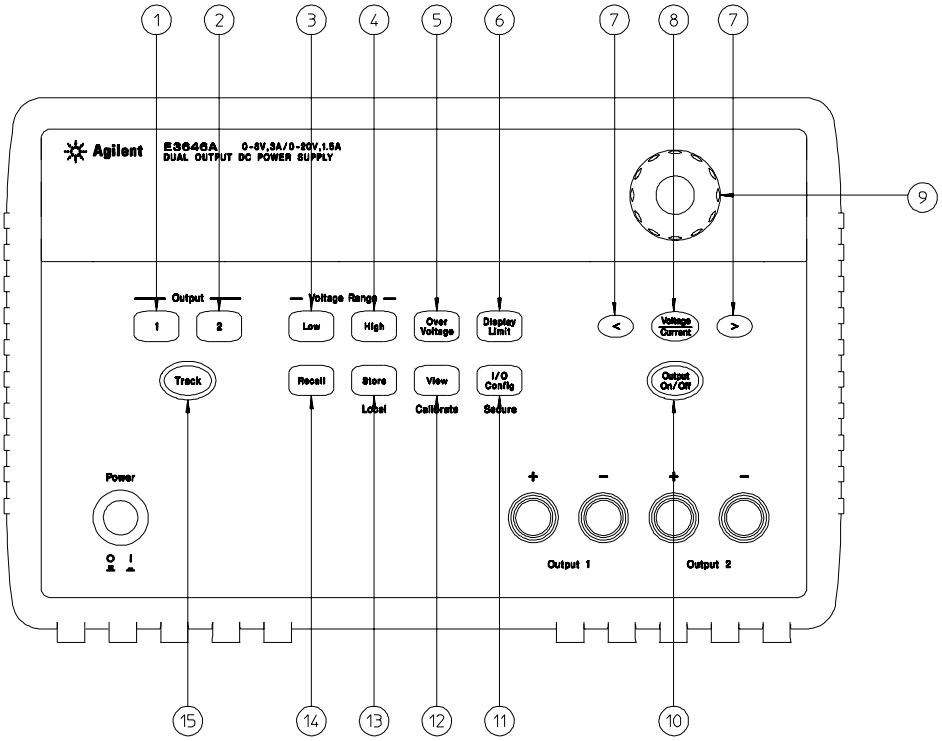

1 Output1 selection Key
2 Output2 selection Key
3 Low voltage range selection Key
4 High voltage range selection Key
5 Overvoltage protection Key
6 Display limit Key
7 Resolution selection Keys
8 Voltage / Current adjust selection Key
9 Knob
10 Output On / Off Key
11 I/O Configuration Menu / Secure Key
12 View Menu / Calibrate Key
13 State Storage Menu / Local Key
14 Stored state Recall/Reset Menu
15 Tracking enabling/disabling Key

This section gives an overview of the front-panel keys/menus. The menus are designed to automatically guide you through all parameters required to configure a particular function or operation.

1 **Output1 selection key** Select the output1 voltage and current to be controlled and monitored on the display.

2 **Output2 selection key** Select the output2 voltage and current to be controlled and monitored on the display.

3 **Low voltage range selection key** Selects the low voltage range and allows its full rated output to the output terminals.

4 **High voltage range selection key** Selects the high voltage range and allows its full rated output to the output terminals.

5 **Overvoltage protection key** Enables or disables the overvoltage protection function, sets trip voltage level, and clears the overvoltage condition.

6 **Display limit key** Shows voltage and current limit values on the display and allows the knob adjustment for setting limit values.

7 **Resolution selection keys** Move the flashing digit to the right or left. Adjust the scrolling speed of the text being displayed in the View menu.

8 **Voltage/Current adjust selection key** Selects the knob control function for voltage or current adjustment.

9 **Knob** Increases or decreases the value of the flashing digit by turning clockwise or counter clockwise.

10 **Output On/Off key** Enables or disables the power supply output. This key toggles between on and off.

11 **I/O Configuration / Secure key**[3] Configures the power supply for remote interfaces / or secures or unsecures the power supply for calibration.

12 **View menu / Calibrate key**[2] Views the error codes and the text of the error message, calibration string, and system firmware revision / or enables calibration mode.

13 **State storage menu / Local key**[1] Stores up to five power supply's states and assigns a name to each of the storage locations / or returns the power supply to local mode from remote interface mode.

14 **Stored state Recall menu** Recalls a stored operating state from location "1" through "5" and resets the power supply to the power-on state (*RST command).

15 **Tracking enabling/disabling key** Enable / disable the track mode of the outputs.

[1]The key can be used as the "**Local**" key when the power supply is in the remote interface mode.
[2]You can enable the "calibration mode" by holding down this key when you turn on the power supply.
[3]You can use it as the "Secure" or "Unsecure" key when the power supply is in the calibration mode.

You can set the voltage and current limit values from the front panel using the following method.

Use the voltage/current adjust selection key, the resolution selection keys, and the control knob to change the voltage and current limit values.

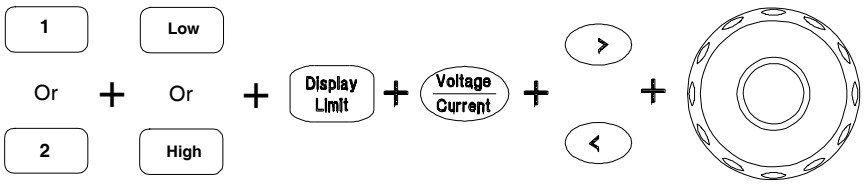

1. Select the desired output and voltage range using the output selection keys and voltage range selection keys after turning on the power supply.
2. Press Display Limit key to show the limit values on the display.
3. Move the blinking digit to the appropriate position using the resolution selection keys and change the blinking digit value to the desired voltage limit by turning the control knob. If the display limit times out, press Display Limit key again.
4. Set the knob to current control mode by pressing Voltage Current key.
5. Move the blinking digit to the appropriate position using the resolution selection keys and change the blinking digit value to the desired current limit by turning the control knob.
6. Press Output On/Off key to enable the output. After about 5 seconds, the display will go to output monitoring mode automatically to display the voltage and current at the output.

N o t e

*All front panel keys and controls can be disabled with remote interface commands. The power supply must be in "***Local***" mode for the front panel keys and controls to function.*

Display Annunciators

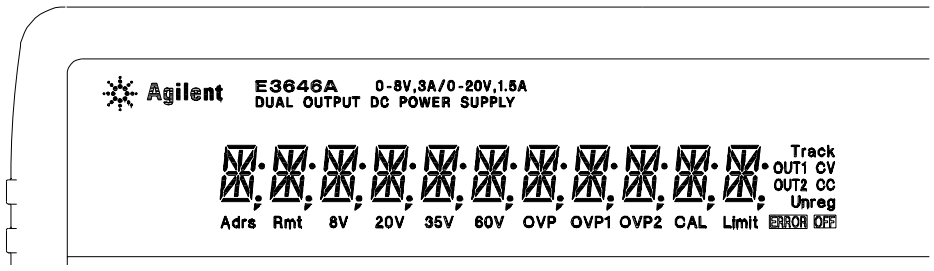

Adrs	Power supply is addressed to listen or talk over a remote interface.
Rmt	Power supply is in remote interface mode.
8V*/35V**	Shows the low voltage range is selected.
20V*/60**	Shows the high voltage range is selected.
OUT1	The output1 is selected for front-panel or remote operation.
OUT2	The output2 is selected for front-panel or remote operation.
OVP1	The output1 overvoltage protection function is enabled when the **OVP1** annunciator turns on or the overvoltage protection circuit has caused the power supply to shutdown when the annunciator blinks.
OVP2	The output2 overvoltage protection function is enabled when the **OVP2** annunciator turns on or the overvoltage protection circuit has caused the power supply to shutdown when the annunciator blinks.
CAL	The power supply is in calibration mode.
Limit	The display shows the limit values of voltage and current.
ERROR	Hardware or remote interface command errors are detected and the error bit has not been cleared.
OFF	The output of the power supply is disabled (See page 56 for more information).
Unreg	The output of the power supply is unregulated (output is neither CV nor CC).
CV	The power supply is in constant voltage mode.
CC	The power supply is in constant current mode.
TRACK	The output1 and output2 are in track mode.

To review the display annunciators, hold down Display Limit key as you turn on the power supply.

*For E3646A/48A models. **For E3647A/49A models.

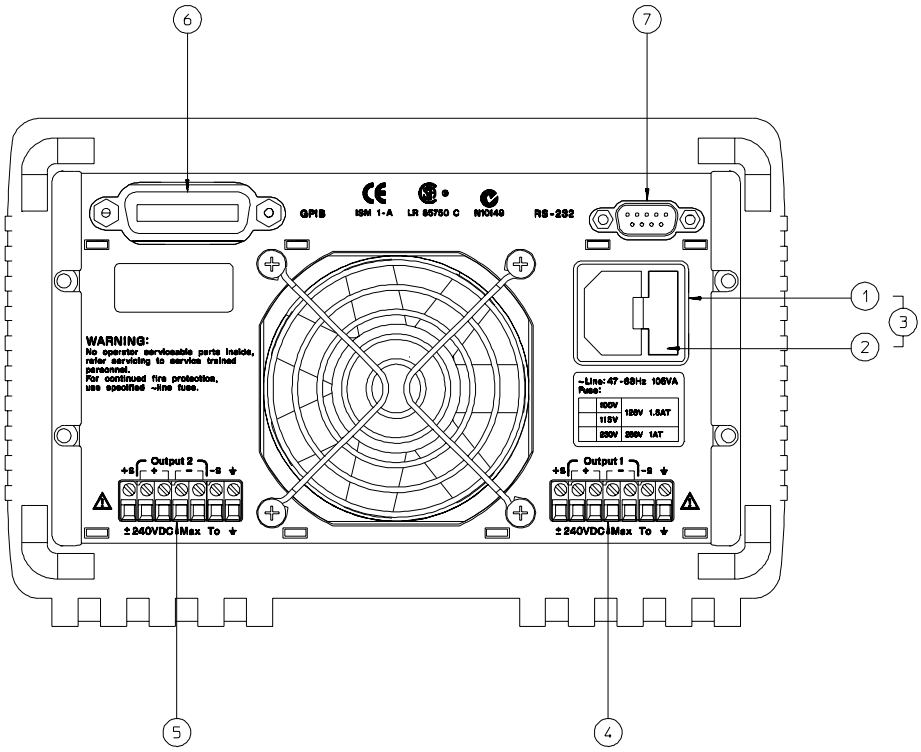

1 AC inlet
2 Power-line fuse-holder assembly
3 Power-line module
4 Output 1 Rear output terminals
5 Output 2 Rear output terminals
6 GPIB (IEEE-488) interface connector
7 RS-232 interface connector

Use the front-panel I/O Config **key to:**

- Select the GPIB or RS-232 interface (see chapter 3).
- Set the GPIB address (see chapter 3).
- Set the RS-232 baud rate and parity (see chapter 3).

In This Book

Quick Start Chapter 1 helps you get familiar with a few of the power supply's the front panel feature.

General Information Chapter 2 contains a general description of your power supply. This chapter also provides instructions for installation of your power supply and the output connections.

Front-Panel Operation Chapter 3 describes in detail the use of front-panel keys and how they are used to operate the power supply from the front panel. This chapter also shows how to configure the power supply for the remote interface and gives a brief introduction to the calibration features.

Remote Interface Reference Chapter 4 contains reference information to help you program the power supply over the remote interface. This chapter also explains how to program for status reporting.

Error Messages Chapter 5 lists the error messages that may appear as you are working with the power supply. Each listing contains information to help you diagnose and solve the problem.

Application Programs Chapter 6 contains some remote interface applications to help you develop programs for your application.

Tutorial Chapter 7 describes basic operation of linear power supplies and gives specific details on the operation and use of your power supply.

Specifications Chapter 8 lists the power supply's specifications.

Service Information Contains guidelines to return your power supply to Agilent Technologies for servicing, procedures for verification & calibration, and component locator diagram.

*If you have questions relating to the operation of the power supply, call **1-800-829-4444** in the United States, or contact your nearest Agilent Technologies Sales Office.*

*If your power supply fails within one year of purchase, Agilent will repair or replace it free of charge. Call **1-800-258-5165** ("**Express Exchange**") in the United States, or contact your nearest Agilent Technologies Sales Office.*

Chapter 1 Quick Start

Preliminary Checkout ---- 17
Output Checkout ---- 18
Voltage Output Checkout ---- 18
Current Output Checkout ---- 19
If the Power Supply Does Not Turn On ---- 20
Line Voltage Conversion ---- 21
To Rack Mount the Instrument ---- 23

Chapter 2 General Information

Safety Considerations ---- 27
Safety and EMC Requirements ---- 27
Options and Accessories ---- 28
Options ---- 28
Accessories ---- 28
Description ---- 29
Installation ---- 31
Initial Inspection ---- 31
Cooling and Location ---- 31
Output Connections ---- 32
Current Ratings ---- 32
Voltage Drops ---- 33
Load Consideration ---- 33
Remote Voltage Sensing Connections ---- 34
Multiple Loads ---- 36

Chapter 3 Front-Panel Operation and Features

Front-Panel Operation Overview ---- 39
Constant Voltage Operation ---- 40
Constant Current Operation ---- 42
Tracking Operation ---- 44
View Menu Operation ---- 45
Changing Display Mode ---- 45
Viewing the Errors ---- 46
Viewing the Firmware Revision ---- 46
Viewing the Calibration String ---- 47
Configuring the Remote Interface ---- 48
GPIB Configuration ---- 48
RS-232 Configuration ---- 49
Storing and Recalling Operating States ---- 50

Programming Overvoltage Protection ---- 52
Setting the OVP Level and Enable the OVP Circuit ---- 52
Checking OVP Operation ---- 53
Clearing the Overvoltage Condition ---- 53
Disabling the Output ---- 56
Disconnecting the Output Using an External Relay ---- 56
System-Related Operations ---- 57
State Storage ---- 57
Self-Test ---- 58
Error Conditions ---- 58
Firmware Revision Query ---- 59
SCPI Language Version ---- 59
GPIB Interface Reference ---- 60
RS-232 Interface Reference ---- 61
RS-232 Configuration Overview ---- 61
RS-232 Data Frame Format ---- 61
Connection to a Computer or Terminal ---- 62
RS-232 Troubleshooting ---- 63
Calibration Overview ---- 64
Calibration Security ---- 64
To Unsecure for Calibration ---- 65
To Secure Against Calibration ---- 66
Calibration Count ---- 67
Calibration Message ---- 68

Chapter 4 Remote Interface Reference

SCPI Command Summary ---- 71
Simplified Programming Overview ---- 77
Using the **APPLy** Command ---- 77
Using the Low-Level Commands ---- 77
Reading a Query Response ---- 78
Selecting a Trigger Source ---- 78
Power Supply Programming Ranges ---- 79
Using the **APPLy** Command ---- 80
Output Setting and Operation Commands ---- 81
Triggering ---- 87
Trigger Source Choices ---- 87
Triggering Commands ---- 89
System-Related Commands ---- 90
State Storage Commands ---- 93
Calibration Commands ---- 94
Interface Configuration Commands ---- 97

The SCPI Status Registers ---------- 98
What is an *Event* Register? ---------- 98
What is an *Enable* Register? ---------- 98
What is a *Multiple* Logical Output? ---------- 98
SCPI Status System ---------- 100
The Questionable Status Register ---------- 101
The Standard Event Register ---------- 103
The Status Byte Register ---------- 104
Using Service Request (SRQ) and Serial POLL ---------- 105
Using *STB? to Read the Status Byte ---------- 106
Using the Message Available Bit (MAV) ---------- 106
To Interrupt Your Bus Controller Using SRQ ---------- 106
To Determine When a Command Sequence is Completed - 107
Using *OPC to Signal When Data is in the Output Buffer -- 107
Status Reporting Commands ---------- 108
An Introduction to the SCPI Language ---------- 111
Command Format Used in This Manual ---------- 112
Command Separators ---------- 113
Using the *MIN* and *MAX* Parameters ---------- 113
Querying Parameter Settings ---------- 114
SCPI Command Terminators ---------- 114
IEEE-488.2 Common Commands ---------- 114
SCPI Parameter Types ---------- 115
Halting an Output in Progress ---------- 116
SCPI Conformance Information ---------- 117
IEEE-488 Conformance Information ---------- 120

Chapter 5 Error Messages

Execution Errors ---------- 123
Self-Test Errors ---------- 129
Calibration Errors ---------- 130

Chapter 6 Application Programs

Example Program for C and C++ ---------- 135
Example Program for Excel 97 ---------- 139

Chapter 7 Tutorial

Overview of this Power Supply Operation ---------- 147
Output Characteristics ---------- 149
Unregulated State ---------- 151
Unwanted Signals ---------- 151
Extending the Voltage and Current Range ---------- 153
Series Connections ---------- 153

Parallel Connections ---- 153
Remote Programming ---- 154

Chapter 8 Specifications

Performance Specifications ---- 159
Supplemental Characteristics ---- 161

Appendix Service Information

Operating Checklist ---- 167
Is the Power Supply Inoperative? ---- 167
Does the Power Supply Fail Self-Test? ---- 167
Types of Service Available ---- 168
Standard Repair Service (worldwide) ---- 168
Express Exchange (U.S.A. only) ---- 168
Repacking for Shipment ---- 169
Electrostatic Discharge (ESD) Precautions ---- 170
Surface Mount Repair ---- 170
To Replace the Power-Line Fuse ---- 170
Troubleshooting Hints ---- 171
Unit Reports Errors 740 to 750 ---- 171
Unit Fails Self-Test ---- 171
Bias Supplies Problems ---- 171
Self-Test Procedures ---- 172
Power-On Self-Test ---- 172
Complete Self-Test ---- 172
General Disassembly ---- 174
Recommended Test Equipment ---- 175
Test Considerations ---- 176
Operation Verification and Performance Tests ---- 176
Measurement Techniques ---- 177
Setup for Most Tests ---- 177
Current-Monitoring Resistor ---- 177
General Measurement Techniques ---- 178
Electronic Load ---- 178
Programming ---- 178
Constant Voltage (CV) Verifications ---- 179
Constant Voltage Test Setup ---- 179
Voltage Programming and Readback Accuracy ---- 179
CV Load Effect (Load Regulation) ---- 180
CV Source effect (Line Regulation) ---- 181
CV PARD (Ripple and Noise) ---- 182
Load Transient Response Time ---- 184

Constant Current (CC) Verifications ---------- 185
Constant Current Test Setup ---------- 185
Current Programming and Readback Accuracy --------- 185
CC Load Effect (Load Regulation) ---------- 186
CC Source Effect (Line Regulation) ---------- 187
CC PARD (Ripple and Noise) ---------- 188
Common Mode Current Noise ---------- 189
Performance Test Record for Your Power Supply ---------- 190
CV Performance Test Record ---------- 190
CC Performance Test Record ---------- 191
Calibration Reference ---------- 192
Agilent Technologies Calibration Services ---------- 192
Calibration Interval ---------- 192
To Unsecure the Power Supply Without the Security Code 192
General Calibration/Adjustment Procedure ---------- 193
Front Panel Voltage and Current Calibration ---------- 194
Calibration Record for Your Power Supply ---------- 198
Calibration Error Messages ---------- 199
Schematics ---------- 200
Component Locator (top) for main board assembly ------ 201
Component Locator (bottom) for main board assembly -- 202
Component Locator (top & bottom) for digital board assembly ---------- 203
Component Locator for front panel ---------- 204
Index ---------- 205

1

Quick Start

Quick Start

One of the first things you will want to do with your power supply is to become acquainted with the front panel. The exercises in this chapter prepare the power supply for use and help you get familiar with some of its front-panel operations.

This chapter is intended for both the experienced and the inexperienced user because it calls attention to certain checks that should be made prior to operation.

Throughout this chapter the key to be pressed is shown in the left margin.

Preliminary Checkout

The following steps help you verify that the power supply is ready for use.

1 Check the list of supplied items.

Verify that you have received the following items with your power supply. If anything is missing, contact your nearest Agilent Technologies Sales Office.

- ❑ One power cord for your location.
- ❑ *This User's* Guide.
- ❑ Quick Reference Guide.
- ❑ Certificate of Calibration.

2 Connect the power cord and turn on the power supply.

The front-panel display will light up briefly while the power supply performs its *power-on self-test*. The GPIB address is also displayed. To review the power-on display with all annunciators turned on, hold down (Display Limit) as you turn on the power supply. If the power supply does not turn on properly, see page 20.

3 Perform a *complete* self-test.

The *complete* self-test performs a more extensive set of tests than those performed at power-on. Hold down (Display Limit) as you turn on the power supply and hold down the key *until you hear a long beep*. The *self-test* will begin when you release the key following the beep.

If the self-test fails, see the Service Information for instructions on returning the power supply to Agilent Technologies for service.

Note

The power supply is shipped from the factory with a power-line cord that has a plug appropriate for your location. Your power supply is equipped with a 3-wire grounding type power cord; the third conductor being the ground. The power supply is grounded only when the power-line cord is plugged into an appropriate receptacle. Do not operate your power supply without adequate cabinet ground connection.

Output Checkout

The following procedures check to ensure that the power supply develops its rated outputs and properly responds to operation from the front panel. For complete performance and verification tests, refer to the *Service Information*.

Note: If an error has been detected during the output checkout procedures, the **ERROR** annunciator will turn on. See "Error Messages" starting on page 121 in chapter 5 for more information.

Voltage Output Checkout

The following steps verify basic voltage functions with no load.



1 Turn on the power supply.

The power supply will go into the *power-on / reset* state; the outputs are disabled (the **OFF** annunciator turns on); its output1 and low voltage range are selected. The annunciator **OVP1**, **OVP2**, **CV**, **OUT1**, and low voltage range indication annunciator turn on (for example, **8V** annunciator turns on for the E3646A model); and the knob is selected for voltage control.



2 Enable the outputs.

The **OFF** annunciator turns off and the **CV** annunciator turns on. Notice that the display is in the *meter* mode. "Meter mode" means that the display shows the actual output voltage and current.



3 Check that the front-panel voltmeter properly responds to knob control for both low and high voltage range.

Turn the knob clockwise or counter clockwise to check that the voltmeter responds to knob control and the ammeter indicates nearly zero. The *flashing* digit can be adjusted by turning the knob.



4 Ensure that the voltage can be adjusted from zero to the full rated value by adjusting the knob.

[1] *You can use the resolution selection keys to move the flashing digit to the right or left when setting the voltage.*

Current Output Checkout

The following steps check basic current functions with a short across the power supply's output.



1 Turn on the power supply.

Make sure that the output is disabled. The **OFF** annunciator is on

2 Connect a short across (+) and (-) output terminals with an insulated test lead.

Use a wire size sufficient to handle the maximum current (See "Table 2-1 Wire Rating" on page 32 in chapter 2).



3 Enable the output.

The **CV** or **CC** annunciator turns on depending on the resistance of the test lead. Notice that the display is in the *meter* mode.



4 Adjust the voltage limit value to 1.0 volt.

Set the display to the *limit* mode (the **Limit** annunciator will be flashing). Adjust the voltage limit to 1.0 volt to assure CC operation. The **CC** annunciator will turn on. To go back to normal mode, press the Display Limit key again or let the display time out after several seconds.



5 Set the knob to the current control to check that the front-panel ammeter properly responds to knob control.

Turn the knob clockwise or counter clockwise when the display is in the *meter* mode (the **Limit** annunciator is off). Check that the ammeter responds to knob control and the voltmeter indicates nearly zero (the voltmeter will show the voltage drop caused by the test lead). The *flashing* digit can be adjusted by turning the knob.



6 Ensure that the current can be adjusted from zero to the full rated value.

7 Turn off the power supply and remove the short from the output terminals.

[1] *You can use the resolution selection keys to move the flashing digit to the right or left when setting the current.*

If the Power Supply Does Not Turn On

Use the following steps to help solve problems you might encounter when turning on the instrument. If you need more help, refer to chapter 5 for instructions on returning the instrument to Agilent Technologies for service.

1 **Verify that there is ac power to the power supply.**

First, verify that the power cord is firmly plugged into the power receptacle on the rear panel of the power supply. You should also make sure that the power source you plugged the power supply into is energized. Then, verify that the power supply is turned on.

2 **Verify the power-line voltage setting.**

The line voltage is set to the proper value for your country when the power supply is shipped from the factory. Change the voltage setting if it's not correct. The settings are: 100, 115, or 230 Vac.

3 **Verify that the correct power-line fuse is installed.**

The correct fuse is installed for your country when the power supply is shipped from the factory. See the table below to replace the fuse for your power supply.

Model	Agilent Part Number	Part Description
E3646A/47A	2110-1070	Fuse 2.5A T 125V for 100 and 115 Vac
E3646A/47A	2110-0457	Fuse 1A T 250V for 230Vac
E3648A/49A	2110-0996	Fuse 4A T 250V for 100 and 115 Vac
E3648A/49A	2110-1068	Fuse 2A T 250V for 230 Vac

See the next page if you need to change the line voltage setting and the power-line fuse.

Line Voltage Conversion

Warning

Shock Hazard *Operating personnel must not remove power supply covers. Component replacement and internal adjustments must be made only by qualified service personnel.*

Line voltage conversion is accomplished by adjusting two components: the line voltage selection switch and the power-line fuse on the rear panel.

1. Remove AC line power.
2. Remove the cover (Refer to General Disassembly on page 174).
3. Set two sections of the line voltage selector switch on the PC board for the desired line voltage (See Figure 1-1 below).
4. See the next page to check the rating of the power-line fuse and replace with the correct one if necessary.
5. Replace the cover and mark the power supply clearly with a tag or label indicating the correct line voltage and fuse that is in use.

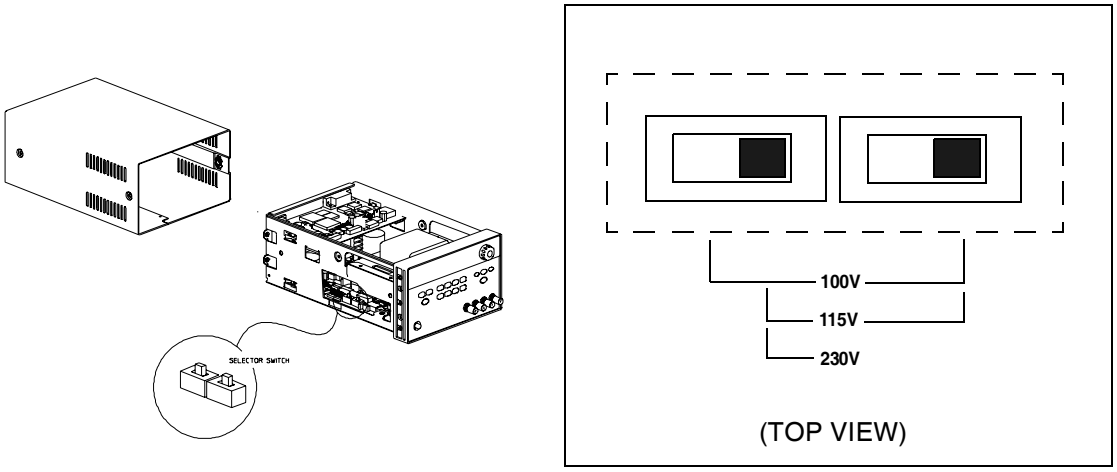

Figure 1-1. Line Voltage Selector (set for 115Vac)

1 Remove the power cord. Remove the fuse-holder assembly with a flat-blade screwdriver from the rear panel.

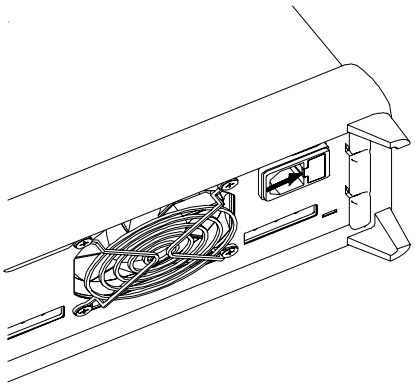

2 Remove the fuse-holder from the assembly.

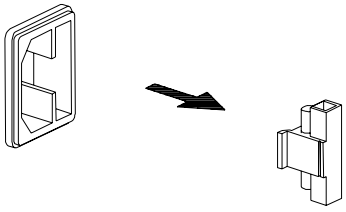

3 Replace with the correct fuse.

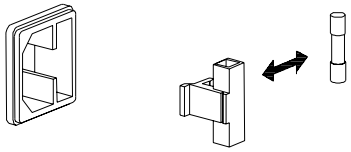

4 Replace the fuse-holder assembly in rear panel.

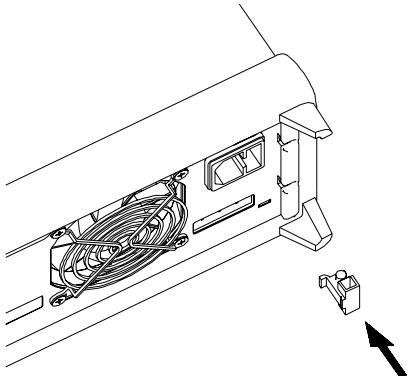

Verify that the correct line voltage is selected and the power-line fuse is good.

To Rack Mount the Instrument

You can mount the power supply in a standard 19-inch rack cabinet using one of three optional kits available. Instructions and mounting hardware are included with each rack-mounting kit. Any Agilent Technologies System II instrument of the same size can be rack-mounted beside the Agilent E3646A, E3647A, E3648A, or E3649A.

Note: *Remove the front and rear rubber bumpers before rack-mounting the instrument.*

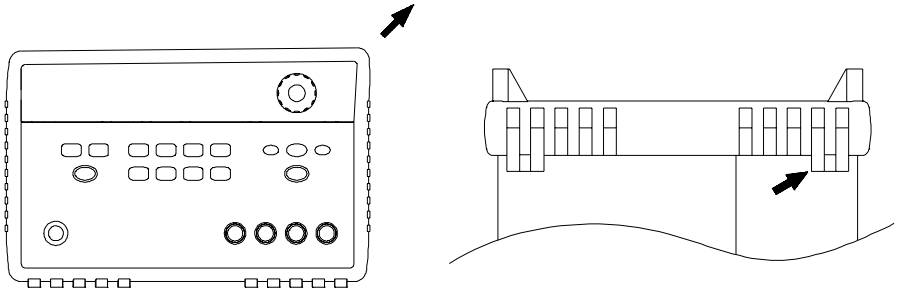

Front

Rear (bottom view)

To remove the rubber bumper, stretch a corner and then slide it off.

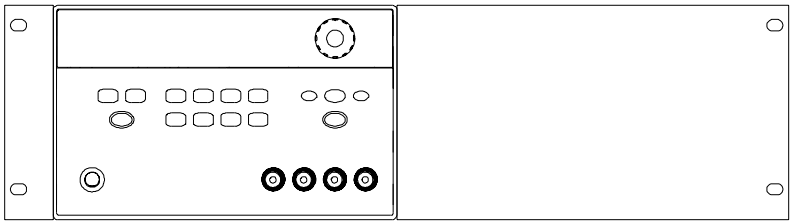

To rack mount a single instrument, order adapter kit 5063-9243.

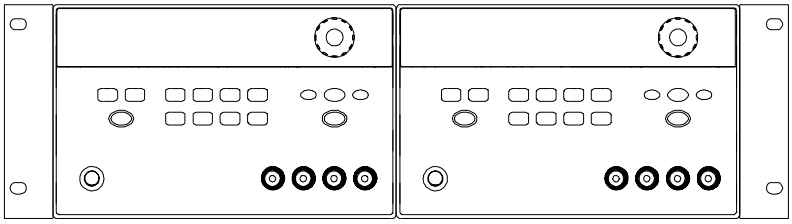

To rack mount two instruments of the same depth side-by-side, order lock-link kit 5061-9694 and flange kit 5063-9214.

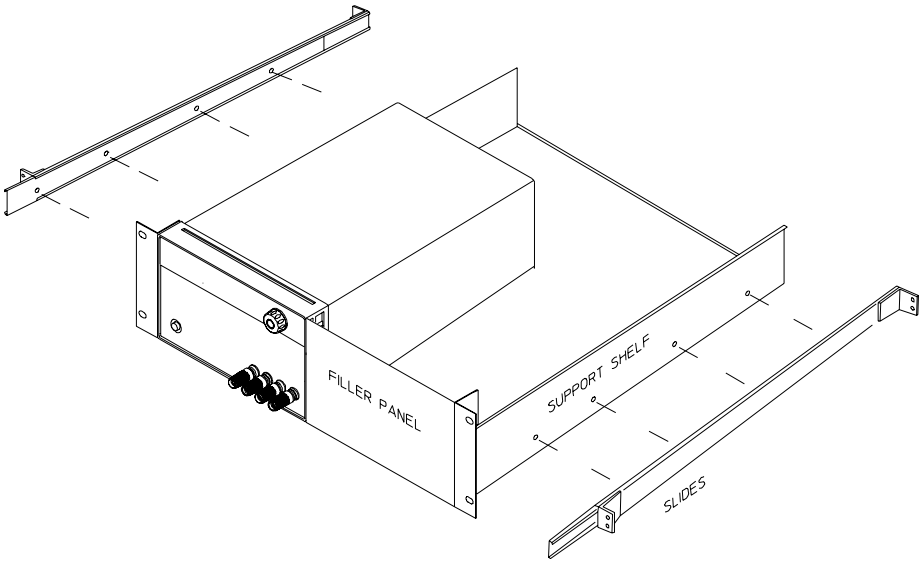

To install two instruments in a sliding support shelf, order support shelf 5063-9256, and slide kit 1494-0015.

General Information

General Information

This manual describes the operation of the Agilent Technologies Model E3646A, E3647A, E3648A, and E3649A DC power supplies.

This chapter contains a general description of your power supply. This chapter also provides instructions for installation of your power supply and the output connections. Unless otherwise stated, the information in this manual applies to all the four models. This chapter is divided into the following sections:

- Safety Considerations, on page 27
- Options and Accessories, on page 28
- Description, starting on page 29
- Installation, on page 31
- Output Connections, on page 32

Safety Considerations

This power supply is a Safety Class I instrument, which means that it has a protective earth terminal. That terminal must be connected to earth ground through a power source with a 3-wire ground receptacle.

Before installation or operation, check the power supply and review this manual for safety markings and instructions. Safety information for specific procedures is located at the appropriate places in this manual. See also "*Safety*" at the beginning of this manual for general safety information.

Safety and EMC Requirements

This power supply is designed to comply with the following safety and EMC (Electromagnetic Compatibility) requirements:

- IEC 1010-1(1990)/EN 61010-1(1993) + A2 (1995): Safety Requirements for Electrical Equipment for Measurement, Control, and Laboratory Use
- CSA C22.2 No.1010.1-92: Safety Requirements for Electrical Equipment for Measurement, Control, and Laboratory Use
- EN61326-1(1997):
  EN 61000-4-2(1995): Electrostatic Discharge Requirements
  EN 61000-4-3(1996): Radiated Electromagnetic Field Requirements
  EN 61000-4-4(1995): Electrical Fast Transient/Burst Requirements
  EN61000-4-5(1995): Surge Requirements
  EN61000-4-6(1996): Conducted Radio Frequency Immunity Requirements
  EN61000-4-8(1993): Magnetic Field Requirements
  EN61000-4-11(1994): Voltage dips, short, interruption and var Requirement
  EN 55011(1991) Group 1, Class A/CISPR 11(1990): Limits and Methods of Radio Interference Characteristics of Industrial, Scientific, and Medical (ISM) Radio - Frequency Equipment
- Low Voltage Directive 73/23/EEC
- EMC Directive 89/336/EEC
- ICES/NMB-001
  This ISM device complies with Canadian ICES-001.
  Cet appareil ISM est conforme à la norme NMB-001 du Canada.

Options and Accessories

Options

Options 0EM, 0E3, and 0E9 determine which power-line voltage is selected at the factory. The standard unit is configured for 115 Vac ± 10%, 47-63 Hz input voltage. For more information about changing the power-line voltage setting, see Line Voltage Conversion on page 21.

Option	Description
0EM	**115** Vac ± 10%, 47-63 Hz input voltage
0E3	230 Vac ± 10%, 47-63 Hz input voltage
0E9	100 Vac ± 10%, 47-63 Hz input voltage
1CM	Rack mount kit (Agilent part number 5063-9243)
0L2	Extra English manual set (local language manual files are included on the CD-ROM, Agilent part number 5964-8251)

Accessories

The accessories listed below may be ordered from your local Agilent Technologies Sales Office either with the power supply or separately.

Agilent No.	Description
10833A	GPIB cable, 1 m (3.3 ft.)
10833B	GPIB cable, 2 m (6.6 ft.)
34398A	RS-232, 9 pin (f) to 9 pin (f), 2.5 m (8.2 ft.) cable; plus 9 pin (m) to 25 pin (f) adapter
34399A	RS-232 adapter kit (contains 4 adapters): 9 pin (m) to 25 pin (m) for use with PC or printer 9 pin (m) to 25 pin (f) for use with PC or printer 9 pin (m) to 25 pin (m) for use with modem 9 pin (m) to 9 pin (m) for use with modem

Description

This power supply features a combination of programming capabilities and linear power supply performance that makes it ideal for power systems applications. The power supply may be programmed locally from the front panel or remotely over the GPIB and RS-232 interfaces. This power supply has two ranges, allowing more voltage at a lower current or more current at a lower voltage. The output range is selected from the front panel or over the remote interfaces.

Operational features include:

- Dual-output dual range
- Constant voltage (CV) or constant current (CC) operation
- Overvoltage protection (OVP)
- Five storage locations (1 to 5) for user-defined operating states
- Automatic turn-on self-test
- Remote sense at rear panel terminals
- User calibration from the front panel or over the remote interfaces

The front panel operation permits:

- Easy-to-use control features
- Output (1 or 2) and output voltage range selection
- Enabling or disabling OVP
- OVP trip level setting and condition clearing
- Setting and displaying the voltage and current limit values
- Operating state storage/recall
- Resetting the power supply to power-on state
- Returning the power supply to local mode from remote mode
- Retrieving/Scrolling error messages on the display
- Changing display mode (V-V, I-I, or V-I display)
- Viewing the errors, calibration string, or system firmware revision
- Enabling or disabling Tracking mode
- Calibrating the power supply, including changing calibration secure code
- Remote interface configuration
- Enabling or disabling the output

When operated over the remote interface, the power supply can be both a listener and a talker. Using an external controller, you can instruct the power supply to set the output and to send the status data back over the GPIB or RS-232. Capabilities include the following features:

- Voltage and current programming
- Voltage and current readback
- Present and stored status hardback
- Programming syntax error detection
- Complete self-test

The front-panel VFD (Vacuum-Fluorescent Display) includes:

- Displaying actual values of output voltage and current (meter mode)
- Or displaying the limit values of voltage and current (limit mode)
- Checking the operating status from the annunciators
- Checking the type of error from the error codes (messages)

Front panel binding posts are available to connect load wires for *bench* operation. Connections to the power supply's output and to chassis ground are made to the *rear output* terminals.

Warning

Floating the power supply output more than ±60 Vdc from the chassis presents an electric shock hazard to the operator. Do not float the outputs more than ±60 Vdc when uninsulated sense wires are used to connect the (+) output to the (+) sense and the (-) output to the (-) sense terminals on the back of the unit.

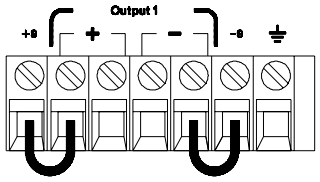

(Rear Output Terminals)

1. Float voltage +/-60 Vdc Max to (⏚)
   (shorting conductors without insulation)

2. Float voltage +/-240 Vdc Max to (⏚)
   (Insulated shorting conductors)

Installation

Initial Inspection

When you receive your power supply, inspect it for any obvious damage that may have occurred during shipment. If any damage is found, notify the carrier and the nearest Agilent Technologies Sales Office immediately. Warranty information is shown in the front of this manual.

Keep the original packing materials in case the power supply has to be returned to Agilent Technologies in the future. If you return the power supply for service, attach a tag identifying the owner and model number. Also include a brief description of the problem.

Mechanical Check

This check confirms that there are no broken terminals or knob and that the cabinet and panel surfaces are free of dents and scratches. Verify that the display is not scratched or cracked.

Electrical Check

Chapter 1 describes quick operation procedure that verifies to a high level of confidence that the power supply is operating in accordance with its specifications. More complete verification procedures are included in the *Service Information*.

Cooling and Location

Cooling

The power supply can operate at rated specifications within the temperature range of 0 °C to 40 °C, Power supply loading is derated from 40 °C to 55 °C. A fan cools the power supply by drawing air through the sides and exhausting it out the back. Using an Agilent rack mount will not impede the flow of air.

Bench Operation

Your power supply must be installed in a location that allows sufficient space at the sides and rear of the power supply for adequate air circulation. The rubber bumpers must be removed for rack mounting.

Cleaning

No cleaning is required for this product. If you wish to remove dust from the enclosure, use a dry cloth.

Output Connections

Warning ***Before attempting to connect wires to the rear output terminals, make sure to turn off the power supply first to avoid damage to the circuits being connected.***

Front panel binding posts are available to connect load wires for bench operation and are paralleled with the rear panel (+) and (-) connections. Both front and rear panel terminals are optimized for noise, regulation, and transient response as documented in chapter 8.

Available connections on the rear output terminals include the (+) and (-) output, the (+) and (-) sense terminals, and an earth ground terminal. The rear output terminals accept wire sizes from AWG 24 to AWG 14.

Note: When making load connections from the rear output terminals, four load wire connection is recommended to keep good CV load regulation if carrying full-rated current of the power supply.

Current Ratings

The following table lists the characteristics of AWG (American Wire Gage) copper wire.

Table 2-1 Wire Rating

AWG	10	12	14	16	18	20	22	24	26	28
Suggested maximum Current(amps)*	40	25	20	13	10	7	5	3.5	2.5	1.7
mΩ/ft	1.00	1.59	2.53	4.02	6.39	10.2	16.1	25.7	40.8	64.9
mΩ/m	3.3	5.2	8.3	13.2	21.0	33.5	52.8	84.3	133.9	212.9
*Single conductor in free air at 30 °C with insulation										

Warning *To satisfy safety requirements, load wires must be heavy enough not to overheat when carrying the maximum short-circuit output current of the power supply. If there is more than one load, then any pair of load wires must be capable of safety carrying the full-rated current of the power supply.*

Voltage Drops

The load wires must also be large enough to avoid excessive voltage drops due to the impedance of the wires. In general, if the wires are heavy enough to carry the maximum short circuit current without overheating, excessive voltage drops will not be a problem. The voltage drops across the load wires should be limited to less than two volts. Refer to Table 2-1 to calculate the voltage drop for some commonly used AWG copper wire.

Load Consideration

Capacitive Loading

The power supply will be stable for almost any size load capacitance. However, large load capacitors may cause transient response ringing. Certain combinations of load capacitance, equivalent series resistance, and load lead inductance may result in instability (oscillation). If this occurs, the problem may often be solved by either increasing or decreasing the size of the capacitive load.

A large load capacitor may cause the power supply to cross into CC or unregulated mode momentarily when the output voltage is reprogrammed. The slew rate of the output voltage will be limited to the current setting divided by the total load capacitance (internal and external).

Inductive loading

Inductive loads present no loop stability problems in constant voltage mode. In constant current mode, inductive loads form a parallel resonance with the power supply's output capacitor. Generally this will not affect the stability of the power supply, but it may cause ringing of the current in the load.

Pulse Loading

In some applications the load current varies periodically from a minimum to a maximum value. The constant current circuit limits the output current. Some peak loading exceeding the current limit can be obtained due to the output capacitor. To stay within the specifications for the output, the current limit should be set greater than the peak current expected or the supply may go into CC mode or unregulated mode for brief periods.

Reverse Current Loading

An active load connected to the power supply may actually deliver a reverse current to the supply during a portion of its operating cycle. An external source can not be allowed to pump current into the supply without risking loss of regulation and possible damage. These effects can be avoided by pre-loading the output with a dummy load resistor. The dummy load resistor should draw at least the same amount of current from the supply as the active load may deliver to the supply. The value of the current for the dummy load plus the value of the current the load draws from the supply must be less than the maximum current of the supply.

Remote Voltage Sensing Connections

Remote voltage sensing is used to maintain regulation at the load and reduce the degradation of regulation that would occur due to the voltage drop in the leads between the power supply and the load.

When the power supply is connected for remote sensing, the OVP circuit senses the voltage at the *sensing* points (load) and not the output terminals.

Connections between the power supply sensing and output terminals should be removed, and using shielded two-wire cable, the power supply sensing terminals should be connected to the load as shown in Figure 2-1. *Do not use the shield as one of the sensing conductors and the other end should be left unconnected.* Connect one end of the sensing lead shield to the chassis ground (⏚) only. Opening a sensing lead causes the power supply output voltage to decrease at the load leads. Observe polarity when connecting the sensing leads to the load.

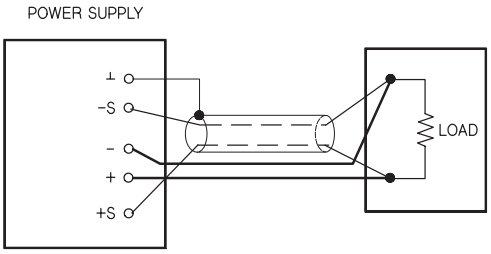

Figure 2-1. Remote Voltage Sensing Connections

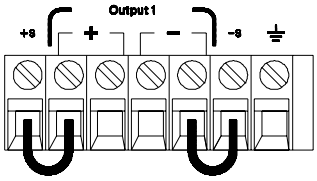

Figure 2-2. Local Sensing Connections

Stability

Using remote sensing under certain combinations of load lead lengths and large load capacitances may cause your application to form a filter, which becomes part of the voltage feedback loop. The extra phase shift created by this filter can degrade the power supply's stability, resulting in poor transient response or loop instability. In severe cases, it may cause oscillations. To minimize this possibility, keep the load leads as short as possible and twist them together. As the sense leads are part of the power supply's programming feedback loop, accidental open-connections of sense or load leads during remote sensing operation have various unwanted effects. Provide secure and permanent connections.

Note

During remote sensing setup, it is strongly recommended to power off (by presssing power ON/OFF button) the power supply to avoid undesirable damage to the load or the power supply.

CV Regulation

The voltage load regulation specification in chapter 8 applies at the output terminals of the power supply. When remote sensing, add 5 mV to this specification for each 1 V drop between the positive sensing point and (+) output terminal due to the change in load current. Because the sense leads are part of the power supply's feedback path, keep the resistance of the sense leads at or below 0.5 Ω per lead to maintain the above specified performance.

Output Rating

The rated output voltage and current specifications in chapter 8 apply at the output terminals of the power supply. With remote sensing, any voltage dropped in the load leads must be added to the load voltage to calculate maximum output voltage. The performance specifications are not guaranteed when the maximum output voltage is exceeded. If the excessive demand on the power supply forces the power supply to lose regulation, the **Unreg** annunciator will turn on to indicate that the output is unregulated.

Output Noise

Any noise picked up on the sense leads also appears at the output of the power supply and may adversely affect the voltage load regulation. Twist the sense leads to minimize external noise pickup and run them parallel and close to the load leads. In noisy environments it may be necessary to shield the sense leads. Ground the shield at the power supply end only. *Do not use the shield as one of the sense conductors.*

Multiple Loads

When connecting multiple loads to the power supply, each load should be connected to the output terminals using separate connecting wires. This minimizes mutual coupling effects between loads and takes full advantage of the low output impedance of the power supply. Each pair of wires should be as short as possible and twisted or bundled to reduce lead inductance and noise pick-up. If a shield is used, connect one end to the power supply ground terminal and leave the other end disconnected.

If cabling considerations require the use of distribution terminals that are located remotely from the power supply, connect output terminals to the distribution terminals by a pair of twisted or shielded wires. Connect each load to the distribution terminals separately.

3

Front-Panel Operation and Features

Front-Panel Operation and Features

So far you have learned how to install your power supply and do quick start. During the quick start, you were briefly introduced to operating from the front panel as you learned how to check basic voltage and current functions. This chapter describes in detail the use of the front-panel keys and shows how they are used to accomplish power supply operation.

This chapter is divided into the following sections:

- Front-Panel Operation Overview, on page 39
- Constant Voltage Operation, starting on page 40
- Constant Current Operation, starting on page 42
- Tracking Operation, starting on page 44
- View Menu Operation, starting on page 45
- Configuring the Remote Interface, starting on page 48
- Storing and Recalling Operating States, starting on page 50
- Programming Overvoltage Protection, starting on page 52
- Disabling the Output, on page 56
- System-Related Operations, starting on page 57
- GPIB Interface Reference, on page 60
- RS-232 Interface Reference, starting on page 61
- Calibration Overview, starting on page 64

Throughout this chapter the key to be pressed is shown in the left margin.

Note

See ''Error Messages'', starting on page 121 in chapter 5 if you encounter any errors during front-panel operation.

Front-Panel Operation Overview

The following section describes an overview of the front-panel keys before operating your power supply.

- The power supply is shipped from the factory configured in the front-panel operation mode. When in this mode, the front-panel keys can be used. At power-on, the power supply is automatically set to operate in the front-panel operation mode and the output1 is selected for front panel operation. Press [2] key for the output2 front panel operation.
- When the power supply is in remote operation mode, you can return to front-panel operation mode at any time by pressing the [Store / Local] (**Local**) key if you did not previously send the front-panel lockout command. A change between front-panel and remote operation modes will not result in a change in the output parameters.
- When you press [Display Limit] key (the **Limit** annunciator flashes), the display of the power supply goes to the *limit* mode and the present limit values will be displayed. In this mode, you can also observe the change of the limit values when adjusting the knob. If you press the [Display Limit] key again or let the display time-out after several seconds, the power supply will return the display to the *meter* mode (the **Limit** annunciator turns off). In this mode, the actual output voltage and current will be displayed.
- The output of the power supply can be enabled or disabled from the front panel by pressing [Output On/Off] key. When the output is off, the **OFF** annunciator turns on and the output is disabled.
- The display provides the present operating status of the power supply with annunciators and also informs the user of error codes. For example, the power supply is operating in CV mode in the 8V/3A range and controlled from the front panel, then the **CV** and **8V** annunciators will turn on. If, however, the power supply is remotely controlled, the **Rmt** annunciator will also turn on, and when the power supply is being addressed over GPIB interface, the **Adrs** annunciator will turn on. See "Display Annunciators", starting on page 5 for more information.
- The display provides the present operating status of the power supply with annunciators and also informs the user of error codes.

Constant Voltage Operation

To set up the power supply for constant voltage (CV) operation, proceed as follows.

- ***Front-panel operation:***

1 Connect a load to the output terminals.

With power-off, connect a load to the (+) and (-) output terminals.



2 Turn on the power supply.

The power supply will go into the *power-on / reset* state; the output is disabled (the **OFF** annunciator turns on); its low voltage range is selected (annunciator for the range presently selected turns on, for example, the **8V** annunciator turns on for the E3646A model); and the knob is selected for *voltage* control. At power-on, the output1 is selected and the **OUT1** annunciator turns on.

Press High to operate the power supply in the high voltage range before proceeding to the next step. The **20V** or **60V** annunciator turns on depending on which power supply you are using.



3 Set the display to the limit mode.

Notice that the **Limit** annunciator flashes, indicating that the display is in the *limit* mode. When the display is in the *limit* mode, you can see the voltage and current limit values of the power supply.

> *In **constant voltage** mode, the voltage values between the meter and limit modes are the same, but the current values are not. Moreover, if the display is in the meter mode, you cannot see the change of current limit value when adjusting the knob. We recommend that you should set the display to "limit" mode to see the change of current limit value in the constant voltage mode whenever adjusting the knob.*



4 Adjust the knob for the desired *current* limit.

Check that the **Limit** annunciator still flashes. Set the knob for *current* control. The flashing digit can be changed using the resolution selection keys and the flashing digit can be adjusted by turning the knob. Adjust the knob to the desired current limit.

[1]*You can use the resolution selection keys to move the flashing digit to the right or left when setting current.*



5 Adjust the knob for the desired output voltage.

Check that the **Limit** annunciator still flashes. Set the knob for *voltage* control. Change the flashing digit using the resolution selection keys and adjust the knob for the desired output voltage.



6 Return to the meter mode.

Press Display Limit or let the display time-out after several seconds to return to the meter mode. Notice that the **Limit** annunciator turns off and the display shows "OUTPUT OFF" message.



7 Enable the output.

The **OFF** annunciator turns off and the **CV** annunciator turns on. Notice that the display is in the *meter* mode.

8 Verify that the power supply is in the constant voltage mode.

If you operate the power supply in the constant voltage (CV) mode, verify that the **CV** annunciator is lit. If the **CC** annunciator is lit, choose a higher current limit.

Note

During actual CV operation, if a load change causes the current limit to be exceeded, the power supply will automatically crossover to the constant current mode at the preset current limit and the output voltage will drop proportionately.

- ***Remote interface operation:***

`CURRent {<current>|MIN|MAX}`	*Set the current*
`VOLTage {<voltage>|MIN|MAX}`	*Set the voltage*
`OUTPut ON`	*Enable the output*

[1] *You can use the resolution selection keys to move the flashing digit to the right or left when setting voltage.*

Constant Current Operation

To set up the power supply for constant current (CC) operation, proceed as follows.

- ***Front-panel operation:***

1 Connect a load to the output terminals.

With power-off, connect a load to the (+) and (-) output terminals.



2 Turn on the power supply.

The power supply will go into the *power-on / reset* state; the output is disabled (the **OFF** annunciator turns on); its low voltage range is selected (annunciator for the range presently selected turns on, for example, the **8V** annunciator turns on for the E3646A model); and the knob is selected for *voltage* control. At power-on, the output1 is selected and the **OUT1** annunciator turns on.

Press High to operate the power supply in the high voltage range before proceeding to the next step. The **20V** or **60V** annunciator turns on depending on which power supply you are using.



3 Set the display to the limit mode.

Notice that the **Limit** annunciator flashes, indicating that the display is in the *limit* mode. When the display is in the *limit* mode, you can see the voltage and current limit values of the selected supply.

> *In **constant current** mode, the current values between the meter mode and limit mode are the same, but the voltage values are not. Moreover, if the display is in the meter mode, you cannot see the change of voltage limit value when adjusting the knob. We recommend that you should set the display to "limit" mode to see the change of voltage limit value in the constant current mode whenever adjusting the knob.*



4 Adjust the knob for the desired *voltage* limit.

Check that the **Limit** annunciator still flashes and the knob is selected for *voltage* control. The flashing digit can be changed using the resolution keys and the flashing digit can be adjusted by turning the knob. Adjust the knob for the desired voltage limit.

[1]*You can use the resolution selection keys to move the flashing digit to the right or left when setting the voltage.*



5 Adjust the knob for the desired output current.

Check that the **Limit** annunciator still flashes. Set the knob for *current* control. Change the flashing digit using the resolution selection keys and adjust the knob to the desired output current.



6 Return to the meter mode.

Press Display Limit or let the display time-out after several seconds to return to the meter mode. Notice that the **Limit** annunciator turns off and the display shows "OUTPUT OFF" message.



7 Enable the output.

The **OFF** annunciator turns off and the **CC** annunciator turns on. Notice that the display is in the *meter* mode.

8 Verify that the power supply is in the constant current mode.

If you operate the power supply in the constant current (CC) mode, verify that the **CC** annunciator is lit. If the **CV** annunciator is lit, choose a higher voltage limit.

Note

During actual CC operation, if a load change causes the voltage limit to be exceeded, the power supply will automatically crossover to constant voltage mode at the preset voltage limit and the output current will drop proportionately.

- ***Remote interface operation:***

`VOLTage {<voltage>|MIN|MAX}`	*Set the voltage*
`CURRent {<current>|MIN|MAX}`	*Set the current*
`OUTPut ON`	*Enable the output*

[1] *You can use the resolution selection keys to move the flashing digit to the right or left when setting the current.*

Tracking Operation

This power supply provides tracking outputs. In the track mode, two voltages of the output1 and the output2 supplies track each other within the voltage programming accuracy as described on page 159 in chapter 8 for convenience in varying the symmetrical voltages needed by operational amplifiers and other circuits using balanced two outputs. The track mode is always off state when power has been off or after a remote interface reset.

- ***Front-panel operation:***

1 Set either the output1 or the output2 supply to the desired voltage.

Track

2 Enable the track mode.

hold_key

Hold down Track key until the **Track** annunciator turns on. For example, when the track mode is first enabled with the output1 selected, the output2 supply will be set to the same voltage level as the output1 supply. Once enabled, any change of the voltage level in either the output1 or the output2 supply will be reflected in other supply. The current limit is independently set for each of the output1 or the output2 supply and is not affected by the track mode.

Track

3 Exit the track mode.

The **Track** annunciator turns off.

Note

The tracking accuracy is dependent upon the voltage programming accuracy of each output. See ''Performance Specifications'' for more information starting on page 159 in chapter 8.

- ***Remote interface operation:***

`OUTPut:TRACk[:STATe]{OFF|ON}`	*Disable/enable the track mode*
`OUTPut:TRACk[:STATe]?`	*Queries the track mode status*

View Menu Operation

From the *View* menu, you can read the Errors, Firmware Revision, and Calibration String. In addition, you can change the front-panel display mode to V-V display, I-I display, or V-I display as desired. With this V-V or I-I display mode setting, you can see voltages or currents on the output1 and the output2, simultaneously.

- After the display mode is set to V-V or I-I display mode, you can't change the limit values. If you attempt to change the limit values by turning the knob or pressing one of the following keys: <, Voltage Current, >, Low, or High, the front panel display will automatically return to the normal display to allow you to change the limit values.
- After the display mode is set to V-V or I-I display mode, all the annunciators remain unchanged.
- To exit the *view* menu without any changes, press View key until NO CHANGE is displayed, or select EXIT by turning the knob and press View key.

Changing Display Mode

View

1 Enter the View Menu.

display

If ERRORS appears when you enter the view menu, one or more command syntax or hardware errors have been detected. Then turn the knob until DISPLAY is displayed.

View 

2 Select the display mode you want to display.

v-I display

Select one of the following display modes by turning the knob: V-V DISPLAY, I-I DISPLAY, or V-I DISPLAY.

View

3 Save the change and exit the menu.

Viewing the Errors



1 Press View key twice to view the errors.

```
1: err -103
```

Total number of the errors detected will be displayed shortly before the above message is displayed. The above number "1" stands for the first error in queue and the "-103" is error code.



2 Scroll through the error numbers and view the text of the error message by using the knob and > key.

Press > key to increase the scrolling speed of the text on the display.



3 Clear the errors and exit the menu.

All errors are cleared when you exit the menu by pressing View key or let the display time out for about 30 seconds.

See "Error Messages" for more information starting on page 121 in chapter 5.

Viewing the Firmware Revision

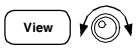

1 Enter the View menu and select FW REVISION.

```
FW REvision
```



2 View the firmware revision of your power supply.

```
REV X.X-Y.Y-Z.Z
```

The first number is the firmware revision number for the main processor; the second is for the input/output processor; and the third is for the front-panel processor. See "*Firmware Revision Query*" on page 59 for more information.

Viewing the Calibration String

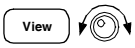

1 Enter the View menu and select CAL STRING.

cal string



2 Scroll through the text of the message.

cal12-24-99

NO STRING is displayed if no calibration message is stored. Press (>) to increase the scrolling speed.The Cal String can't be changed from the front panel. See "*Calibration Message*" on page 68 for more information.

Configuring the Remote Interface

This power supply is shipped with both a GPIB (IEEE-4888) interface and an RS-232 interface. The GPIB interface is selected when the power supply is shipped from the factory. Only one interface can be enabled at a time. To exit the I/O configuration mode without any changes, press I/O Config key until the "NO CHANGE" message is displayed.

- You can set the GPIB address, parity, and baud rate from the front panel *only*.
- The current selection is highlighted for emphasis. All other choices are dimmed.
- The interface selection is stored in *non-volatile* memory, and does not change when power has been off or after a power-on reset (`*RST` command).

GPIB Configuration

I/O Config

1 Turn on the remote configuration mode.

GPIB / 488

If "RS-232" appears, select "GPIB / 488" by turning the knob.

I/O Config 

2 Select the GPIB address.

ADDR 05

You can set the power supply's address to any value between 0 and 30. The *factory setting* is address "5".

I/O Config

3 Save the change and exit the menu.

SAVED

Note

Your computer's GPIB interface card has its own address. Be sure to avoid using the computer's address for any instrument on the interface bus. Agilent Technologies GPIB interface cards generally use address "21".

RS-232 Configuration

I/O Config

1 Turn on the remote configuration mode.

GPIB / 488

Notice that if you changed the remote interface selection to RS-232 before, "RS-232" *message is displayed.*



2 Choose the RS-232 interface.

RS-232

You can choose the RS-232 interface by turning the knob.

I/O Config 

3 Select the baud rate

Select one of the following: 300, 600, 1200, 2400, 4800, or 9600 (*factory setting*) baud.

9600 BAUD

I/O Config 

4 Select the parity and number of stop bits.

Select one of the following: None (8 data bits, *factory setting*), Odd (7 data bits), or Even (7 data bits). When you set the parity, you are also indirectly setting the number of the data bits.

NONE 8 BITS

I/O Config

5 Save the change and exit the menu.

SAVED

Storing and Recalling Operating States

You can store up to five different operating state in *non-volatile* storage locations. When shipped from the factory, storage locations "1" through "5" are empty. You can name a location from the front panel or over the remote interface but you can only recall a named state from the front panel.

The following steps show you how to store and recall an operating state.

To cancel the store/recall operation, select the "**EXIT**" menu by turning the knob then press the key pressed or let the display time-out.

- ***Front-panel operation:***

Storing Operating State

1 Set up the power supply for the desired operating state.

The storage feature "remembers" output voltage range selection, the limit value settings of voltage and current, output on/off state, OVP on/off state, and OVP trip levels.

Store

2 Turn on the storage mode.

STORE STATE

From the front panel, you can assign names (up to 10 characters) to each of the five stored states. Turn the knob until the "NAME STATE" appears and press Store to select the locations, then press Store to name the locations.

Name STATE

1:p15v_test

Store 

3 Select the storage location.

Turn the knob to the right to specify the memory location 2.

2: STatE2

Store

4 Save the operating state

DONE

Recalling a Stored State

Recall

1 Turn on the recall mode.

Memory location "1" will be displayed in the recall mode.

1: p15v_test

2 Select the stored operating state.

2: state2

reset

You can select the above **RESET** mode to reset the power supply to the power-on state without turning power off/on or without using "`*RST`" command over the remote interface. See page 92 for more details on "`*RST`" command.

Recall

3 Recall the stored operating state.

done

- ***Remote interface operation:***

Use the following commands to store and recall power supply state.

`*SAV {1|2|3|4|5}`	*Store an operating state to a specified location*
`*RCL {1|2|3|4|5}`	*Recall a previously stored state from a specified location*
"`MEM:STATE:NAME 1, 'P15V_TEST'`"	*Name the storage location 1 as "P15V_TEST".*

Programming Overvoltage Protection

Overvoltage protection guards the load against output voltages reaching values greater than the programmed protection level. It is accomplished by shorting the output via an internal SCR when the trip level is set to equal or greater than 3 volts, or by programming the output to 1 volt when the trip level is set to less than 3 volts.

The following steps show how to set the OVP trip level, how to check OVP operation, and how to clear overvoltage condition.

- ***Front-panel operation:***

Setting the OVP Level and Enable the OVP Circuit

Power

1 Turn on the power supply.

1 or 2

2 Select the output to be programmed.

Over Voltage

3 Enter the OVP menu and set the desired trip level.

```
LEVEL 22.0V (E3646A)
```

Use the knob and the resolution selection key < or > to set the desired trip level. *Note* that you cannot set the trip levels to lower than 1.0 volt.

Over Voltage

4 Enable the OVP circuit.

```
OVP ON
```

Over Voltage

5 Exit the OVP menu.

```
CHANGED
```

If the OVP settings are not changed, "NO CHANGE" will be displayed. The power supply will exit the OVP menu and the display will return to the meter mode. Check that the **OVP1** and **OVP2** annunciators turn on if the OVP circuit is enabled.

Checking OVP Operation

To check OVP operation, raise the output voltage to near the trip point. Then very gradually increase the output by turning the knob until the OVP circuit trips. This will cause the power supply output to drop to near zero, the **OVP1** or **OVP2** annunciator to flash depending on the output operated, and the **CC** annunciator to turn on. The "OVP1 (or OVP2) TRIP" message also appears on the display.

Clearing the Overvoltage Condition

When the OVP condition occurs, the **OVP1** or **OVP2** annunciator flashes. When it was caused by an external voltage source such as a battery, disconnect it first. Clear the overvoltage condition by adjusting output voltage level or by adjusting OVP trip level.

The following steps show you how to clear the overvoltage condition and get back to normal mode operation. In the following steps, the display will go back to "OVP1 (or OVP2) TRIP" if you let the display time out after about several seconds.

By Adjusting output voltage level



1 Lower the output voltage level below the OVP trip point.

The **OVP** and **Limit** annunciators are flashing after Display Limit key is pressed.



2 Check that you lowered the voltage level below the OVP trip point.

The OVP trip point is displayed. Do not adjust the trip point at this step.

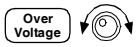

3 Select the OVP CLEAR mode by turning the knob.

OVP ON

OVP CLEAR

Over Voltage

4 Clear the overvoltage condition and exit this menu.

done

The annunciator for OVP operation will not flash any more. The output will return to meter mode.

By Adjusting OVP trip level

Over Voltage

1 Raise the OVP trip level higher than the level tripped.

Over Voltage

2 Select the OVP CLEAR mode by turning the knob.

OVP ON

OVP CLEAR

Over Voltage

3 Clear the overvoltage condition and exit this menu.

done

The annunciator for OVP operation will not flash any more. The output will return to the meter mode.

- ***Remote interface operation:***

`VOLT:PROT {<voltage>|MIN|MAX}`	*Set the OVP level*
`VOLT:PROT:STAT {OFF|ON)`	*Disable or enable the OVP circuit*
`VOLT:PROT:CLE`	*Clear the tripped OVP circuit*

N o t e

The power supply's OVP circuit contains a crowbar SCR, which effectively shorts the output of the power supply whenever the overvoltage condition occurs. If external voltage source such as a battery is connected across the output, and the overvoltage condition inadvertently occurs, the SCR will continuously sink a large current from the source; possibly damaging the power supply. To avoid this a diode must be connected in series with the output as shown in Figure 3-1.

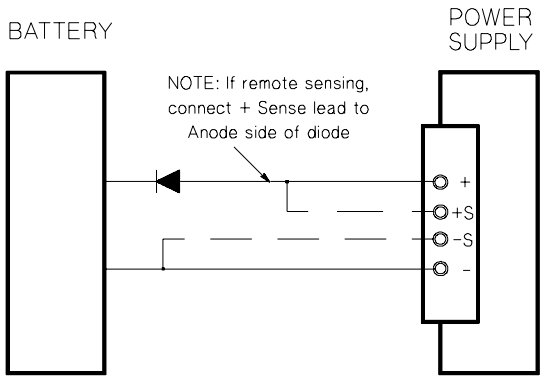

Figure 3-1. Recommended Protection Circuit for Battery Charging

Disabling the Output

The output of the power supply can be disabled or enabled from the front panel.

- When the power supply is in the "Off" state, the **OFF** annunciator turns on and the output is disabled. The **OFF** annunciator turns off when the power supply returns to the "On" state. When the output is disabled, the voltage value is 0 volts and the current value is 0.02 amps. This gives a zero output voltage without actually disconnecting the output.
- The output state is stored in *volatile* memory; the output is always disabled when power has been off or after a remote interface reset.
- While the output is disabled, the control *knob* is locked to prevent from any unwanted changes occurring. But the other front panel keys are working.
- To lock the control knob, move the flashing digit to the right or left using (<) or (>) resolution selection keys until the flashing digit disappears.

To see or check the changes while the output is disabled, press (Display Limit) before returning to meter mode.

- ***Front-panel operation:***

  (Output On/Off) output Off

- ***Remote interface operation:***

  `OUTP {OFF|ON}`

Disconnecting the Output Using an External Relay

To disconnect the output, an external relay must be connected between the output and the load. A TTL signal of either low true or high true is provided to control an external relay. This signal can only be controlled with the remote command `OUTPut:RELay {OFF|ON}`. The TTL output is available on the RS-232 connection pin 1 and pin 0.

When the `OUTPut:RELay` state is "ON", the TTL output of pin 1 is high (4.5 V) and pin 9 is low (0.5 V). The levels are reversed when the `OUTPut:RELay` state is "OFF". The TTL output of pin 1 or pin 9 of the RS-232 connector is available only after installing two jumpers (JP1 and JP2) inside the power supply. See the *Service Information* to locate them.

Note

Do not use the RS-232 interface if you have configured the power supply to output relay control signals. Internal components on the RS-232 circuitry may be damaged.

System-Related Operations

This section gives information on system-related topics such as storing power supply states, reading errors, running a self-test, displaying messages on the front panel, and reading firmware revisions.

State Storage

The power supply has five storage locations in non-volatile memory to store power supply states. The locations are numbered 1 through 5. You can assign a name to each of the locations for use from the front panel.

- You can store the power supply state in any of the five locations. However, you can only recall a state from a location that contains a previously stored state.
- The power supply stores the following: the state of output range selection, flashing digit position on the display, the limit value settings of voltage and current, output on/off state, OVP on/off state and trip levels.
- When shipped from the factory, storage locations "1" through "5" are empty.
- You can assign a name to the storage locations. You can name a location from the front panel or over the remote interface but you can only recall a named state from the front panel. From the remote interface, you can only recall a stored state using a number (1 through 5).
- The name can contain up to 9 characters. A letter (A-Z) or numbers (0-9) can be used for the first character to name a state. The underscore character ("_ ") can be used for the remaining 8 characters. Blank spaces are not allowed. An error is generated if you specify a name with more than 10 characters.
- A *power-on* reset (`*RST` command) does not affect the configurations stored in memory. Once a state is stored, it remains until it is overwritten.
- ***Front-Panel Operation:***

  Store — STORE STATE, NAME STATE, EXIT

  To reset the power supply to the power-on reset state without using the `*RST` command or turning power off/on, select the "RESET" from the following.

  Recall — 5 states, RESET, exit

- ***Remote Interface Operation:***

  Use the following commands to store and recall power supply state.

  `*SAV {1|2|3|4|5}`

  `*RCL {1|2|3|4|5}`

  To assign a name to a stored state to be recalled from the front panel, send the following command. From the remote interface, you can only recall a stored state using a number (1 through 5).

  "`MEM:STATE:NAME 1, 'P15V_TEST'`"

Self-Test

A *power-on* self-test occurs automatically when you turn on the power supply. This test assures you that the power supply is operational. This test does not perform the extensive set of tests that are included as part of the complete self-test described below. If the power-on self-test fails, the **ERROR** annunciator turns on.

A *complete* self-test performs a series of tests and takes approximately 2 seconds to execute. If all tests pass, you can have a high confidence that the power supply is operational.

If the *complete* self-test is successful, "PASS" is displayed on the front panel. If the self-test fails, "FAIL" is displayed and the **ERROR** annunciator turns on. See the *Service Information* for instructions on returning the power supply to Agilent Technologies for service.

- ***Front-panel operation:***

  To perform the complete front panel *self-test*, hold down the Display Limit key as you turn on the power supply and *hold down the key until you hear a long beep*. The self-test will begin when you release the key following the beep.

- ***Remote interface operation:***

  "`*TST?`"

  Returns "0" if the complete self-test passes or "1" if it fails.

Error Conditions

When the front-panel **ERROR** annunciator turns on, one or more command syntax or hardware errors have been detected. A record of up to 20 errors can be stored in the power supply's *error queue*. See "Error Messages" for more information starting on page 121 in chapter 5.

Firmware Revision Query

The power supply has three microprocessors for control of various internal systems. You can query the power supply to determine which revision of firmware is installed for each microprocessor.

- The power supply returns three revision numbers. The first number is the firmware revision number for the main processor; the second is for the input/output processor; and the third is for the front-panel processor.
- ***Front-Panel Operation:***

  View  View REV X.X-Y.Y-Z.Z

  Press View and turn the knob until FW REVISION appears and then press View to read the system firmware revision numbers.
- ***Remote interface operation:***

  `*IDN?`

  The above command returns a string in the form:

  "`Agilent Technologies,E3646A,0,X.X-Y.Y-Z.Z`" *(E3646A)*

  Be sure to dimension a string variable with at least 40 characters.

SCPI Language Version

This power supply complies with the rules and regulations of the present version of SCPI (*Standard Commands for Programmable Instruments*). You can determine the SCPI version with which the power supply is in compliance by sending a command from the remote interface.

You can query the SCPI version from the remote interface only.

- ***Remote interface operation:***

  "`SYST:VERS?`" *Query the SCPI version*

  Returns a string in the form "YYYY.V" where the "Y's" represent the year of the version, and the "V" represents a version number for that year (for example, 1997.0).

GPIB Interface Reference

The GPIB connector on the rear panel connects your power supply to the computer and other GPIB devices. Chapter 2 lists the cables that are available from Agilent Technologies. A GPIB system can be connected together in any configuration (star, linear, or both) as long as the following rules are observed:

Each device on the GPIB (IEEE-488) interface must have a unique address. You can set the power supply's address to any value between 0 and 30. The address is set to "5" when the power supply is shipped from the factory. The GPIB address is displayed at power-on.

You can set the GPIB address from the front panel only.

- The address is stored in *non-volatile* memory, and *does not* change when power has been off or after a power-on reset (`*RST` command).
- Your computer's GPIB interface card has its own address. Be sure to avoid using the computer's address for any instrument on the interface bus. Agilent Technologies GPIB interface cards generally use address "21".
- The total number of devices including the computer is no more than 15.
- The total length of all the cables used is no more than 2 meter times the number of devices connected together, up to a maximum of 20 meters.
- Do not stack more than three connector blocks together on any GPIB connector. Make sure that all connectors are fully seated and that the lock screws are firmly finger tightened.

See page 48 for more information on configuring the power supply for remote interface from the front panel.

Note

IEEE-488 states that you should exercise caution if your individual cable lengths exceed 4 meters.

RS-232 Interface Reference

The power supply can be connected to the RS-232 interface using the 9-pin (DB-9) serial connector on the rear panel. The power supply is configured as a DTE (Data Terminal Equipment) device. For all communications over the RS-232 interface, the power supply uses two handshake lines: DTR (Data Terminal Ready, on pin 4) and DSR (Data Set Ready, on pin 6).

The following sections contain information to help you use the power supply over the RS-232 interface. The programming commands for RS-232 are explained on page 97.

RS-232 Configuration Overview

Configure the RS-232 interface using the parameters shown below. Use the front-panel I/O Config key to select the baud rate, parity, and number of data bits (*See page 48 for more information*).

- Baud Rate: 300, 600, 1200, 2400, 4800, or **9600** (*factory setting*)
- Parity and Data Bits: **None / 8 data bits** (*factory setting*)
  Even / 7 data bits, or
  Odd / 7 data bits
- Number of Start Bits: **1 bit** (*fixed*)
- Number of Stop Bits: **2 bits** (*fixed*)

RS-232 Data Frame Format

A character *frame* consists of all the transmitted bits that make up a single character. The frame is defined as the characters from the *start bit* to the last *stop bit*, inclusively. Within the frame, you can select the baud rate, number of data bits, and parity type. The power supply uses the following frame formats for seven and eight data bits.

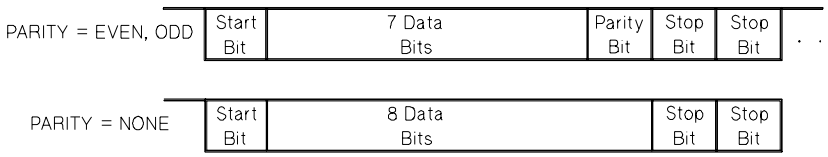

Connection to a Computer or Terminal

To connect the power supply to a computer or terminal, you must have the proper interface cable. Most computers and terminals are DTE (*Data Terminal Equipment*) devices. Since the power supply is also a DTE device, you must use a DTE-to-DTE interface cable. These cables are also called null-modem, modem-eliminator, or crossover cables.

The interface cable must also have the proper connector on each end and the internal wiring must be correct. Connectors typically have 9 pins (DB-9 connector) or 25 pins (DB-25 connector) with a "male" or "female" pin configuration. A male connector has pins inside the connector shell and a female connector has holes inside the connector shell.

If you cannot find the correct cable for your configuration, you may have to use a *wiring adapter*. If you are using a DTE-to-DTE cable, make sure the adapter is a "*straight-through*" type. Typical adapters include gender changers, null-modem adapters, and DB-9 to DB-25 adapters.

The cable and adapter diagrams shown below can be used to connect the power supply to most computers or terminals. If your configuration is different than those described, order the Agilent 34399A Adapter Kit. This kit contains adapters for connection to other computers, terminals, and modems. Instructions and pin diagrams are included with the adapter kit.

DB-9 Serial Connection *If your computer or terminal has a 9-pin serial port with a male connector, use the null-modem cable included with the Agilent 34398A Cable Kit. This cable has a 9-pin female connector on each end. The cable pin diagram is shown below.*

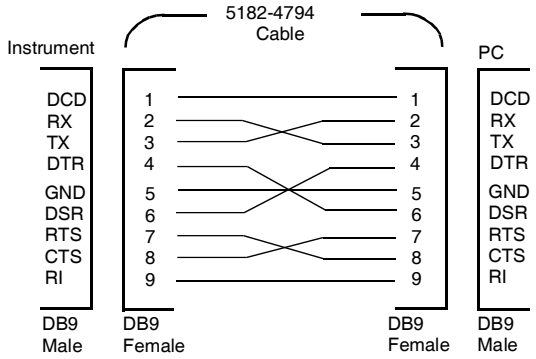

DB-25 Serial Connection *If your computer or terminal has a 25-pin serial port with a male connector, use the null-modem cable and 25-pin adapter included with the Agilent 34398A Cable Kit. The cable and adapter pin diagram are shown below.*

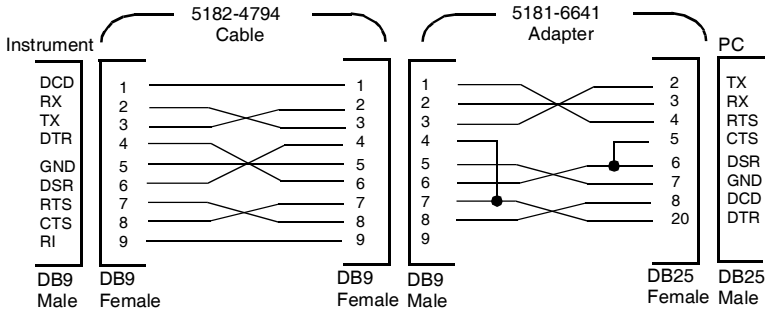

RS-232 Troubleshooting

Here are a few things to check if you are having problems communicating over the RS-232 interface. If you need additional help, refer to the documentation that came with your computer.

- Verify that the power supply and your computer are configured for the same baud rate, parity, and number of data bits. Make sure that your computer is set up for 1 start bit and 2 stop bits (these values are fixed on the power supply).
- Make sure to execute the `SYSTem:REMote` command to place the power supply in the remote mode.
- Verify that you have connected the correct interface cable and adapters. Even if the cable has the proper connectors for your system, the internal wiring may be incorrect. The *Agilent 34398A Cable Kit* can be used to connect the power supply to most computers or terminals.
- Verify that you have connected the interface cable to the correct serial port on your computer (COM1, COM2, etc.).

Calibration Overview

This section gives an overview of the calibration features of the power supply. For more detailed discussion of the calibration procedures, see the *Service Information*.

Calibration Security

This feature allows you to enter a security code to prevent accidental or unauthorized calibrations of the power supply. When you first receive your power supply, it is secured. Before you can calibrate the power supply, you must unsecure it by entering the correct security code.

- The table 3-1 below shows the security code for each model when the power supply is shipped from the factory. The security code is stored in *non-volatile* memory, and does not change when power has been off or after a power-on reset (`*RST` command).
- The security code may contain up to 11 alphanumeric characters or underscore character ("_"). A letter (A-Z) or number (0-9) can be used for the first character. You do not have to use all 11 characters.

  _ _ _ _ _ _ _ _ _ _ _ (11 characters)

- When you secure the power supply from the remote interface, use maximum 8 alphanumeric characters to unsecure the power supply from the front panel also. For example,

  e3646A (less than 9 characters)

If you forget your security code, you can disable the security feature by adding a jumper inside the power supply, and then entering a new code. See the Service Information for more information.

Table 3-1. Factory setting security codes

Model	Security Code	Model	Security Code
E3646A	003646	E3647A	003647
E3648A	003648	E3649A	003649

To Unsecure for Calibration

You can unsecure the power supply either from the front panel or over the remote interface. The power supply is secured when shipped from the factory. See the table 3-1 for the factory setting secure code for your power supply.

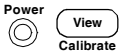

1 Select the calibration mode.

SECURED

If the power supply is secured, the above message is displayed as you turn on the power supply by holding down View Calibrate (**Calibrate**) key and hold down the key *until you hear a long beep.* And a message "CAL MODE" is displayed.



2 Enter the security code.

000000

Enter the security code using the control knob and resolution selection keys.

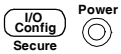

3 Save the change and exit the menu.

UNSECURED

You will see the above message if the security code is correct. And a message "CAL MODE" is displayed. To exit the calibration mode, turn the power off and on.

Notice that if you enter the wrong secure code, "INVALID" is displayed and the code entering mode is displayed for you to enter the correct code.

- ***Remote Interface Operation:***

  `CAL:SEC:STAT {OFF|ON},<code>` *Secure or unsecure the power supply*

  To unsecure the power supply, send the above command with the same code used to secure. For example,

  "`CAL:SEC:STAT OFF, '003646'`" *(E3646A model)*

To Secure Against Calibration

You can secure the power supply against calibration either from the front panel or over the remote interface. The power supply is secured when shipped from the factory.

Be sure to read the security code rules on page 64 before attempting to secure the power supply.

- ***Front-Panel Operation:***

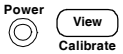

1 Select the calibration mode.

```
UNSECURED
```

If the power supply is unsecured, the above message is displayed as you turn on the power supply by holding down View (**Calibrate**) key and hold down the key *until you hear a long beep.* And a message "CAL MODE" is displayed.



2 Enter the security code.

```
000000
```

Enter the desired security code using the control knob and resolution selection keys.

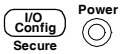

3 Save the change and exit the menu.

```
secured
```

The secured setting is stored in *non-volatile* memory, and does not change when power has been off or after a power-on reset (`*RST` command).

- ***Remote Interface Operation:***

  `CAL:SEC:STAT {OFF|ON},<code>` *Secure or unsecure the power supply*

  To secure the power supply, send the above command with the same code as used to unsecure. For example,

  "`CAL:SEC:STAT ON, '003646'`" *(E3646A model)*

To Change the Security Code To change the security code, you must first unsecure the power supply, and then enter a new code. Be sure to read the security code rules on page 64 before attempting to secure the power supply.

- ***Front-Panel Operation:***

To change the security code, first make sure that the power supply is unsecured. Go to the security code entry, press I/O Config Secure (**Secure**) key after the "CAL MODE" message is displayed, enter the new security code using the control knob and resolution selection keys, then press I/O Config Secure (**Secure**) key.

Changing the code from the front panel also changes the code as seen from the remote interface.

- ***Remote Interface Operation:***

`CAL:SEC:CODE <new code>`	*Change the security code*

To change the security code, first unsecure the power supply using the old security code. Then, enter the new code as shown below.

"`CAL:SEC:STAT OFF, '003646'`"	*Unsecure with old code*
"`CAL:SEC:CODE 'ZZ001443'`"	*Enter new code*
"`CAL:SEC:STAT ON, 'ZZ001443'`"	*Secure with new code*

Calibration Count

You can determine the number of times that your power supply has been calibrated. Your power supply was calibrated before it left the factory. When you receive your power supply, read the count to determine its initial value.

The calibration count feature can be performed from the remote interface only.

- The calibration count is stored in *non-volatile* memory, and does not change when power has been off or after a remote interface reset.
- The calibration count increments up to a maximum of 32,767 after which it wraps-around to 0. Since the value increments by one for each calibration point, a complete calibration will increase the value by 6 counts.
- ***Remote Interface Operation:***

`CAL:COUN?`	*Query the number of times of calibration*

Calibration Message

The power supply allows you to store one message in calibration memory in the mainframe. For example, you can store such information as the date when the last calibration was performed, the date when the next calibration is due, the power supply's serial number, or even the name and phone number of the person to contact for a new calibration.

- You can record a calibration message *only* from the remote interface and *only* when the power supply is unsecured. You can read the message from either the front-panel or over the remote interface. You can read the calibration message whether the powers supply is secured or unsecured.
- The calibration message may contain up to 40 characters. From the front panel, you can view 11 characters of the message at a time.
- Storing a calibration message will overwrite any message previously stored in memory.
- The calibration message is stored in *non-volatile* memory, and does not change when power has been off or after a remote interface reset.
- ***Front-Panel Operation:***

  To read calibration message from the front panel, press View and turn the knob until "CAL STRING" is displayed. Press View to scroll through the text of the message. Press > to increase the scrolling speed.

  

  CAL STRING

- ***Remote Interface Operation:***

  To store the calibration message, send the following command.

  "`CAL:STR 'CAL 12-05-99"'`

4

Remote Interface Reference

Remote Interface Reference

- SCPI Command Summary, starting on page 71
- Simplified Programming Overview, starting on page 77
- Using the APPLy Command, on page 80
- Output Setting and Operation Commands, starting on page 81
- Triggering, starting on page 87
- System-Related Commands, starting on page 90
- State Storage Commands, on page 93
- Calibration Commands, starting on page 94
- Interface Configuration Commands, on page 97
- The SCPI Status Registers, starting on page 98
- Status Reporting Commands, starting on page 108
- An Introduction to the SCPI Language, starting on page 111
- Halting an Output in Progress, on page 116
- SCPI Conformance Information, starting on page 117
- IEEE-488 Conformance Information, on page 120

If you are a first-time user of the SCPI language, you may want to refer to these sections to become familiar with the language before attempting to program the power supply.

SCPI Command Summary

This section summarizes the SCPI (*Standard Commands for Programmable Instruments*) commands available to program the power supply over the remote interface. Refer to the later sections in this chapter for more complete details on each command.

Throughout this manual, the following conventions are used for SCPI command syntax.

- Square brackets ([ ]) indicate optional keywords or parameters.
- Braces ({ }) enclose parameters within a command string.
- Triangle brackets (< >) indicate that you must substitute a value or a code for the enclosed parameter.
- A vertical bar (|) separates one of two or more alternative parameters.



First-time SCPI users, see page 111.

Output Setting and Measurement Commands

(*see page 81 for more information*)

```
APPLy {<voltage>|DEF|MIN|MAX}[,{<current>|DEF|MIN|MAX}]
APPLy?
[SOURce:]
   CURRent[:LEVel][:IMMediate][:AMPLitude]{<current>|MIN|MAX|UP|DOWN}
   CURRent[:LEVel][:IMMediate][:AMPLitude]? [MIN|MAX]
   CURRent[:LEVel][:IMMediate]:STEP[:INCRement]
     {<numeric value> |DEFault}
   CURRent[:LEVel][:IMMediate]:STEP[:INCRement]? [DEFault]
   CURRent[:LEVel]:TRIGgered[:AMPLitude] {<current>|MIN|MAX}
   CURRent[:LEVel]:TRIGgered[:AMPLitude]? [MIN|MAX]
   VOLTage[:LEVel][:IMMediate][:AMPLitude]
     {<voltage>|MIN|MAX|UP|DOWN}
   VOLTage[:LEVel][:IMMediate][:AMPLitude]? [MIN|MAX]
   VOLTage[:LEVel][:IMMediate]:STEP[:INCRement]
     {<numeric value>|DEFault}
   VOLTage[:LEVel][:IMMediate]:STEP[:INCRement]? [DEFault]
   VOLTage[:LEVel]:TRIGgered[:AMPLitude] {<voltage>|MIN|MAX}
   VOLTage[:LEVel]:TRIGgered[:AMPLitude]? [MIN|MAX]
   VOLTage:PROTection[:LEVel] {<voltage>|MIN|MAX}
   VOLTage:PROTection[:LEVel]? [MIN|MAX]
   VOLTage:PROTection:STATe {0|1|OFF|ON}
   VOLTage:PROTection:STATe?
   VOLTage:PROTection:TRIPped?
   VOLTage:PROTection:CLEar
   VOLTage:RANGe {P8V*|P20V*|P35V**|P60V**|LOW|HIGH}
   VOLTage:RANGe?
INSTrument[:SELect]{OUTPut1|OUTPut2|OUT1|OUT2}
   [:SELect]?
   :NSELect {1|2}
   :NSELect?
   :COUPle
     [:TRIGger] {ON|OFF}
     [:TRIGger]?
MEASure
  [:SCALar]
     :CURRent[:DC]?
     [:VOLTage][:DC]?
OUTPut:TRACk[:STATe]{ON|OFF}
  :TRACk[:STATe]?
```

*For E3646A/48 Models **For E3647A/49A Models

Triggering Commands

(*see page 87 for more information*)

```
INITiate[:IMMediate]
TRIGger[:SEQuence]
  :DELay {<seconds>|MIN|MAX}
  :DELay?[MIN|MAX]
  :SOURce {BUS|IMM}
  :SOURce?
*TRG
```

System-Related Commands

(*see page 90 for more information*)

```
DISPlay[:WINDow]
  [:STATe] {OFF|ON}
  [:STATe]?
  :MODE{VV|VI|II}
  :MODE?
  :TEXT[:DATA] <quoted string>
  :TEXT[:DATA]?
  :TEXT:CLEar
SYSTem
  :BEEPer[:IMMediate]
  :ERRor?
  :VERSion?

OUTPut
  :RELay[:STATe] {OFF|ON}
  :RELay[:STATe]?
  [:STATe] {OFF|ON}
  [:STATe]?

*IDN?
*RST
*TST?
```

Calibration Commands

(*see page 94 for more information*)

```
CALibration
  :COUNt?
  :CURRent[:DATA] <numeric value>
  :CURRent:LEVel {MIN|MID|MAX}
  :SECure:CODE <new code>
  :SECure:STATe {OFF|ON},<quoted  code>
  :SECure:STATe?
  :STRing <quoted string>
  :STRing?
  :VOLTage[:DATA] <numeric value>
  :VOLTage:LEVel {MIN|MID|MAX}
  :VOLTage:PROTection
```

Interface Configuration Commands

(*see page 97 for more information*)

```
SYSTem
  :INTerface {GPIB|RS232}
  :LOCal
  :REMote
  :RWLock
```

State Storage Commands

(*see page 93 for more information*)

```
*SAV {1|2|3|4|5}
*RCL {1|2|3|4|5}
MEMory:STATe
  :NAME {1|2|3|4|5} ,<quoted name>
  :NAME? {1|2|3|4|5}
```

Status Reporting Commands

(*see page 108 for more information*)

```
STATus:QUEStionable
    [:EVENt]?
    :ENABle <enable value>
    :ENABle?
    :INSTrument
      [:EVENt]?
      :ENABle <enable value>
      :ENABle?
      :ISUMmary<n>
        [:EVENt]?
        :CONDition?
        :ENABle <enable value>
        :ENABle?

SYSTem:ERRor?
*CLS
*ESE <enable value>
*ESE?
*ESR?
*OPC
*OPC?
*PSC {0|1}
*PSC?
*SRE <enable value>
*SRE?
*STB?
*WAI
```

IEEE-488.2 Common Commands

(*see page 120 for more information*)

```
*CLS
*ESR?
*ESE <enable value>
*ESE?
*IDN?
*OPC
*OPC?
*PSC {0|1}
*PSC?
*RST
*SAV {1|2|3|4|5}
*RCL {1|2|3|4|5}
*STB?
*SRE <enable value>
*SRE?
*TRG
*TST?
*WAI
```

Simplified Programming Overview

This section gives an overview of the basic techniques used to program the power supply over the remote interface. This section is only an overview and does not give all of the details you will need to write your own application programs. Refer to the remainder of this chapter and also chapter 6, "Application Programs", for more details and examples. Also refer to the programming reference manual that came with your computer for details on outputting command strings and entering data.

Using the APPLy Command

The `APPLy` command provides the most straightforward method to program the power supply over the remote interface. For example, the following statement executed from your computer will set the power supply to an output of 3 V rated at 1 A:

"`APPL 3.0, 1.0`"

Using the Low-Level Commands

Although the `APPLy` command provides the most straightforward method to program the power supply, the low-level commands give you more flexibility to change individual parameters. For example, the following statements executed from your computer will set the power supply to an output of 3 V rated at 1 A:

"`VOLT 3.0`"	*Set output voltage to 3.0 V*
"`CURR 1.0`"	*Set output current to 1.0 A*

Reading a Query Response

Only the query commands (commands that end with " ? ") will instruct the power supply to send a response message. Queries return either output values or internal instrument settings. For example, the following statements executed from your computer will read the power supply's error queue and print the most recent error:

`dimension statement`	*Dimension string array (80 elements)*
"`SYST:ERR?`"	*Read error queue*
`bus enter statement`	*Enter error string into computer*
`print statement`	*Print error string*

Selecting a Trigger Source

The power supply will accept a "bus" (software) trigger or an immediate internal trigger as a trigger source. By default, the "BUS" trigger source is selected. If you want the power supply to use an immediate internal trigger, you must select "`IMMediate`". For example, the following statements executed from your computer will set to an output of 3 V/1 A immediately:

"`VOLT:TRIG 3.0`"	*Set the triggered voltage level to 3.0 V*
"`CURR:TRIG 1.0`"	*Set the triggered current level to 1.0 A*
"`TRIG:SOUR IMM`"	*Select the immediate trigger as a source*
"`INIT`"	*Cause the trigger system to initiate*

Power Supply Programming Ranges

The `SOURce` subsystem requires parameters for programming values. The available programming value for a parameter varies according to the desired output range of the power supply. The following table lists the programming values available and `MINimum`, `MAXimum`, `DEFault` and reset values of your power supply.

Refer to this table to identify programming values when programming the power supply.

Table 4-1. Agilent E3646A/47A/48A/49A Programming Ranges

		E3646A		E3647A		E3648A		E3649A	
		0 - 8V/ 3A Range	0 - 20V/ 1.5A Range	0 - 35V/ 0.8A Range	0 - 60V/ 0.5A Range	0 - 8V/ 5A Range	0 - 20V/ 2.5A Range	0 - 35V/ 1.4A Range	0 - 60V/ 0.8A Range
Voltage	**Programming Range**	0 V to 8.24 V	0 V to 20.60 V	0 V to 36.05 V	0 V to 61.8 V	0 V to 8.24 V	0 V to 20.60 V	0 V to 36.05 V	0 V to 61.8 V
	MAX Value	8.24 V	20.60 V	36.05 V	61.8 V	8.24 V	20.60 V	36.05 V	61.8 V
	MIN Value	0 V		0 V		0 V		0 V	
	DEFault Value	0 V		0 V		0 V		0 V	
	***RST Value**	0 V		0 V		0 V		0 V	
Current	**Programming Range**	0 A to 3.09 A	0 A to 1.545 A	0 A to 0.824 A	0 A to 0.515 A	0 A to 5.15 A	0 A to 2.575 A	0 A to 1.442 A	0 A to 0.824 A
	MAX Value	3.09 A	1.545 A	0.824 A	0.515 A	5.15 A	2.575 A	1.442 A	0.824 A
	MIN Value	0 A		0 A		0 A		0 A	
	DEFault Value	3 A	1.5 A	0.8 A	0.5 A	5 A	2.5 A	1.4 A	0.8 A
	***RST Value**	3.00 A		0.8 A		5.00 A		1.4 A	

Using the **APPLy** Command

The APPLy command provides the most straightforward method to program the power supply over the remote interface. You can select the output voltage and current in one command.

APPLy {<*voltage*>| DEF | MIN | MAX}[,{<*current*>| DEF | MIN | MAX}]

This command is combination of VOLTage and CURRent commands.

The APPLy command changes the power supply's output to the newly programmed values only if the programmed values are valid within the presently selected range. An execution error will occur if the programmed values are not valid within the selected range.

You can substitute "MINimum", "MAXimum", or "DEFault" in place of a specific value for the *voltage* and *current* parameters. For more details of parameters, see Table 4-1 for each model.

If you specify only one parameter of the APPLy command, the power supply regards it as voltage setting value.

APPLy?

Query the power supply's present voltage and current setting values and returns a quoted string. The voltage and current are returned in sequence as shown in the sample string below (the quotation marks are returned as part of the string).

"8.00000,3.00000" *(E3646A model)*

Output Setting and Operation Commands

This section describes low-level commands used to program the power supply. Although the `APPLy` command provides the most straightforward method to program the power supply, the low-level output setting commands give you more flexibility to change the individual parameters.

CURRent{<*current*>| MINimum | MAXimum | UP | DOWN}

Program the immediate current level of the power supply. The immediate level is the current value of the output terminals.

The `CURRent` command changes the output of the power supply to the newly programmed value regardless of the output range presently selected.

You can substitute "`MINimum`" or "`MAXimum`" in place of a specific value for the current parameter. `MIN` selects the lowest current values of "0" amps. `MAX` selects the highest current values allowed for the selected range.

This command also increases or decreases the immediate current level using the "`UP`" or "`DOWN`" parameter by a predetermined amount. The command `CURRent:STEP` sets the amount of increase or decrease. *Notice* that a new increment setting will cause an execution error -222 (Data out of range) when the maximum or the minimum rated current is exceeded.

CURRent? [MINimum | MAXimum]

Return the presently programmed current level of the power supply. `CURR? MAX` and `CURR? MIN` return the highest and lowest programmable current levels for the selected range.

CURRent:STEP {<*numeric value*>| DEFault}

Set the step size for current programming with the `CURRent UP` and `CURRent DOWN` commands. See the example in the *next* page.

To set the step size to the minimum resolution, set the step size to "`DEFault`". The minimum resolution of the step size is approximately 0.052 mA (E3646A), 0.014 mA (E3647A), 0.095 mA (E3648A), and 0.027 mA (E3649A), respectively.

The `CURR:STEP? DEF` returns the minimum resolution of your instrument. The immediate current level increases or decreases by the value of the step size. For example, the output current will increase or decrease 10 mA if the step size is 0.01. At `*RST`, the step size is the value of the minimum resolution.

CURRent:STEP? [DEFault]
Return the value of the step size currently specified. The returned parameter is a numeric value. "DEFault" gives the minimum resolution of the step size in unit of amps.

CURRent:TRIGgered {<*current*>| MINimum | MAXimum}
Program the pending triggered current level. The pending triggered current level is a stored value that is transferred to the output terminals when a trigger occurs. A pending triggered level is not affected by subsequent CURRent commands.

CURRent:TRIGgered? [MINimum | MAXimum]
Query the triggered current level presently programmed. If no triggered level is programmed, the CURRent level is returned.

Example

The following program segments show how to use the CURR UP or CURR DOWN command to increase or decrease the output current with the CURR:STEP command.

"CURR:STEP 0.01"	*Set the step size to 0.01 A*
"CURR UP"	*Increase the output current*
"CURR:STEP 0.02"	*Set the step size to 0.02 A*
"CURR DOWN"	*Decrease the output current*

INSTrument[:SELect] {OUTPut1 | OUTPut2 | OUT1 | OUT2}
Select the output to be programmed one of the two outputs by the output identifier. The outputs of the power supply are considered as two logical instruments. The INSTrument command provides a mechanism to identify and select an output. When one output is selected, the other output is unavailable for programming until selected. The commands which are affected by the INSTrument command are output setting command (SOURce), measurement command (MEASure), and calibration command (CALibration).

INSTrument[:SELect]?
Return the currently selected output by the INSTrument[:SELect] or INSTrument:NSELect command. The returned value is "OUTP1" or "OUTP2".

INSTrument:NSELect {1 | 2}

Select the output to be programmed one of the two outputs by *a numeric value* instead of the output identifier used in the `INSTrument:NSELect` or `INSTrument[:SELect]` command. "1" selects output1, and "2" selects output2.

INSTrument:NSELect?

Return the currently selected output by the `INSTrument[SELect]`or `INSTrument[SELect]` command. The returned parameter is "1" for output1, "2" for output2.

INSTrument:COUPle[:TRIGger] {ON | OFF}

Enable or disable a coupling between two logical outputs of the power supply. The couple command consists of an optional subsystem node followed by a signal parameter. The *only* valid parameter for the optional subsystem node is `TRIGger` subsystem. If no node follows the couple command, `TRIGger` subsystem is assumed to be coupled.

The parameter indicates to which logical outputs the specified coupling is to apply. A list of outputs specifies a particular set of logical outputs to be coupled. At `*RST`, all outputs are uncoupled.

Example

The following program segment shows how to use the `INSTrument:COUPle` command to couple two outputs with voltage and current triggered levels. The power supply is set to the newly programmed values as set by the `VOLTage:TRIGgered` and `CURRent:TRIGgered` commands.

"`INST:SEL OUT1`"	*Select the output1*
"`VOLT:TRIG 6`"	*Set triggered level to 6 V*
"`CURR:TRIG 3`"	*Set triggered level to 3 A*
"`INST:SEL OUT2`"	*Select the output2*
"`VOLT:TRIG 18`"	*Set triggered level to 18 V*
"`CURR:TRIG 0.7`"	*Set triggered level to 0.7 A*
"`INST:COUP:TRIG ON`"	*Couple the output1 and the output2*
"`TRIG:SOUR IMM`"	*Set trigger to immediate*
"`INIT`"	*Trigger the power supply to output the trigger values for the output1 and output2 supplies.*

INSTrument:COUPle[:TRIGger]?
Query the output coupling state of the power supply. The returned value is "0" (OFF) or "1" (ON).

MEASure:CURRent?
Query the current measured across the current sense resistor inside the power supply.

MEASure[:VOLTage]?
Query the voltage measured at the sense terminals of the power supply.

OUTPut:TRACk[:STATe] {ON | OFF}
Enable or disable the power supply to operate in the track mode. See "Tracking Operation" on page 44 for more information on tracking operation. At `*RST`, the track mode is disabled.

OUTPut:TRACk[:STATe]?
Query the tracking mode state of the power supply. The returned value is "0" (OFF) or "1" (ON).

VOLTage {<*voltage*>**| MINimum | MAXimum | UP | DOWN}**
Program the immediate voltage level of the power supply. The immediate level is the voltage value of the output terminals.

The `VOLTage` command changes the output of the power supply to the newly programmed value regardless of the output range presently selected.

This command also increases or decreases the immediate voltage level using the "`UP`" or "`DOWN`" parameter by a predetermined amount. The command `VOLTage:STEP` sets the amount of increase or decrease. Notice that a new increment setting will cause an execution error -222 (Data out of range) when the maximum or the minimum rated voltage is exceeded.

VOLTage? [MINimum | MAXimum]
Query the presently programmed voltage level of the power supply.

VOLTage:STEP {<*numeric value*> | DEFault}

Set the step size for voltage programming with the `VOLT UP` and `VOLT DOWN` commands. See the example below.

To set the step size to the minimum resolution, set the step size to "`DEFault`". The minimum resolution of the step size is approximately 0.35 mV (E3646A), 1.14 mV (E3647A), 0.38 mV (E3648A), and 1.14 mV (E3649A), respectively.

The immediate voltage level increases or decreases by the value of the step size. For example, the output voltage will increase or decrease 10 mV if the step size is 0.01. At `*RST`, the step size is the value of the minimum resolution.

VOLTage:STEP? [DEFault]

Return the value of the step size currently specified. The returned parameter is a numeric value. "`DEFault`" gives the minimum resolution step size in unit of volts.

Example

The following program segments show how to use the `VOLT UP` or `VOLT DOWN` command to increase or decrease the output voltage with the `VOLT:STEP` command.

"`VOLT:STEP 0.01`"	*Set the step size to 0.01 V*
"`VOLT UP`"	*Increase the output voltage*
"`VOLT:STEP 0.02`"	*Set the step size to 0.02 V*
"`VOLT DOWN`"	*Decrease the output voltage*

VOLTage:TRIGgered {<*voltage*>| MINimum | MAXimum}

Program the pending triggered voltage level. The pending triggered voltage level is a stored value that is transferred to the output terminals when a trigger occurs. A pending triggered level is not affected by subsequent `VOLTage` commands.

VOLTage:TRIGgered? [MINimum | MAXimum]

Query the triggered voltage level presently programmed. If no triggered level is programmed, the `VOLT` level is returned.

* For E3646A/48A models **For E3647A/49A models

VOLTage:PROTection {<*voltage*>|MINimum|MAXimum}
Set the voltage level at which the overvoltage protection (OVP) circuit will trip. If the peak output voltage exceeds the OVP level, then the power supply output is shorted by an internal SCR. An overvoltage condition can be cleared with the `VOLT:PROT:CLE` command after the condition that caused the OVP trip is removed.

VOLTage:PROTection? [MINimum | MAXimum]
Query the overvoltage protection trip level presently programmed.

VOLTage:PROTection:STATe {0 | 1 | OFF | ON}
Enable or disable the overvoltage protection function. At `*RST`, this value is set to "ON".

VOLTage:PROTection:STATe?
Query the state of the overvoltage protection function. The returned parameter is "0" (OFF) or "1" (ON).

VOLTage:PROTection:TRIPped?
Return a "1" if the overvoltage protection circuit is tripped and not cleared or a "0" if not tripped.

VOLTage:PROTection:CLEar
Cause the overvoltage protection circuit to be cleared. After this command, the output voltage is restored to the state it was in before the protection feature occurred and the OVP trip level remains unchanged to the value presently programmed. Before sending this command, lower the output voltage below the trip OVP point, or raise the OVP trip level above the output setting. *Note that the overvoltage condition caused by an external source must be removed first before proceeding this command.*

VOLTage:RANGe {P8V* | P20V* | P35V | P60V** | LOW | HIGH}**
Select an output range to be programmed by the identifier. For example, "P20V" or "HIGH" is the identifier for the 20V/1.5A range and "P8V" or "LOW" is for the 8V/3A range (for E3646A model). At `*RST`, low voltage range is selected.

VOLTage:RANGe?
Query the currently selected range. The returned parameter is "P8V" or "P35V" for low voltage range, or "P20V" or "P60V" for high voltage range.

Triggering

The power supply's triggering system allows a change in voltage and current when receiving a trigger, to select a trigger source, and to insert a trigger. Triggering the power supply is a multi-step process.

- First, you must specify the source from which the power supply will accept the trigger. The power supply will accept a bus (software) trigger or an immediate trigger from the remote interface.
- Then, you can set the time delay between the detection of the trigger on the specified trigger source and the start of any corresponding output change. *Notice that the time delay is valid for only the bus trigger source.*
- Finally, you must provide an `INITiate` command. If the `IMMediate` source is selected, the selected output is set to the triggered level immediately. But if the trigger source is the bus, the power supply is set to the triggered level after receiving the Group Execute Trigger (GET) or `*TRG` command.

Trigger Source Choices

You must specify the source from which the power supply will accept a trigger. The trigger is stored in volatile memory; the source is set to bus when the power supply has been off or after a remote interface reset.

Bus (Software) Triggering

- To select the bus trigger source, send the following command.

  "`TRIG:SOUR BUS`"

- To trigger the power supply from the remote interface (GPIB or RS-232) after selecting the bus source, send the `*TRG` (trigger) command. When the `*TRG` is sent, the trigger action starts after the specified time delay if any delay is given.
- You can also trigger the power supply from the GPIB interface by sending the IEEE-488 Group Execute Trigger (GET) message. The following statement shows how to send a GET from a Hewlett-Packard controller.

  "`TRIGGER 705`" (group execute trigger)

- To ensure synchronization when the bus source is selected, send the `*WAI` (wait) command. When the `*WAI` command is executed, the power supply waits for all pending operations to complete before executing any additional commands. For example, the following command string guarantees that the first trigger is accepted and is executed before the second trigger is recognized.

  "`TRIG:SOUR BUS;*TRG;*WAI;*TRG;*WAI`"

- You can use the `*OPC?` (operation complete query) command or the `*OPC` (operation complete) command to signal when the operation is complete. The `*OPC?` command returns "1" to the output buffer when the operation is complete. The `*OPC` command sets the "OPC" bit (bit 0) in the Standard Event register when the operation is complete.

Immediate Triggering

- To select the immediate trigger source, send the following command.

  "`TRIG:SOUR IMM`"

- When the `IMMediate` is selected as a trigger source, an `INITiate` command immediately transfers the `VOLT:TRIG` or `CURR:TRIG` value to `VOLT` or `CURR` value. Any delay is ignored.

Triggering Commands

INITiate

Cause the trigger system to initiate. This command completes one full trigger cycle when the trigger source is an immediate and initiates the trigger subsystem when the trigger source is bus.

TRIGger:DELay {<*seconds*>| MINimum | MAXimum}

Set the time delay between the detection of an event on the specified trigger source and the start of any corresponding trigger action on the power supply output. Select from 0 to 3600 seconds. `MIN` = 0 seconds. `MAX` = 3600 seconds. At `*RST`, this value is set to 0 seconds.

TRIGger:DELay?[MINimum | MAXimum]

Query the trigger delay.

TRIGger:SOURce {BUS | IMMediate}

Select the source from which the power supply will accept a trigger. The power supply will accept a bus (software) trigger or an internal immediate trigger. At `*RST`, the bus trigger source is selected.

TRIGger:SOURce?

Query the present trigger source. Returns "BUS" or "IMM".

*TRG

Generate a trigger to the trigger subsystem that has selected a bus (software) trigger as its source `(TRIG:SOUR BUS)`. The command has the same effect as the Group Execute Trigger (GET) command. For RS-232 operation, make sure the power supply is in the remote interface mode by sending the `SYST:REM` command first.

System-Related Commands

DISPlay {OFF | ON}

Turn the front-panel display off or on. When the display is turned off, outputs are not sent to the display and all annunciators are disabled except the **ERROR** annunciator.

The display state is automatically turned on when you return to the local mode. Press Store (Local) (**Local**) key to return to the local state from the remote interface.

DISPlay:MODE {VI | VV | II}

Set the front-panel display mode of the power supply. V-V display mode shows the voltages of the two outputs. I-I display mode shows the currents of the two outputs. V-I display mode shows the voltage and current for each output. At `*RST`, the power supply is set to the V-I display mode.

DISPlay:MODE?

Query the state of the display mode. Returns a string VV, II, or VI.

DISPlay?

Query the front-panel display setting. Returns "0" (OFF) or "1" (ON).

DISPlay:TEXT <*quoted string*>

Display a message on the front panel. The power supply will display up to 11 characters in a message; any additional characters are truncated. Commas, periods, and semicolons share a display space with the preceding character, and are not considered individual characters.

DISPlay:TEXT?

Query the message sent to the front panel and returns a quoted string.

DISPlay:TEXT:CLEar

Clear the message displayed on the front panel.

OUTPut {OFF | ON}

Enable or disable the outputs of the power supply. When the output is disabled, the voltage value is 0 V and the current value is 1 mA. At `*RST`, the output state is OFF.

OUTPut?

Query the output state of the power supply. The returned value is "0" (OFF) or "1" (ON).

OUTPut:RELay {OFF | ON}

Set the state of two TTL signals on the RS-232 connector pin 1 and pin 9. These signals are intended for use with an external relay and relay driver. At `*RST`, the `OUTPUT:RELay` state is OFF. See "*Disconnecting the Output Using an External Relay*", on page 56 for more information.

Note

Do not use the RS-232 interface if you have configured the power supply to output relay control signals. Internal components on the RS-232 circuitry may be damaged.

OUTPut:RELay?

Query the state of the TTL relay logic signals.

SYSTem:BEEPer

Issue a single beep immediately.

SYSTem:ERRor?

Query the power supply's error queue. A record of up to 20 errors is stored in the power supply's error queue. Errors are retrieved in first-in-first-out (FIFO) order. The first error returned is the first error that was stored. When you have read all errors from the queue, the **ERROR** annunciator turns off and the errors are cleared. See "*Error Messages*", starting on page 121 for more details.

SYSTem:VERSion?

Query the power supply to determine the present SCPI version. The returned value is of a string in the form YYYY.V where the "Y's" represent the year of the version, and the "V" represents a version number for that year (for example, 1997.0).

*IDN?

Read the power supply's identification string. The power supply returns four fields separated by commas. The first field is the manufacturer's name, the second field is the model number, the third field is not used (always "0"), and the *fourth field* is a revision code which contains three numbers. The first number is the firmware revision number for the main power supply processor; the second is for the *input/output* processor; and the third is for the front-panel processor.

The command returns a string with the following format (be sure to dimension a string variable with at least *40 characters*):

```
Agilent Technologies,E3646A,0,X.X-Y.Y-Z.Z  (E3646A model)
```

*TST?

Perform a *complete* self-test of the power supply. Returns "0" if the self-test passes or "1" or any non-zero value if it fails. If the self-test fails, an error message is also generated with additional information on why the test failed.

*RST

Reset the power supply to its *power-on* state. The table below shows the state of the power supply after a RESET from the *Recall* menu or `*RST` command from the remote interface.

Command	E3646A state	E3647A state	E3648A state	E3649A state
`CURR`	3 A	0.8 A	5 A	1.4 A
`CURR:STEP`	0.052 mA	0.014 mA	0.095 mA	0.027 mA
`CURR:TRIG`	3 A	0.8 A	5 A	1.4 A
`DISP`	ON			
`OUTP`	OFF			
`OUTP:REL`	OFF			
`TRIG:DEL`	0			
`TRIG:SOUR`	BUS			
`VOLT`	0 V			
`VOLT:STEP`	0.35 mV	1.14 mV	0.38 mV	1.14 mV
`VOLT:TRIG`	0 V			
`VOLT:PROT`	22.0 V	66.0 V	22.0 V	66.0 V
`VOLT:PROT:STAT`	ON			
`VOLT:RANG`	P8V (Low)	P35V (Low)	P8V (Low)	P35V (Low)

Note: The voltage and current step sizes listed above are typical value.

State Storage Commands

The power supply has five storage locations in non-volatile memory to store power supply states. The locations are numbered 1 through 5. You can also assign a name to each of the locations (1 through 5) for use from the front panel.

***SAV { 1 | 2 | 3 | 4 | 5 }**
Store (Save) the present state of the power supply to the specified location. Any state previously stored in the same location is overwritten (no error is generated).

- A power-on reset (`*RST` command) does not affect the configurations stored in memory. Once a state is stored, it remains until it is overwritten or specifically deleted.
- The state storage feature "remembers" the states or values of the following commands:

  `CURR, CURR:STEP, CURR:TRIG, OUTP, OUTP:REL, TRIG:DEL, TRIG:SOUR, VOLT, VOLT:STEP, VOLT:TRIG, VOLT:PROT, VOLT:PROT:STAT,` and `VOLT:RANG`

***RCL { 1 | 2 | 3 | 4 | 5 }**
Recall the power supply state stored in the specified storage location. When shipped from the factory, storage locations "1" through "5" are empty.

Note: `DISP {OFF|ON}` can be stored and recalled in remote interface mode only. Going to local mode automatically sets the display state to ON.

MEMory:STATe
:NAME { 1 | 2 | 3 | 4 | 5} , <*quoted name*>
:NAME? { 1 | 2 | 3 | 4 | 5}
Assign a name to the specified storage location. From the remote interface, you can only recall a stored state using a number (1 through 5). The `:NAME?` query returns a quoted string containing the name currently assigned to the specified storage location. If the specified location has no name assigned, an empty string (" ") is returned. The name can contain up to 9 characters. The first character can be a alphanumeric. Blank spaces are not allowed. An error is generated if you specify a name with more than 9 characters. See "*State Storage*", on page 57 for more information. An example is shown below.

"`MEM:STATE:NAME 1,'P15V_TEST'`"

If you do not specify a name (note that the name parameter is optional), no name is assigned to that state. This provides a way to erase a name (however, the stored state is not deleted).

Calibration Commands

See "Calibration Overview", starting on page 64 for an overview of the calibration features of the power supply. An example program for calibration is listed on page 96. For more detailed discussion on the calibration procedures, see the *Service Information*.

N o t e

*When you calibrate the power supply, you should **NOT** set the OVP to ON state in order to prevent OVP from tripping.*

CALibration:COUNt?
Query the power supply to determine the number of times it has been calibrated. Your power supply was calibrated before it left the factory. When you receive your power supply, read the count to determine its initial value. Since the value increments by one for each calibration point, a complete calibration will increase the value by 6 counts.

CALibration:CURRent[:DATA] <*numeric value*>
This command can only be used after calibration is unsecured and the output state is ON. It enters a current value that you obtained by reading an external meter. You must first select the minimum calibration level (`CAL:CURR:LEV MIN`) for the value being entered, then select the middle and maximum calibration levels (`CAL:CURR:LEV MID` and `CAL:CURR:LEV MAX`) for the value being entered. Three successive values must be selected and entered. The power supply then computes new calibration constants. These constants are then stored in *non-volatile* memory.

CALibration:CURRent:LEVel {MINimum | MIDdle | MAXimum}
This command can only be used after calibration is unsecured and the output state is ON. It sets the power supply to a calibration point that is entered with `CAL:CURR` command. During calibration, three points must be entered and the low-end point (MIN) must be selected and entered first.

CALibration:SECure:CODE <*quoted new code*>
Enter a new security code. To change the security code, first unsecure the power supply using the old security code. Then, enter the new code. The calibration code may contain up to 11 characters over the remote interface. See "Calibration Overview" on page 64 for more information.

CALibration:SECure:STATe {OFF | ON},<*quoted code*>
Unsecure or secure the power supply with a security for calibration.

CALibration:SECure:STATe?
Query the secured state for calibration of the power supply. The returned parameter is "0" (OFF) or "1" (ON).

CALibration:STRing <*quoted string*>
Record calibration information about your power supply. For example, you can store such information as the last calibration date, the next calibration due date, or the power supply's serial number. The calibration message may contain up to 40 characters. The power supply should be unsecured before sending a calibration message.

CALibration:STRing?
Query the calibration message and returns a quoted string.

CALibration:VOLTage[:DATA] <*numeric value*>
This command can only be used after calibration is unsecured and the output state is ON. It enters a voltage value that you obtained by reading an external meter. You must first select the minimum calibration level (`CAL:VOLT:LEV MIN`) for the value being entered. You must then select the middle and maximum calibration levels (`CAL:VOLT:LEV MID` and `CAL:VOLT:LEV MAX`) for the value being entered. Three successive values must be selected and entered. The power supply then computes new voltage calibration constants. These constants are then stored in *non-volatile* memory.

CALibration:VOLTage:LEVel {MINimum | MIDdle | MAXimum}
This command can only be used after calibration is unsecured and the output state is ON. It sets the power supply to a calibration point that is entered with `CAL:VOLT` command. During calibration, three points must be entered and the low-end point (MIN) must be selected and entered first.

CALibration:VOLTage:PROTection
Calibrate the overvoltage protection circuit of the power supply. It takes about 10 seconds to execute the command. The calibration must be unsecured and the output be opened before calibrating the overvoltage protection circuit. The power supply automatically performs the calibration and stores the new overvoltage constant in *nonvolatile* memory. *Notice that voltage calibration precedes before sending this command.*

Calibration Example

1. **Select the output to be calibrated and enable the output of the power supply by sending the commands:**
   "INST:SEL {OUT1|OUT2}"
   "OUTP ON"
2. **Disable the voltage protection function.**
   "VOLT:PROT:STAT OFF"
3. **Unsecure the power supply with the secure code before calibration.**
   "CAL:SEC:STAT OFF, '<code>'"
4. **For voltage calibration, connect a digital voltmeter (DVM) across the power supply's output terminals.**
5. **Set the power supply to low-end (MIN) calibration point.**
   "CAL:VOLT:LEV MIN"
6. **Enter the reading you obtained from the DVM.**
   "CAL:VOLT:DATA 0.549"
7. **Set the power supply to middle (MID) calibration point.**
   "CAL:VOLT:LEV MID"
8. **Enter the reading you obtained from the DVM.**
   "CAL:VOLT:DATA 11.058"
9. **Set the power supply to high (MAX) calibration point.**
   "CAL:VOLT:LEV MAX"
10. **Enter the reading you obtained from the DVM.**
    "CAL:VOLT:DATA 21.566"
11. **Set the power supply to overvoltage protection calibration point.**
    "CAL:VOLT:PROT"
12. **For current calibration, connect an appropriate current monitoring resistor (shunt) across the output terminals and connect the DVM across the shunt resistor.**
13. **Repeat steps (5) through (9) by substituting "CURR" for "VOLT" for current calibration. For example, "CAL:CURR:LEV MIN"**
14. **Repeat steps (1) through (13) for the other output calibration.**
15. **Record calibration information such as next calibration due date or contact person for future reference. The calibration string may contain up to 40 characters.**
    "CALibration:STRing '<string>'"

Notice: *You should wait for the DVM reading to stabilize for accurate calibration.*

Interface Configuration Commands

See also "Configuring the Remote Interface" in chapter 3 starting on page 48.

SYSTem:INTerface {GPIB | RS232}
Select the remote interface. Only one interface can be enabled at a time. The GPIB interface is selected when the power supply is shipped from the factory.

SYSTem:LOCal
Place the power supply in the *local* mode during RS-232 operation. All keys on the front panel are fully functional.

SYSTem:REMote
Place the power supply in the *remote* mode for RS-232 operation. All keys on the front panel, except the "**Local**" key, are disabled while in the remote mode.

> *It is very important that you send the* `SYST:REM` *command to place the power supply in the remote mode. Sending or receiving data over the RS-232 interface when not configured for remote operation can cause unpredictable results.*

SYSTem:RWLock
Place the power supply in the remote mode for RS-232 operation. This command is the same as the `SYST:REM` command except that all keys on the front panel are disabled, including the "**Local**" key.

<Ctrl-C>
Clear the operation in progress over the RS-232 interface and discard any pending output data. *This is equivalent to the IEEE-488 device clear action over the GPIB interface.*

The SCPI Status Registers

All SCPI instruments implement status registers in the same way. The status system records various instrument conditions in three register groups: the Status Byte register, the Standard Event register, and the Questionable Status register groups. The status byte register records high-level summary information reported in the other register groups. The diagram on the subsequent pages illustrates the SCPI status system used by the power supply.

What is an *Event* Register?

An *event register* is a read-only register that reports defined conditions within the power supply. Bits in an event register are *latched*. Once an event bit is set, subsequent state changes are ignored. Bits in an event register are automatically cleared by a query of that register (such as `*ESR?` or `STAT:QUES:EVEN?`) or by sending the `*CLS` (clear status) command. A reset (`*RST`) or device clear will not clear bits in event registers. Querying an event register returns a decimal value which corresponds to the binary-weighted sum of all bits set in the register.

What is an *Enable* Register?

An *enable register* defines which bits in the corresponding event register are logically ORed together to form a single summary bit. Enable registers are both readable and writable. Querying an enable register will not clear it. The `*CLS` (clear status) command does not clear enable registers but it does clear the bits in the event registers. To enable bits in an enable register, you must write a decimal value which corresponds to the binary-weighted sum of the bits you wish to enable in the register.

What is a *Multiple* Logical Output?

The two-logical outputs of the power supply include an `INSTrument` summary status register and an individual instrument `ISUMmary` register for each logical output. The `ISUMmary` registers report to the `INSTrument` register, which in turn reports to bit 13 of the Questionable status register. This is shown pictorially on the next page.

Using such a status register configuration allows a status event to be cross-referenced by output and type of event. The `INSTrument` register indicates which output(s) have generated an event. The `ISUMmary` register is a pseudo-questionable status register for a particular logical output.

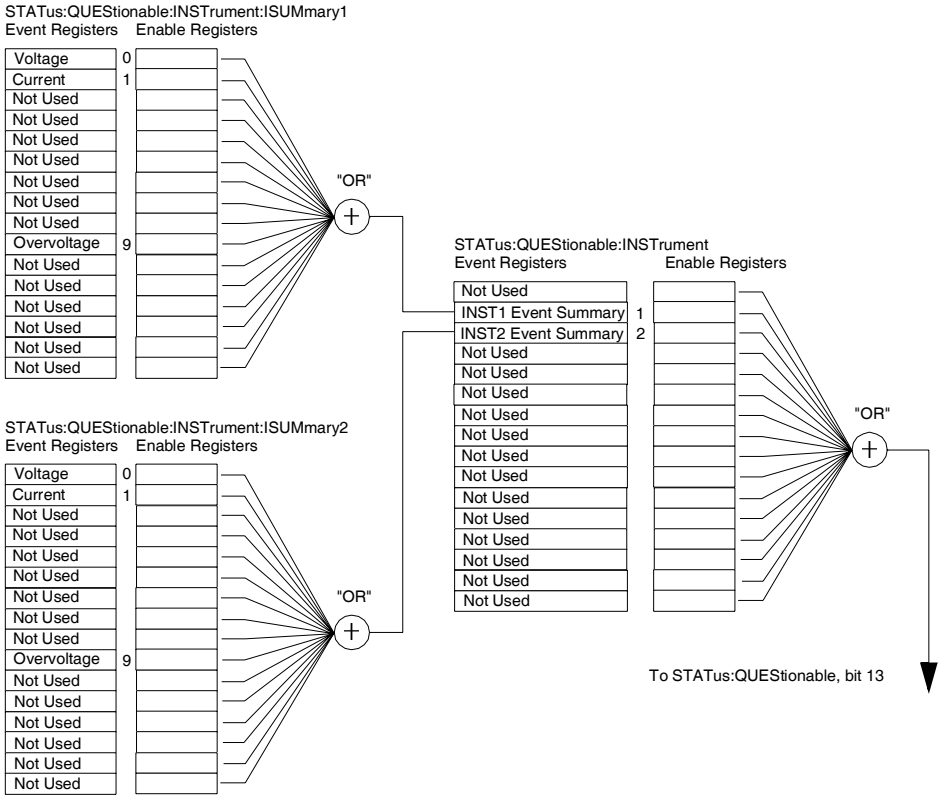

SCPI Status System

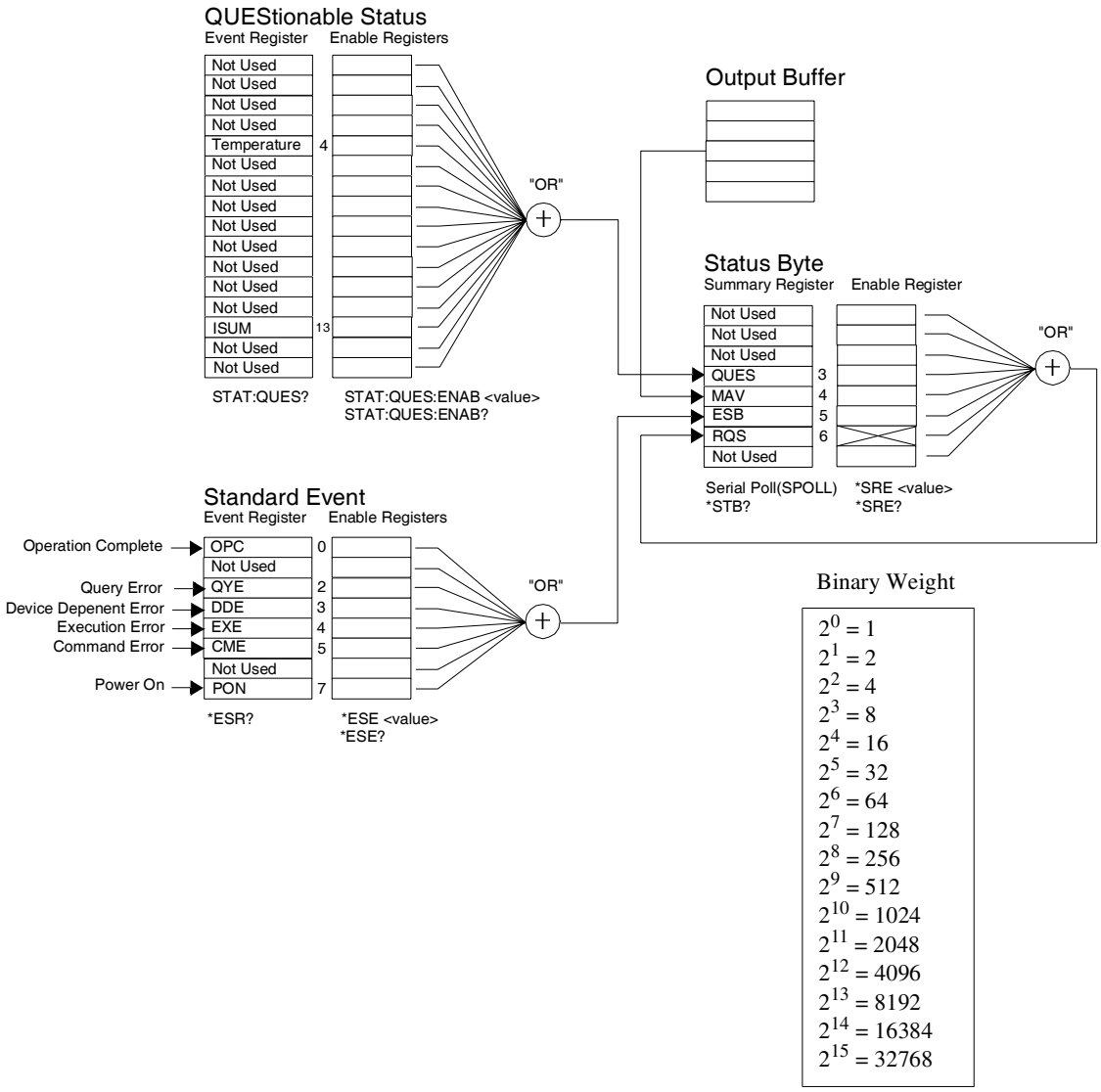

The Questionable Status Register

The Questionable Status register provides information about unexpected operation of the power supply. Bit 4 reports a fault with the fan, and bit 13 summarizes questionable outputs for any of the two supplies. For example, if one of the two supplies is in constant voltage mode and due to an overload looses regulation, bit 13 is set (latched). To read the register, send the command `STATus:QUEStionable?`.

To make use of bit 13 you must first enable registers you wish to summarize with bit 13. Send the command `STAT:QUES :INST:ENAB 6` to enable the Questionable Instrument register, then send the command `STAT:QUES:INST:ISUM<n>:ENAB 515` for each supply to enable the Questionable Instrument Summary register, where n is 1 or 2.

Table 4-3. Bit Definitions - Questionable Status Register

Bit		Decimal Value	Definition
0-3	Not Used	0	Always set to 0.
4	Overtemperature	16	The fan has a fault condition.
5-12	Not Used	0	Always set to 0.
13	ISUM	8192	Summary of `QUES:INST` and `QUES:INST:ISUM` registers.
14-15	Not Used	0	Always set to 0.

The Questionable Instrument Status Register

The Questionable Instrument register provides information about unexpected operations for each of the two supplies. For example, if the output1 supply is in the constant voltage mode and looses regulation, then bit 1 set indicating a possible overload in the output1 supply. The output2 supply is reported as bit 2. Send the command `STAT QUES:INST?` to read the register. The `STAT:QUES:INST:ISUM<n>` registers must be enabled to make use of the Questionable Instrument register. Send the command `STAT:QUES:INST:ISUM<n>:ENAB 515` to enable output n.

The Questionable Instrument Summary Register

There are two Questionable Instrument Summary registers, one for each supply output. These registers provide information about voltage and current regulation. Bit 0 is set when the voltage becomes unregulated, and bit 1 is set if the current becomes unregulated. For example, if a supply which is operating as a voltage source (constant voltage mode) momentarily goes to constant current mode, bit 0 is set to indicate that the voltage output is not regulated. Bit 9 reports that the overvoltage protection circuit has tripped. To read the register for each supply, send the command `STAT:QUES:INST:ISUM<n>?`, where n is 1 or 2.

To determine the operating mode (CV or CC) for the power supply send `STAT:QUES:INST:ISUM<n>:COND?`, where n is 1 or 2 depending on the output. Bit 1 true indicates the output is in constant voltage mode, bit 0 true indicates constant current mode, both bits true indicates neither the voltage nor the current is regulated, and both bits false indicates the outputs of the power supply are off.

The Questionable Status Event register is cleared when:

- You execute the `*CLS` (clear status) command.
- You query the event register using `STAT:QUES?` (Status Questionable Event register) command.

For example, 16 is returned when you have queried the status of the questionable event register, the temperature condition is questionable.

The Questionable Status Enable register is cleared when:

- You execute `STAT:QUES:ENAB 0` command.

The Standard Event Register

The Standard Event register reports the following types of instrument events: power-on detected, command syntax errors, command execution errors, self-test or calibration errors, query errors, or when an `*OPC` command is executed. Any or all of these conditions can be reported in the standard event summary bit (ESB, bit 5) of Status Byte register through the enable register. To set the enable register mask, you write a decimal value to the register using the `*ESE` (Event Status Enable) command.

> *An error condition (Standard Event register bit 2, 3, 4, or 5) will always record one or more errors in the power supply's error queue. Read the error queue using the* `SYST:ERR?` *command.*

Table 4-4. Bit Definitions – Standard Event Register

Bit		Decimal Value	Definition
0	OPC	1	Operation Complete. All commands prior to and including an `*OPC` command have been executed.
1	Not Used	0	Always set to 0.
2	QYE	4	Query Error. The power supply tried to read the output buffer but it was empty. Or, new command line was received before a previous query had been read. Or, both the input and output buffers are full.
3	DDE	8	Device Error. A self-test or calibration error occurred (see error numbers 601 through 750 in chapter 5).
4	EXE	16	Execution Error. An execution error occurred (see error numbers -211 through -224 in chapter 5).
5	CME	32	Command Error. A command syntax error occurred (see error numbers -101 through -178 in chapter 5).
6	Not Used	0	Always set to 0.
7	PON	128	Power On. Power has been turned off and on since the last time the event register was read or cleared.

The Standard Event register is cleared when:

- You execute the `*CLS` (clear status) command.
- You query the event register using the `*ESR?` (Event Status register) command.

For example, 28 (4 + 8 + 16) is returned when you have queried the status of the Standard Event register, QYE, DDE, and EXE conditions have occurred.

The Standard Event Enable register is cleared when:

- You execute the `*ESE 0` command.
- You turn on the power and have previously configured the power supply using the `*PSC 1` command.
- The enable register will not be cleared at power-on if you have previously configured the power supply using the `*PSC 0` command.

The Status Byte Register

The Status Byte summary register reports conditions from the other status registers. Query data that is waiting in the power supply's output buffer is immediately reported through the "Message Available" bit (bit 4) of Status Byte register. Bits in the summary register are not latched. Clearing an event register will clear the corresponding bits in the Status Byte summary register. Reading all messages in the output buffer, including any pending queries, will clear the message available bit.

Table 4-5. Bit Definitions – Status Byte Summary Register

Bit		Decimal Value	Definition
0-2	Not Used	0	Always set to 0.
3	QUES	8	One or more bits are set in the questionable status register (bits must be "enabled" in the enable register).
4	MAV	16	Data is available in the power supply output buffer.
5	ESB	32	One or more bits are set in the standard event register (bits must be "enabled" in the enable register).
6	RQS	64	The power supply is requesting service (serial poll).
7	Not Used	0	Always set to 0.

The Status Byte Summary register is cleared when:

- You execute the `*CLS` (clear status) command.
- Querying the Standard Event register (`*ESR?` command) will clear only bit 5 in the Status Byte summary register.

For example, 24 (8 + 16) is returned when you have queried the status of the Status Byte register, QUES and MAV conditions have occurred.

The Status Byte Enable register (Request Service) is cleared when:

- You execute the `*SRE 0` command.
- You turn on the power and have previously configured the power supply using the `*PSC 1` command.
- The enable register will not be cleared at power-on if you have previously configured the power supply using `*PSC 0`.

Using Service Request (SRQ) and Serial POLL

You must configure your bus controller to respond to the IEEE-488 service request (SRQ) interrupt to use this capability. Use the Status Byte enable register (`*SRE` command) to select which summary bits will set the low-level IEEE-488 service request signal. When bit 6 (request service) is set in the Status Byte, an IEEE-488 service request interrupt message is automatically sent to the bus controller. The bus controller may then poll the instruments on the bus to identify which one requested service (the instrument with bit 6 set in its Status Byte).

The request service bit is cleared only by reading the Status Byte using an IEEE-488 serial poll or by reading the event register whose summary bit is causing the service request.

To read the Status Byte summary register, send the IEEE-488 serial poll message. Querying the summary register will return a decimal value which corresponds to the binary-weighted sum of the bits set in the register. Serial poll will automatically clear the “request service” bit in the Status Byte summary register. No other bits are affected. Performing a serial poll will not affect instrument throughput.

Caution

The IEEE-488 standard does not ensure synchronization between your bus controller program and the instrument. Use the `*OPC?` command to guarantee that commands previously sent to the instrument have completed. Executing a serial poll before a `*RST`, `*CLS`, or other commands have completed can cause previous conditions to be reported.

Using *STB? to Read the Status Byte

The `*STB?` (Status Byte query) command is similar to a serial poll but it is processed like any other instrument command. The `*STB?` command returns the same result as a serial poll but the "request service" bit (bit 6) is not cleared.

The `*STB?` command is not handled automatically by the IEEE-488 bus interface hardware and will be executed only after previous commands have completed. Polling is not possible using the `*STB?` command. Executing the `*STB?` command does not clear the Status Byte summary register.

Using the Message Available Bit (MAV)

You can use the Status Byte "message available" bit (bit 4) to determine when data is available to read into your bus controller. The power supply subsequently clears bit 4 *only* after all messages have been read from the output buffer.

To Interrupt Your Bus Controller Using SRQ

1. Send a device clear message to clear the power supply's output buffer (e.g., `CLEAR 705`).
2. Clear the event registers with the `*CLS` (clear status) command.
3. Set up the enable register masks. Execute the `*ESE` command to set up the Standard Event register and the `*SRE` command for the Status Byte.
4. Send the `*OPC?` (operation complete query) command and enter the result to ensure synchronization.
5. Enable your bus controller's IEEE-488 SRQ interrupt.

To Determine When a Command Sequence is Completed

1. Send a device clear message to clear the power supply's output buffer (e.g., `CLEAR 705`).
2. Clear the event registers with the `*CLS` (clear status) command.
3. Enable the "operation complete" bit (bit 0) in the Standard Event register by executing the `*ESE 1` command.
4. Send the `*OPC?` (operation complete query) command and enter the result to ensure synchronization.
5. Execute your command string to program the desired configuration, and then execute the `*OPC` (operation complete) command as the last command. When the command sequence is completed, the "operation complete" bit (bit 0) is set in the Standard Event register.
6. Use a serial poll to check to see when bit 5 (standard event) is set in the Status Byte summary register. You could also configure the power supply for an SRQ interrupt by sending `*SRE 32` (Status Byte enable register, bit 5).

Using *OPC to Signal When Data is in the Output Buffer

Generally, it is best to use the "operation complete" bit (bit 0) in the Standard Event register to signal when a command sequence is completed. This bit is set in the register after an `*OPC` command has been executed. If you send `*OPC` after a command which loads a message in the power supply's output buffer (query data), you can use the "operation complete" bit to determine when the message is available. However, if too many messages are generated before the `*OPC` command executes (sequentially), the output buffer will fill and the power supply will stop processing commands.

Status Reporting Commands

See diagram "SCPI Status System", on page 100 in this chapter for detailed information of the status register structure of the power supply.

SYSTem:ERRor?
Query the power supply's error queue. A record of up to 20 errors is stored in the power supply's error queue. Errors are retrieved in first-in-first-out (FIFO) order. The first error returned is the first error that was stored. When you have read all errors from the queue, the **ERROR** annunciator turns off and the errors are cleared. See "*Error Messages*", starting on page 121 for more details.

STATus:QUEStionable[:EVENt]?
Query the Questionable Status Event register. The power supply returns a decimal value which corresponds to the binary-weighted sum of all bits in the register.

STATus:QUEStionable:ENABle <*enable value*>
Enable bits in the Questionable Status Enable register. The selected bits are then reported to the Status Byte.

STATus:QUEStionable:ENABle?
Query the Questionable Status Enable register. The power supply returns a binary-weighted decimal representing the bits set in the enable register.

STATus:QUEStionable:INSTrument[:EVENt]?
Query the Questionable Instrument Event register. The power supply returns a decimal value which corresponds to the binary-weighted sum of all bits in the register and clears the register.

STATus:QUEStionable:INSTrument:ENABle <*enable value*>
Set the value of the Questionable Instrument Enable register. This register is a mask for enabling specific bits from the Questionable Instrument Event register to set the Instrument Summary bit (ISUM, bit 13) of the Questionable Status register. The "ISUM" bit of the Questionable Status register is the logical OR of all the Questionable Instrument Event register bits that are enabled by the Questionable Instrument Enable register.

STATus:QUEStionable:INSTrument:ENABle?
Return the value of the Questionable Instrument Enable register.

STATus:QUEStionable:INSTrument:ISUMmary<n>[:EVENt]?
Return the value of the Questionable Instrument Isummary Event register for a specific output of the two-output power supply. The particular output must be specified by a numeric value. n is 1 or 2. "1" selects output1, and "2" selects output2. The event register is a read-only register which holds (latches) all events. Reading the Questionable Instrument Isummary Event register clears it.

STATus:QUEStionable:INSTrument:ISUMmary<n>:CONDition?
Return the CV or CC condition of the specified instrument. If "2" is returned, the queried instrument is in the CV operating mode. If "1" is returned, the queried instrument is in the CC operating mode. If "0" is returned, the outputs of the instrument are off or unregulated. If '3" is returned, the instrument is in the hardware failure. n is 1, 2, or 3.

STATus:QUEStionable:INSTrument:ISUMmary<n>:ENABle <*enable value*>
Set the value of the Questionable Instrument Isummary Enable register for a specific output of the two-output power supply. The particular output must be specified by a numeric value. n is 1 or 2. "1" selects output1, and "2" selects output2. This register is a mask for enabling specific bits from the Questionable Instrument Isummary Event register to set the Instrument Summary bit (bit 1 and 2) of the Questionable Instrument register. These bits 1 and 2 are the logical OR of all the Questionable Instrument Isummary Event register bits that are enabled by the Questionable Instrument Isummary Enable register.

STATus:QUEStionable:INSTrument:ISUMmary<n>:ENABle?
This query returns the value of the Questionable Instrument Isummary Enable register. n is 1 or 2.

***CLS**
Clear all event registers and Status Byte register.

***ESE** <*enable value*>
Enable bits in the Standard Event Enable register. The selected bits are then reported to the Status Byte.

***ESE?**
Query the Standard Event Enable register. The power supply returns a decimal value which corresponds to the binary-weighted sum of all bits in the register.

***ESR?**
Query the Standard Event register. The power supply returns a decimal value which corresponds to the binary-weighted sum of all bits in the register.

***OPC**
Set the "Operation Complete" bit (bit 0) of the Standard Event register after the command is executed.

***OPC?**
Return "1" to the output buffer after the command is executed.

***PSC { 0 | 1 }**
(Power-on status clear.) This command clears the Status Byte and the Standard Event register enable masks when power is turned on (`*PSC 1`). When `*PSC 0` is in effect, the Status Byte and Standard Event register enable masks are not cleared when power is turned on.

***PSC?**
Query the power-on status clear setting. The returned parameter is "0" (`*PSC 0`) or "1" (`*PSC 1`).

***SRE** <*enable value*>
Enable bits in the Status Byte enable register.

***SRE?**
Query the Status Byte Enable register. The power supply returns a decimal value which corresponds to the binary-weighted sum of all bits set in the enable register.

***STB?**
Query the Status Byte summary register. The `*STB?` command is similar to a serial poll but it is processed like any other instrument command. The `*STB?` command returns the same result as a serial poll but the "Request Service" bit (bit 6) is not cleared if a serial poll has occurred.

***WAI**
Instruct the power supply to wait for all pending operations to complete before executing any additional commands over the interface. Used only in the triggered mode.

An Introduction to the SCPI Language

SCPI (*Standard Commands for Programmable Instruments*) is an ASCII-based instrument command language designed for test and measurement instruments. Refer to "Simplified Programming Overview", starting on page 77 for an introduction to the basic techniques used to program the power supply over the remote interface.

SCPI commands are based on a hierarchical structure, also known as a *tree system*. In this system, associated commands are grouped together under a common node or root, thus forming *subsystems*. A portion of the `SOURce` subsystem is shown below to illustrate the tree system.

```
[SOURce:]
   CURRent {<current>|MIN|MAX|UP|DOWN}
   CURRent? [MIN|MAX]
   CURRent:
     TRIGgered {<current>|MIN|MAX}
     TRIGgered?{MIN|MAX}
   VOLTage {<voltage>|MIN|MAX|UP|DOWN}
   VOLTage? [MIN|MAX]
   VOLTage:
     TRIGgered {<voltage>|MIN|MAX}
     TRIGgered? {MIN|MAX}
```

`SOURce` is the root keyword of the command, `CURRent` and `VOLTage` are second-level keywords, and `TRIGgered` is third-level keywords. A *colon* (:) separates a command keyword from a lower-level keyword.

Command Format Used in This Manual

The format used to show commands in this manual is shown below:

```
CURRent {<current>|MINimum|MAXimum|UP|DOWN}
```

The command syntax shows most commands (and some parameters) as a mixture of upper- and lower-case letters. The upper-case letters indicate the abbreviated spelling for the command. For shorter program lines, send the abbreviated form. For better program readability, send the long form.

For example, in the above syntax statement, `CURR` and `CURRENT` are both acceptable forms. You can use upper- or lower-case letters. Therefore, `CURRENT`, `curr`, and `Curr` are all acceptable. Other forms, such as `CUR` and `CURREN`, will generate an error.

Braces ({ }) enclose the parameter choices for a given command string. The braces are not sent with the command string.

A *vertical* bar (|) separates multiple parameter choices for a given command string.

Triangle brackets (< >) indicate that you must specify a value for the enclosed parameter. For example, the above syntax statement shows the current parameter enclosed in triangle brackets. The brackets are not sent with the command string. You must specify a value for the parameter (such as "`CURR 0.1`").

Some parameters are enclosed in *square brackets* ([ ]). The brackets indicate that the parameter is optional and can be omitted. The brackets are not sent with the command string. If you do not specify a value for an optional parameter, the power supply chooses a default value.

Some portions of commands are enclosed in square brackets([ ]). The brackets indicate that this portion of the command is optional. Most optional portions of the command are not shown in the command description. For the full command showing all the options, see "SCPI Command Summary", starting on page 71.

A *colon* (:) separates a command keyword from a lower-level keyword. You must insert a blank space to separate a parameter from a command keyword. If a command requires more than one parameter, you must separate adjacent parameter using a comma as shown below:

"`SOURce:CURRent:TRIGgered`"

"`APPLy 3.5,1.5`"

Command Separators

A *colon* (:) is used to separate a command keyword from a lower-level keyword as shown below:

"SOURce:CURRent:TRIGgered"

A semicolon (;) is used to separate two commands within the same subsystem, and can also minimize typing. For example, sending the following command string:

"SOUR:VOLT MIN;CURR MAX"

... is the same as sending the following two commands:

"SOUR:VOLT MIN"

"SOUR:CURR MAX"

Use a colon and a semicolon to link commands from different subsystems. For example, in the following command string, an error is generated if you do not use the colon and semicolon:

"DISP:TEXT:CLE;:SOUR:CURR MIN"

Using the *MIN* and *MAX* Parameters

You can substitute MINimum or MAXimum in place of a parameter for many commands. For example, consider the following command:

CURRent {<*current*>|MIN|MAX}

Instead of selecting a specific current, you can substitute MINimum to set the current to its minimum value or MAXimum to set the current to its maximum value.

Querying Parameter Settings

You can query the value of most parameters by adding a *question mark* (?) to the command. For example, the following command sets the output current to 5 amps:

"CURR 5"

You can query the value by executing:

"CURR?"

You can also query the minimum or maximum value allowed with the present function as follows:

"CURR? MAX"

"CURR? MIN"

Caution

If you send two query commands without reading the response from the first, and then attempt to read the second response, you may receive some data from the first response followed by the complete second response. To avoid this, do not send a query command without reading the response. When you cannot avoid this situation, send a device clear before sending the second query command.

SCPI Command Terminators

A command string sent to the power supply *must* terminate with a <*new line*> character. The IEEE-488 EOI (end-or-identify) message is interpreted as a <*new line*> character and can be used to terminate a command string in place of a <*new line*> character. A <*carriage return*> followed by a <*new line*> is also accepted. Command string termination will always reset the current SCPI command path to the root level. The <*new line*> character has the ASCII decimal code of 10.

IEEE-488.2 Common Commands

The IEEE-488.2 standard defines a set of common commands that perform functions like reset, self-test, and status operations. Common commands always begin with an asterisk (*), are four to five characters in length, and may include one or more parameters. The command keyword is separated from the first parameter by a *blank space*. Use a *semicolon* (;) to separate multiple commands as shown below:

"*RST; *CLS; *ESE 32; *OPC?"

SCPI Parameter Types

The SCPI language defines several different data formats to be used in program messages and response messages.

Numeric Parameters Commands that require numeric parameters will accept all commonly used decimal representations of numbers including optional signs, decimal points, and scientific notation. Special values for numeric parameters like `MINimum`, `MAXimum`, and `DEFault` are also accepted. You can also send engineering unit suffixes (V, A or SEC) with numeric parameters. If only specific numeric values are accepted, the power supply will automatically round the input numeric parameters. The following command uses a numeric parameter:

```
CURR {<current>|MIN|MAX|UP|DOWN}
```

Discrete Parameters Discrete parameters are used to program settings that have a limited number of values (like `BUS`, `IMM`). Query responses will always return the short form in all upper-case letters. The following command uses discrete parameters:

```
TRIG:SOUR {BUS|IMM}
```

Boolean Parameters Boolean parameters represent a single binary condition that is either true or false. For a false condition, the power supply will accept "OFF" or " 0 ". For a true condition, the power supply will accept "ON" or " 1 ". When you query a boolean setting, the power supply will always return " 0 " or " 1 ". The following command uses a boolean parameter:

```
DISP {OFF|ON}
```

String Parameters String parameters can contain virtually any set of ASCII characters. A string must begin and end with matching quotes; either with a single quote or with a double quote. You can include the quote delimiter as part of the string by typing it twice without any characters in between. The following command uses a string parameter:

```
DISP:TEXT <quoted string>
```

Halting an Output in Progress

You can send a device clear at any time to stop an output in progress over the GPIB interface. The status registers, the error queue, and all configuration states are left unchanged when a device clear message is received. Device clear performs the following actions.

- The power supply's input and output buffers are cleared.
- The power supply is prepared to accept a new command string.
- The following statement shows how to send a device clear over the GPIB interface using *Agilent BASIC*.

  "`CLEAR 705`" *IEEE-488 Device Clear*

- The following statement shows how to send a device clear over the GPIB interface using the GPIB Command Library for C or QuickBASIC.

  "`IOCLEAR (705)`"

For RS-232 operation, sending the <Ctrl-C> character will perform the same operation as the IEEE-488 device clear message. The power supply's DTR (data terminal ready) handshake line is set true following a device clear message.

Note *All remote interface configurations can be entered only from the front panel. See ''Remote Interface Configuration'' in chapter 3 to configure for GPIB or RS-232 interface before operating the power supply remotely.*

SCPI Conformance Information

The power supply conforms to the '1996.0' version of the SCPI standard. Many of the commands required by the standard are accepted by the power supply but are not described in this manual for simplicity or clarity. Most of these non-documented commands duplicate the functionality of a command already described in this manual.

SCPI Confirmed Commands

The following table lists the SCPI-confirmed commands that are used by the power supply.

```
DISPlay
  [:WINDow][:STATe] {OFF|ON}
  [:WINDow][:STATe]?
  [:WINDow]:TEXT[:DATA] <quoted string>
  [:WINDow]:TEXT[:DATA]?
  [:WINDow]:TEXT:CLEar

INITiate[:IMMediate]

INSTrument[:SELect] {OUTPut1|OUTPut2|OUT1|OUT2}
  [:SELect]?
  :NSELect {1|2}
  :NSELect?
  :COUPLe
    [:TRIGger] {ON|OFF}
    [:TRIGger]?

MEASure
  :CURRent[:DC]?
  [:VOLTage][:DC]?

OUTPut
  [:STATe] {OFF|ON}
  [:STATE]?
```

SCPI Confirmed Commands *(continued)*

```
[SOURce]
  :CURRent[:LEVel][:IMMediate][:AMPLitude] {<current>|MIN|MAX|UP|DOWN}
  :CURRent[:LEVel][:IMMediate][:AMPLitude]? [MIN|MAX]
  :CURRent[:LEVel][:IMMediate]:STEP[:INCRement] {<numeric value>|DEFault}
  :CURRent[:LEVel][:IMMediate]:STEP[:INCRement]? {DEFault}
  :CURRent[:LEVel]:TRIGgered[:AMPLitude] {<current>|MIN|MAX}
  :CURRent[:LEVel]:TRIGgered[:AMPLitude]?[MIN|MAX]
  :VOLTage[:LEVel][:IMMediate][:AMPLitude] {<voltage>|MIN|MAX|UP|DOWN}
  :VOLTage[:LEVel][:IMMediate][:AMPLitude]?[MIN|MAX]
  :VOLTage[:LEVel][:IMMediate]:STEP[:INCRement] {<numeric value>|DEFault}
  :VOLTage[:LEVel][:IMMediate]:STEP[:INCRement]? {DEFault}
  :VOLTage[:LEVel]:TRIGgered[:AMPLitude] {<voltage>|MIN|MAX}
  :VOLTage[:LEVel]:TRIGgered[:AMPLitude]?[MIN|MAX]
  :VOLTage:PROTection[:LEVel] {<voltage>|MIN|MAX}
  :VOLTage:PROTection[:LEVel]? {MIN|MAX}
  :VOLTage:PROTection:STATe {0|1|OFF|ON}
  :VOLTage:PROTection:STATe?
  :VOLTage:PROTection:TRIPped?
  :VOLTage:PROTection:CLEar
  :VOLTage:RANGe {P8V|P20V|LOW|HIGH}    (E3646A/48A models)
  :VOLTage:RANGe {P35V|P60V|LOW|HIGH}   (E3647A/49A models)
  :VOLTage:RANGe?

STATus
  :QUEStionable[:EVENt]?
  :QUEStionable:ENABle <enable value>
  :QUEStionable:ENABle?
  :QUEStionable:INSTrument[:EVENt]?
  :QUEStionable:INSTrument:ENABle <enable value>
  :QUEStionable:INSTrument:ENABle?
  :QUEStionable:INSTrument:ISUMmary<n>[:EVENt]?
  :QUEStionable:INSTrument:ISUMmary<n>:CONDition?
  :QUEStionable:INSTrument:ISUMmary<n>:ENABle <enable value>
  :QUEStionable:INSTrument:ISUMmary<n>:ENABle?

SYSTem
  :BEEPer[:IMMediate]
  :ERRor?
  :VERSion?

TRIGger
  [:SEQuence]:DELay {<seconds>|MIN|MAX}
  [:SEQuence]:DELay?
  [:SEQuence]:SOURce{BUS|IMM}
  [:SEQuence]:SOURce?
```

Device Specific Commands

The following commands are device-specific to your power supply. They are not included in the '1997.0' version of the SCPI standard. However, these commands are designed with the SCPI standard in mind and they follow all of the command syntax rules defined by the standard.

Non-SCPI Commands

```
APPLy {<voltage>|DEF|MIN|MAX>}[,{<current>|DEF|MIN|MAX}]
APPLy?

CALibration
  :COUNt?
  :CURRent[:DATA] <numeric value>
  :CURRent:LEVel {MIN|MID|MAX}
  :SECure:CODE <new code>
  :SECure:STATe {OFF|ON},<code>
  :SECure:STATe?
  :STRing <quoted string>
  :STRing?
  :VOLTage[:DATA] <numeric value>
  :VOLTage:LEVel {MIN|MID|MAX}
  :VOLTage:PROTection

DISPlay
  [:WINDow]:MODE {VV|II|VI}
  [:WINDow]:MODE?

OUTPut
  :RELay[:STATe] {OFF|ON}
  :RELay[:STATE]?
  :TRACk[:STATe] {ON|OFF}
  :TRACk[:STATe]?

SYSTem
  :LOCal
  :REMote
  :RWLock
```

IEEE-488 Conformance Information

Dedicated Hardware Lines

ATN	*Attention*
IFC	*Interface Clear*
REN	*Remote Enable*
SRQ	*Service Request Enable*

Addressed Commands

DCL	*Device Clear*
EOI	*End or Identify*
GET	*Group Execute Trigger*
GTL	*Go To Local*
LLO	*Local Lockout*
SDC	*Selected Device Clear*
SPD	*Serial Poll Disable*
SPE	*Serial Poll Enable*

IEEE-488 Common Commands

```
*CLS
*ESE <enable value>
*ESE?
*ESR?
*IDN?
*OPC
*OPC?
*PSC {0|1}
*PSC?
*RST
*SAV {1|2|3|4|5}
*RCL {1|2|3|4|5}
*SRE <enable value>
*SRE?
*STB?
*TRG
*TST?
*WAI
```

5

Error Messages

Error Messages

Errors are retrieved in first-in-first-out (FIFO) order. The first error returned is the first error that was stored. Errors are cleared as you read them. When you have read all errors from the queue, the **ERROR** annunciator turns off and the errors are cleared. The power supply beeps once each time an error is generated.

If more than 20 errors have occurred, the last error stored in the queue (the most recent error) is replaced with -350, "*Queue overflow*". No additional errors are stored until you remove errors from the queue. If no errors have occurred when you read the error queue, the supply responds with +0, "No error" over the remote interface or "NO ERRORS" from the front panel.

The error queue is cleared by the `*CLS` (clear status) command or when power is cycled. The errors are also cleared when you read the queue.

Note that the `*RST` (reset command) command does not clear the error queue.

- ***Front-panel operation:***

  Press Store/Local (**Local**) key to return to front-panel operation mode if you operate power supply in remote operation mode.

  View ERRORS

  If the **ERROR** annunciator is on, press View to view the errors. Use the knob to scroll through the error numbers. Press > to view the text of the error message. Press > to increase the scrolling speed of the text on the display. All errors are cleared when you exit the menu by pressing the View or let the display time out for about 30 seconds.

- ***Remote interface operation:***

  `SYSTem:ERRor?` *Read and clear one error from the error queue*

  Errors have the following format (the error string may contain up to 80 characters).

  `-102, "Syntax error"`

Execution Errors

-101 **Invalid character**

An invalid character was found in the command string. You may have inserted a character such as #, $, or % in the command keyword or within a parameter.

Example: `OUTP:STAT #ON`

-102 **Syntax error**

Invalid syntax was found in the command string. You may have inserted a blank space before or after a colon in the command header, or before a comma.

Example: `VOLT:LEV  ,1`

-103 **Invalid separator**

An invalid separator was found in the command string. You may have used a comma instead of a colon, semicolon, or blank space - or you may have used a blank space instead of a comma.

Example: `TRIG:SOUR,BUS or APPL 1.0 1.0`

-104 **Data type error**

The wrong parameter type was found in the command string. You may have specified a number where a string was expected, or vice versa.

-105 **GET not allowed**

A Group Execute Trigger (GET) is not allowed within a command string.

-108 **Parameter not allowed**

More parameters were received than expected for the command. You may have entered an extra parameter, or you added a parameter to a command that does not accept a parameter.

Example: `APPL? 10`

-109 **Missing parameter**

Fewer parameters were received than expected for the command. You omitted one or more parameters that are required for this command.

Example: `APPL`

-112 **Program mnemonic too long**

A command header was received which contained more than the maximum 12 characters allowed.

-113 **Undefined header**

A command was received that is not valid for this power supply. You may have misspelled the command or it may not be a valid command. If you are using the short form of the command, remember that it may contain up to four letters.

Example: `TRIGG:DEL 3`

-121 **Invalid character in number**

An invalid character was found in the number specified for a parameter value.

Example: `*ESE #B01010102`

-123 **Numeric overflow**

A numeric parameter was found whose exponent was larger than 32,000.

-124 **Too many digits**

A numeric parameter was found whose mantissa contained more than 255 digits, excluding leading zeros.

-128 **Numeric data not allowed**

A numeric parameter was received but a character string was expected.

Example: `DISP:TEXT 123`

-131 **Invalid suffix**

A suffix was incorrectly specified for a numeric parameter. You may have misspelled the suffix.

Example: `TRIG:DEL 0.5 SECS`

-134 **Suffix too long**

A suffix for a numeric parameter contained too many characters.

-138 **Suffix not allowed**

A suffix was received following a numeric parameter which does not accept a suffix.

Example: `STAT:QUES:ENAB 18 SEC` (SEC is not a valid suffix).

-141 **Invalid character data**

Either the character data element contained an invalid character or the particular element received was not valid for the header.

-144 **Character data too long**

The character data element contained too many characters.

-148 **Character data not allowed**

A discrete parameter was received but a character string or a numeric parameter was expected. Check the list of parameters to verify that you have used a valid parameter type.

Example: `DISP:TEXT ON`

-151 **Invalid string data**

An invalid character string was received. Check to see if you have enclosed the character string in single or double quotes.

Example: `DISP:TEXT 'ON`

-158 **String data not allowed**

A character string was received but is not allowed for the command. Check the list of parameters to verify that you have used a valid parameter type.

Example: `TRIG:DEL` '*zero*'

-160 to -168 **Block data errors**

The power supply does not accept block data.

-170 to -178 **Expression errors**

The power supply does not accept mathematical expressions.

-211 **Trigger ignored**

A Group Execute Trigger (GET) or `*TRG` was received but the trigger was ignored. Make sure that the trigger source should be selected to the bus and the trigger subsystem should be initiated by `INIT[:IMM]` command.

-213 **Init ignored**

An `INITiate` command was received but could not be executed because a measurement was already in progress. Send a device clear to halt a measurement in progress and place the power supply in the "idle" state.

-221 **Settings conflict**

Indicates that a legal program data element was parsed but could not be executed due to the current device state.

-222 **Data out of range**

A numeric parameter value is outside the valid range for the command.

Example: `TRIG:DEL -3`

-223 **Too much data**

A character string was received but could not be executed because the string length was more than 40 characters. This error can be generated by the `CALibration:STRing` command.

-224 **Illegal parameter value**

A discrete parameter was received which was not a valid choice for the command. You may have used an invalid parameter choice.

Example: `DISP:STAT XYZ` (XYZ is not a valid choice).

-330 **Self-test failed**

The power supply's complete self-test failed from the remote interface (`*TST?` command). In addition to this error, more specific self-test errors are also reported. *See also "Self-Test Errors", starting on page 129.*

-350 **Queue overflow**

The error queue is full because more than 20 errors have occurred. No additional errors are stored until you remove errors from the queue. The error queue is cleared when power has been off, or after a `*CLS` (clear status) command has been executed.

-410 **Query INTERRUPTED**

A command was received which sends data to the output buffer, but the output buffer contained data from a previous command (the previous data is not overwritten). The output buffer is cleared when power has been off, or after a `*RST` (reset) command has been executed.

-420 **Query UNTERMINATED**

The power supply was addressed to talk (i.e., to send data over the interface) but a command has not been received which sends data to the output buffer. For example, you may have executed an `APPLy` command (which does not generate data) and then attempted an `ENTER` statement to read data from the remote interface.

-430 **Query DEADLOCKED**

A command was received which generates too much data to fit in the output buffer and the input buffer is also full. Command execution continues but all data is lost.

-440 **Query UNTERMINATED after indefinite response**

The `*IDN?` command must be the last query command within a command string.

Example: `*IDN?;:SYST:VERS?`

501 **Isolator UART framing error**

502 **Isolator UART overrun error**

511 **RS-232 framing error**

512 **RS-232 overrun error**

513 **RS-232 parity error**

514 **Command allowed only with RS-232**

There are three commands which are only allowed with the RS-232 interface: `SYSTem:LOCal`, `SYSTem:REMote`, and `SYSTem:RWLock`.

521 **Input buffer overflow**

522 **Output buffer overflow**

550 **Command not allowed in local**

You should always execute the `SYSTem:REMote` command before sending other commands over the RS-232 interface.

800 **Outputs coupled by track system**

This error occurs when coupling the outputs if the track mode is already enabled. Tracking mode should be disabled first when coupling the outputs.

801 **Outputs coupled by trigger subsystem**

This error occurs when enabling the track mode if the outputs are already coupled. Outputs should be uncoupled first to enable the power supply to operate in the track mode.

Self-Test Errors

The following errors indicate failures that may occur during a self-test. Refer to the *Service Information* for more information.

601 **Front panel does not respond**

602 **RAM read/write failed**

603 **A/D sync stuck**

604 **A/D slope convergence failed**

605 **Cannot calibrate rundown gain**

606 **Rundown gain out of range**

607 **Rundown too noisy**

608 **Serial configuration readback failed**

624 **Unable to sense line frequency**

625 **I/O processor does not respond**

626 **I/O processor failed self-test**

630 **Fan test failed**

631 **System DAC test failed**

632 **Output1 hardware test failed**

633 **Output2 hardware test failed**

Calibration Errors

The following errors indicate failures that may occur during a calibration. Refer to the *Service Information* for more information.

701 **Cal security disabled by jumper**
The calibration security feature has been disabled with a jumper inside the power supply. When applicable, this error will occur at power-on to warn you that the power supply is unsecured.

702 **Cal secured**
The power supply is secured against calibration.

703 **Invalid secure code**
An invalid calibration security code was received when attempting to unsecure or secure the power supply. You must use the same security code to unsecure the power supply as was used to secure it, and vice versa. The security code may contain up to 11 alphanumeric characters.

704 **Secure code too long**
A security code was received which contained more than 12 characters.

705 **Cal aborted**
A calibration in progress is aborted when you press any front-panel key, send a device clear, or change the local/remote state of the instrument.

706 **Cal value out of range**
The specified calibration value (`CALibration:VALue`) is not valid for the present measurement function and range.

708 **Cal output disabled**
Calibration is aborted by sending `OUTP OFF` command during calibrating a output.

712 **Bad DAC cal data**
The specified DAC calibration values (`CAL:VOLT` or `CAL:CURR`) are out of range. Note that the new calibration constants are not stored in the non-volatile memory.

713 **Bad readback cal data**
The specified readback calibration values (`CAL:VOLT` or `CAL:CURR`) are out of range. Note that the new calibration constants are not stored in the non-volatile memory.

714 **Bad OVP cal data**
The overvoltage protection calibration constant is out of range. Note that the new calibration constants are not stored in the non-volatile memory.

717 **Cal OVP status enabled**
Overvoltage protection status is enabled. You must set overvoltage to OFF before and during the calibration.

718 **Gain out of range for Gain Error Correction**
The slope of the DAC gain is out of range. Hardware fails.

740 **Cal checksum failed, secure state**

741 **Cal checksum failed, string data**

743 **Cal checksum failed, store/recall data in location 1**

744 **Cal checksum failed, store/recall data in location 2**

745 **Cal checksum failed, store/recall data in location 3**

746 **Cal checksum failed, DAC cal constants**

747 **Cal checksum failed, readback cal constants**

748 **Cal checksum failed, GPIB address**

749 **Cal checksum failed, internal data**

754 **Cal checksum failed, store/recall data in location 4**

755 **Cal checksum failed, store/recall data in location 5**

6

Application Programs

Application Programs

This chapter contains two application programs that utilize the remote interface. These examples will help you develop programs for your own application. Chapter 4 "Remote Interface Reference" starting on page 69 lists the syntax for the SCPI (Standard Commands for Programmable Instruments) commands available to program the power supply.

The examples in this chapter have been tested on a PC running Windows® 3.1, Windows® 95 or Windows® NT 4.0. The examples are written for use over GPIB (IEEE 488) or RS-232. But the examples for use over the RS-232 interface do not work with Windows 3.1. These examples require a VISA (Virtual Instrument Software Architecture) driver for use with your GPIB interface card in your PC. You should have the "**visa.dll**" for Windows® 3.1 or "**visa32.dll**" for Windows® 95 or Windows® NT 4.0 in your *c:\windows\system* directory to have the examples in this chapter run properly. The examples step through voltages and make corresponding current readings to characterize a power diode.

Example Program for C and C++

The following C programming example shows you how to send and receive formatted I/O. This example programming shows you how to use the SCPI commands for the instrument with the VISA functionality and does include error trapping. For more information on non-formatted I/O and error trapping, refer to the Agilent Technologies VISA *User's Guide*.

The following C programming example was written in Microsoft® Visual C++ version 1.52 using project type "QuickWin application", and using the large memory model and C++ version 4.x or 5.0 using project type "Windows 32 application". Be sure to move the "**visa.lib** (Windows® 3.1) or visa32.lib (Windows® 95/NT)" and "**visa.h**" file to the lib and include development directory. These are usually found in the *c:\vxipnp\win(win95* or *winnt)\lib\msc* or *c:\vxipnp\win (win95* or *winnt)\include* directory.

Diode.c

```
/*Diode.C
This example program steps the power supply through 11 voltages and measures the current
response. It prints the voltage step and the current response as a table. Note that the
GPIB address is the default address from the factory for the power supply.*/

#include <visa.h>
#include <stdio.h>
#include <string.h>
#include <time.h>
#include <conio.h>
#include <stdlib.h>

ViSession    defaultRM;       /* Resource manager id                              */
ViSession    power_supply;    /* Identifies power supply                          */
int     bGPIB = 1;            /* Set the number to 0 for use with the RS-232     */
long    ErrorStatus;          /* VISA Error code                                   */
char    commandString[256];
char    ReadBuffer[256];

void    delay(clock_t wait);
void    SendSCPI(char* pString);
void    CheckError(char* pMessage);
void    OpenPort();

void main()
{
    double    voltage;          /* Value of voltage sent to power supply          */
    char      Buffer[256];      /* String returned from power supply              */
    double    current;          /* Value of current output of power supply        */
```

Continued on next page

```
    OpenPort();

    /* Query the power supply id, read response and print it */
    sprintf(Buffer,"*IDN?");
    SendSCPI(Buffer);
    printf("Instrument identification string:\n       %s\n\n",Buffer);

    SendSCPI("*RST");                /* Set power-on condition            */
    SendSCPI("Current 2");           /* Set current limit to 2A           */
    SendSCPI("Output on");           /* Turn output on                    */

    printf("Voltage         Current\n\n");          /* Print heading      */

    /*Step from 0.6 to 0.8 volt in 0.02 steps */
    for(voltage = 0.6; voltage <=0.8001; voltage +=0.02)
    {
        printf("%.3f",voltage);       /* Display diode voltage*/
        /* Set output voltage */
        ErrorStatus = viPrintf(power_supply,"Volt %f\n",voltage);
        if(!bGPIB)
            delay(500);/* 500 msec wating for RS-232 port*/
        CheckError("Unable to set voltage");
        /* Measure output current */
        ErrorStatus = viPrintf(power_supply,"Measure:Current?\n");
        CheckError("Unable to write device");
        delay(500);                   /* Allow output to wait for 500 msec */
        /* Retrieve reading */
        ErrorStatus = viScanf(power_supply,"%lf",&current);
        CheckError("Unable to read voltage");
        printf("%6.4f\n",current);    /* Display diode current */
    }
    SendSCPI("Output off");          /* Turn output off  */
    ClosePort();
}

/* Build the address required to open commnuication with GPIB card or RS-232.*/
/* The address format looks like this: "GPIB0::5::INSTR".                */
/* To use the RS-232 interface using COM1 port, change it to "ASRL1::INSTR"   */
/* address format */

void OpenPort()
{
    char    GPIB_Address[3];
    char    COM_Address[2];
    char    VISA_address[40];         /* Complete VISA address sent to card  */

    if(bGPIB)
        strcpy(GPIB_Address,"5");     /* Select GPIB address between 0 to 30*/
    else
        strcpy(COM_Address,"1");      /* Set the number to 2 for COM2 port */
```

Continued on next page

```
    if(bGPIB){  /* For use with GPIB 7 address, use "GPIB::7::INSTR" address format */
        strcpy(VISA_address,"GPIB::");
        strcat(VISA_address,GPIB_Address);
        strcat(VISA_address,"::INSTR");
    }
    else{   /* For use with COM2 port, use "ASRL2::INSTR" address format       */
        strcpy(VISA_address,"ASRL");
        strcat(VISA_address,COM_Address);
        strcat(VISA_address,"::INSTR");
    }

    /* Open communication session with the power supply */
    ErrorStatus = viOpenDefaultRM(&defaultRM);
    ErrorStatus = viOpen(defaultRM,VISA_address,0,0,&power_supply);
    CheckError("Unable to open port");

    if(!bGPIB)
        SendSCPI("System:Remote");
}

void    SendSCPI(char* pString)
{
    char* pdest;

    strcpy(commandString,pString);
    strcat(commandString,"\n");
    ErrorStatus = viPrintf(power_supply,commandString);
    CheckError("Can't Write to Driver");
    if (bGPIB == 0)
        delay(1000);                    /* Unit is milliseconds */

    pdest = strchr(commandString, '?');  /* Search for query command   */
    if( pdest != NULL ){
        ErrorStatus = viScanf(power_supply,"%s",&ReadBuffer);
        CheckError("Can't Read From Driver");
        strcpy(pString,ReadBuffer);
    }
}

void  ClosePort()
{
    /* Close the communication port */
    viClose(power_supply);
    viClose(defaultRM);
}
```

Continued on next page

```
void CheckError(char* pMessage)
{
   if (ErrorStatus < VI_SUCCESS){
       printf("\n %s",pMessage);
       ClosePort();
       exit(0);
   }
}

void delay(clock_t wait)
{
   clock_t goal;
   goal = wait + clock();
   while( goal > clock() ) ;
}
```

End of Program

Example Program for Excel 97

This section contains the example program written using Excel Macros (*Visual Basic® for Applications*) to control your power supply. With Excel you can take the value of a cell in a spread sheet, send it to the power supply, and then record the response on the worksheet. The example on the following pages characterizes a component across the terminals of the power supply. This example reads 11 voltages from a worksheet, programs the power supply to that voltage, and then reads the current. The value of current is recorded next to the voltage on the spread sheet.

Example program result

The following table shows the result of the example program starting on page 141 for characterizing a diode. (Agilent Part number: 1901-1214, Manufacturer Part number: MUR160, Motorola® Co.)

	A	B
1		
2	Diode	
3		
4	Voltage	Current
5	0,6	0,00677
6	0,62	0,01072
7	0,64	0,01591
8	0,66	0,02267
9	0,68	0,03158
10	0,7	0,04313
11	0,72	0,05803
12	0,74	0,07690
13	0,76	0,09988
14	0,78	0,12933
15	0,8	0,16578

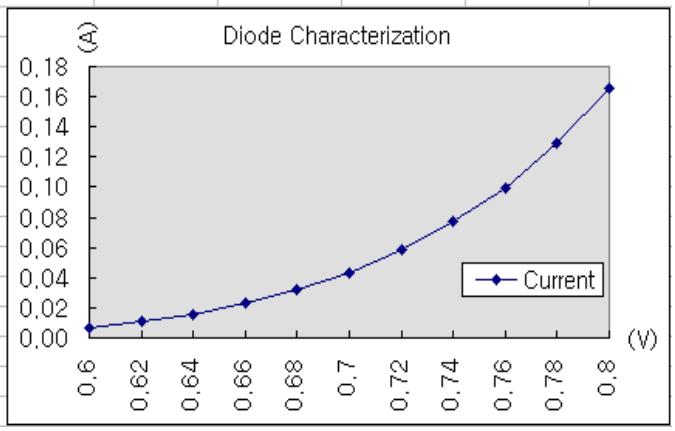

To write an Excel macro you must first open a module in Excel. Go to the *View* menu, choose *Toolbars*, and then select *Control Toolbox*. The *Control Toolbox* dialog box appears. Select the *Command button* in the dialog box. Click cell A1 and drag across the cell B3. The "*CommandButton1*" box is created. To change the button name, click the right mouse button on that button and then select Properties. The *Properties* dialog box appears. In the *Properties* dialog, change the "(name)" and "caption" to "Diode". To try the example for characterizing a diode, type "Voltages" in cell A4 and "Current" in cell B4. In cell A5 type 0.6. Fill in the cells A5 to A15 in 0.02 increments so that cell A15 contains 0.8.

To enter the "Diode" macro example in this section, go to the *View* menu, choose *Toolbars*, and then *Visual Basic Editor* icon. The "*Code window*" appears. Then type the text as shown on page 139 into the "*[Moudle1 (code)]*" window. To enter the declaration for Windows® 95/NT, go to the *Insert* menu, choose *Module*. The "*Module window*" appears. Then type the text as shown starting on page 141. This module will configure all of the overhead required to communicate with the power supply over the interface. Choose the preferred interface by setting "bGPIB=" to "True" or "False" and change the GPIB address or RS-232 port in the routine "OpenPort( )" contained in the module.

To run the macro, return back to the *Excel* window and select the *Run Macro* button in the dialog box and choose the macro name, and then click on the *Run* button . The power supply will reset to power on condition and then step through the voltages in the worksheet. After each step the current is measured, and recorded in the worksheet.

Make any changes necessary to suit your application in the "Diode" module. You must enter the information in the modules exactly as shown or error will be generated. If several system errors occur while attempting to run a macro, you may have to reboot your PC to get the GPIB port or RS-232 port to work properly.

N o t e

To use the example with Window® 3.1, you will need to modify the declarations at the top of the module. Change 'visa32.dll' to 'visa.dll' in all declarations.

Diode Macro

```
'''''''''''''''''''''''''''''''''''''''''''''''''''''''''''''''''''''''''''''''''''''
' This is the subroutine first executed. Modify this routine to suit
' your needs. To change the GPIB address, go to the module OpenPort, and
' change the variable GPIB_Address = "5" to the required GPIB address.
' To change the RS-232 port, go to the moudle OpenPort, and change the
' variable COM_Address = "1" to the required port
'''''''''''''''''''''''''''''''''''''''''''''''''''''''''''''''''''''''''''''''''''''
Global defaultRM As Long    ' Resource manager id for VISA GPIB
Global power_supply As Long ' Identifies power supply
Global bGPIB As Boolean     ' A flag using of GPIB or RS-232
Global ErrorStatus As Long  ' VISA Error code

Sub Diode_Click()
    Range("B5:B15").ClearContents
    Dim I As Integer
    bGPIB = True           ' To use RS-232, set the bGPIB to False
    OpenPort
    SendSCPI "*RST"        ' Set power-on condition
    SendSCPI "Output on"   ' Turn on the output
    For I = 5 To 15
        SendSCPI "Volt " & Str$(Cells(I, 1))
        Cells(I, 2) = Val(SendSCPI("Meas:Current?"))
    Next I
    SendSCPI "Output off"  ' Turn off the output
    ClosePort
End Sub

Private Function OpenPort()
    Dim GPIB_Address As String
    Dim COM_Address As String

    If bGPIB Then
        GPIB_Address = "5"    ' Select GPIB address between 0 to 30
    Else
        COM_Address = "1"     ' Set the number to 2 for COM2 port
    End If
    ErrorStatus = viOpenDefaultRM(defaultRM)    ' Open the VISA session
    If bGPIB Then
        ErrorStatus = viOpen(defaultRM, "GPIB0::" & GPIB_Address & "::INSTR", _
                        0, 1000, power_supply)
    Else
        ErrorStatus = viOpen(defaultRM, "ASRL" & COM_Address & "::INSTR", _
                        0, 1000, power_supply)
        SendSCPI "System:Remote"
    End If
    CheckError "Unable to open port"
End Function
```

Continued on next page

```
'*******************************************************************************
' This routine send a SCPI command string to the GPIB port or RS-232 port.
' If the command contains a question mark, the response is read, and returned
'*******************************************************************************
Private Function SendSCPI(command As String) As string
    Dim commandString  As String       ' Command passed to power supply
    Dim ReturnString As String         ' Store the string returned
    Dim crlfpos As Integer             ' Location of any nul's in Read Buffer
    Dim ReadBuffer As String * 512     ' Buffer used for returned string
    Dim actual As Long                 ' Number of characters sent/returned
    commandString = command & Chr$(10)   ' The instrumented by linefeed
    ErrorStatus = viWrite(power_supply, ByVal commandString, Len(commandString), _
                          actual)
    CheckError "Can't Write to Device"
    If bGPIB = False Then
        delay 0.5
    End If
    If InStr(commandString, "?") Then
        ErrorStatus = viRead(power_supply, ByVal ReadBuffer, 512, actual)
        CheckError "Can't Read From Device"
        ReturnString = ReadBuffer
        crlfpos = InStr(ReturnString, Chr$(0))
        If crlfpos Then
            ReturnString = Left(ReturnString, crlfpos - 1)
        End If
        SendSCPI = ReturnString
    End If
End Function

Private Function ClosePort()
    ErrorStatus = viClose(power_supply)
    ErrorStatus = viClose(defaultRM)
End Function

Private Function delay(delay_time As Single)
    Dim Finish As Single
    Finish = Timer + delay_time
    Do
    Loop Until Finish <= Timer
End Function

Private Function CheckError(ErrorMessage As String)
    If ErrorStatus < VI_SUCCESS Then
        Cells(5, 2) = ErrorMessage
        ClosePort
        End
    End If
End Function
```

End of Program

Declaration for Windows 3.1

```
'*******************************************************************************
' This routine requires the file VISA.dll. It typically resides in the
' c:\windows\system directory. Additional declations for VISA.DLL are usally in file
' visa.bas under c:\vxipnp\win31\include directory on your PC. This routine uses the
' VTL Library to send commands to an instrument. A description of these and additional
' VTL commands are contained in the Agilent Technologies Visa Transition Library book
' Agilent Part Number E2094-90002.
'*******************************************************************************
Declare Function viOpenDefaultRM Lib "VISA.DLL" Alias "#141" (viDefaultRM As Long) As Long

Declare Function viOpen Lib "VISA.DLL" Alias "#131" (ByVal viDefaultRM As Long, ByVal viDesc
As String, ByVal mode As Long, ByVal timeout As Long, vi As Long) As Long

Declare Function viClose Lib "VISA.DLL" Alias "#132" (ByVal vi As Long) As Long

Declare Function viRead Lib "VISA.DLL" Alias "#256" (ByVal vi As Long, ByVal Buffer As
String, ByVal count As Long, retCount As Long) As Long

Declare Function viWrite Lib "VISA.DLL" Alias "#257" (ByVal vi As Long, ByVal Buffer As
String, ByVal count As Long, retCount As Long) As Long

Declare Function viClear Lib "VISA.DLL" Alias "#260" (ByVal vi As Long) As Long
```

Declaration for Windows 95/NT 4.0

```
'*******************************************************************************
' Additional declations for VISA32.DLL are usally in file visa32.bas under
' c:\vxipnp\win95(or winNT)\include directory on your PC. Also see the VISA manual
'*******************************************************************************
Declare Function viOpenDefaultRM Lib "visa32.dll" (instrumentHandle As Long) As Long
Declare Function viOpen Lib "visa32.dll" (ByVal instrumentHandle As Long, _
    ByVal viDesc As String, ByVal mode As Long, ByVal timeout As Long, _
    vi As Long) As Long
Declare Function viClose Lib "visa32.dll" (ByVal vi As Long) As Long
Declare Function viWrite Lib "visa32.dll" (ByVal vi As Long, ByVal Buffer As String, _
    ByVal count As Long, retCount As Long) As Long
Declare Function viRead Lib "visa32.dll" (ByVal vi As Long, ByVal Buffer As String, _
    ByVal count As Long, retCount As Long) As Long
```

Tutorial

Tutorial

This chapter describes basic operation of linear power supply and operation of this power supply. You will also find information to help you better understand output characteristics of this power supply as well as an ideal power supply. This chapter is divided into the following sections:

- Overview of this Power Supply Operation, on page 147
- Output Characteristics, on page 149
- Extending the Voltage and Current Range, on page 153
- Remote Programming, on page 154

Overview of this Power Supply Operation

The basic design model for power supplies consists of placing a control element in series with the rectifier and load device. Figure 7-1 shows a simplified schematic of a series regulated supply with the phase-controlled pre-regulator described as a power switch and the series element depicted as a variable resistor. The phase-controlled pre-regulator minimizes the power dissipated at the series element by maintaining the voltage drop across the series element at a low and constant. Feedback control circuits continuously monitor the output and adjust the series resistance to maintain a constant output voltage. Because the variable resistance of Figure 7-1 is actually one or more power transistor operating in the *linear* (class A) mode, supplies with this type of regulator are often called linear power supplies. Linear power supplies have many advantages and usually provide the simplest most effective means of satisfying high performance and low power requirements.

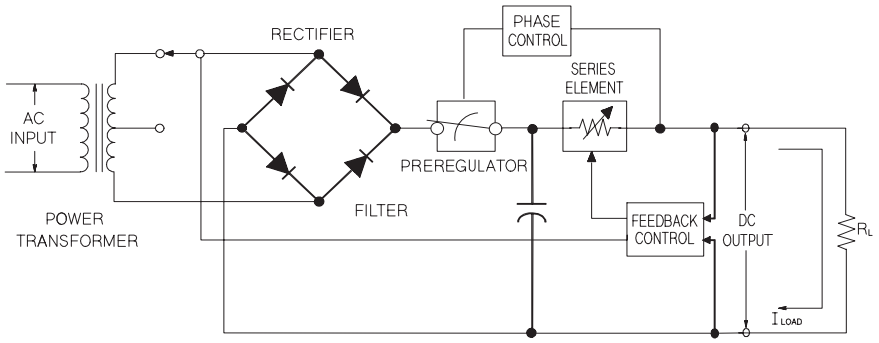

Figure 7-1. Diagram of Simple Series Power Supply

This power supply has two ranges, allowing more voltage at a lower current or more current at a lower voltage. Single range supplies can only output maximum power at full scale voltages and full scale current. This supply can provide output power that is close to maximum at full scale for both ranges. The pre-regulator in this power supply uses solid state transformer tap switches on the secondary winding of the power transformer. This technique is very effective in reducing the power dissipated in the series element.

In terms of performance, a linear regulated supply has a very precise regulating properties and responds quickly to variations of the line and load. Hence, its line and load regulation and transient recovery time are superior to supplies using other regulation techniques. The power supply also exhibits low ripple and noise, is tolerant of ambient temperature changes, and with its circuit simplicity, has a high reliability.

This power supply contains a linear regulated power supply. It is controlled by a control circuit that provides voltages to program the outputs. The power supply sends back to the control circuits a voltage representing the output at the terminals. The control circuits receive information from the front panel and send information to the display. Similarly the control circuits "talk" to the remote interface for input and output with the GPIB and RS-232 interfaces. The remote interface is at earth ground and optically isolated from the control circuit and the power supply.

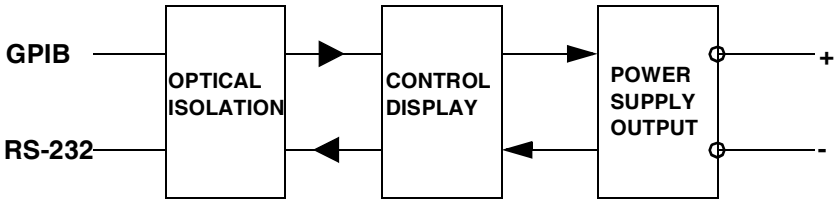

Figure 7-2. Block Diagram of the Power Supply Showing the Optical Isolation

Output Characteristics

An ideal constant-voltage power supply would have a zero output impedance at all frequencies. Thus, as shown in Figure 7-3, the voltage would remain perfectly constant in spite of any changes in output current demanded by the load.

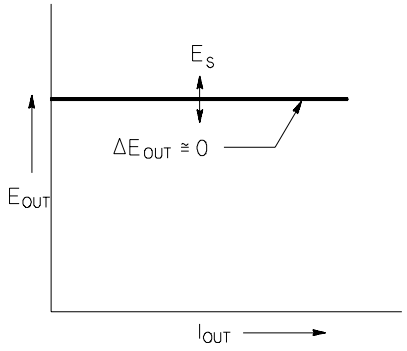

Figure 7-3. Ideal Constant Voltage Power Supply

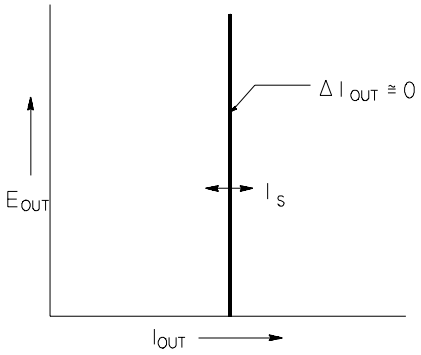

Figure 7-4. Ideal Constant Current Power Supply

The ideal constant-current power supply exhibits an infinite output impedance at all frequencies. Thus as Figure 7-4 indicates, the ideal constant-current power supply would accommodate a load resistance change by altering its output voltage by just the amount necessary to maintain its output current at a constant value.

The output of this power supply can operate in either constant-voltage (CV) mode or constant-current (CC) mode. Under certain fault conditions, the power supply can not operate in either CV or CC mode and becomes unregulated.

Figure 7-5 shows the operating modes of the output of this power supply. The operating point of one supply will be either above or below the line $R_L = R_C$. This line represents a load where the output voltage and the output current are equal to the voltage and current setting. When the load R_L is greater than R_C, the output voltage will dominate since the current will be less then the current setting. The power supply is said to be in constant voltage mode. The load at point 1 has a relatively high resistance value (compared to R_C), the output voltage is at the voltage setting, and the output current is less than the current setting. In this case the power supply is in the constant voltage mode and the current setting acts as a current limit.

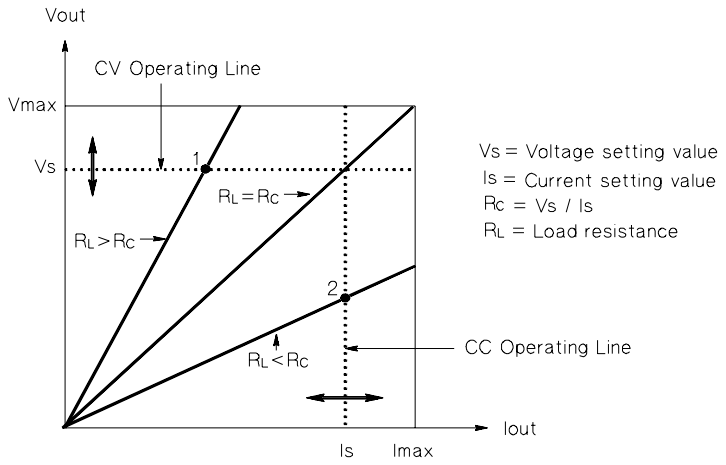

Figure 7-5. Output Characteristics

When the load R_L is less than R_C, the output current will dominate since the voltage will be less than the set voltage. The power supply is said to be in constant current mode. The load at point 2 has a relatively low resistance, the output voltage is less than the voltage setting, the output current is at the current setting. The supply is in constant current mode and the voltage setting acts as a voltage limit.

Unregulated State

If the power supply should go into a mode of operation that is neither CV or CC, the power supply is *unregulated*. In this mode the output is not predictable. The unregulated condition may be the result of the ac line voltage below the specifications. The unregulated condition may occur momentarily. For example when the output is programmed for a large voltage step; the output capacitor or a large capacitive load will charge up at the current limit setting. During the ramp up of the output voltage the power supply will be in the unregulated mode. During the transition from CV to CC as when the output is shorted, the unregulated state may occur briefly during the transition.

Unwanted Signals

An ideal power supply has a perfect dc output with no signals across the terminals or from the terminals to earth ground. The actual power supply has finite noise across the output terminals, and a finite current will flow through any impedance connected from either terminal to earth ground. The first is called *normal mode voltage noise* and the second *common mode current noise*. Figure 7-6 shows the simplified diagram of common mode and normal mode sources of noise.

Normal mode voltage noise is in the form of ripple related to the line frequency plus some random noise. Both of these are of very low value in the power supply. Careful lead layout and keeping the power supply circuitry away from power devices and other noise sources will keep these values low.

Common mode noise can be a problem for very sensitive circuitry that is referenced to earth ground. When a circuit is referenced to earth ground, a low level line—related ac current will flow from the output terminals to earth ground. Any impedance to earth ground will create a voltage drop equal to the current flow multiplied by the impedance. To minimize this effect, the output terminal can be grounded at the output terminal. Alternately, any impedances to earth ground should have a complementary impedance to earth ground to cancel any generated voltages. If the circuit is not referenced to earth ground, common mode power line noise is typically not a problem.

The output will also change due to changes in the load. As the load increases the output current will cause a small drop in the output voltage of the power supply due to the output impedance R. Any resistance in the connecting wire will add to this resistance and increase the voltage drop. Using the largest possible hook up wire will minimize the voltage drop. Using the remote sense leads at the load will compensate for lead resistance in the load leads.

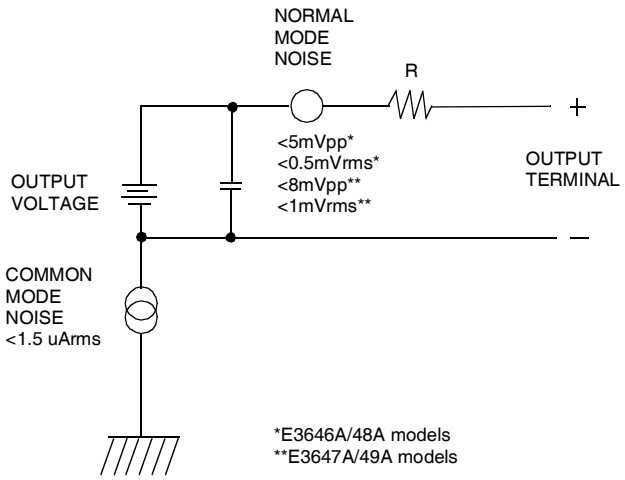

Figure 7-6. Simplified Diagram of Common Mode and Normal Mode Sources of Noise

When the load changes very rapidly, as when a relay contact is closed, the inductance in the hook up wire and in the power supply output will cause a spike to appear at the load. The spike is a function of the rate of change of the load current. When very rapid changes in load are expected, a capacitor with a low series resistance, in parallel with the power supply, and close to the load is the best way to minimize these voltage spikes.

Extending the Voltage and Current Range

The power supply may be able to provide voltages and currents greater than its rated maximum outputs if the power-line voltage is at or above its nominal value. Operation can be extended up to 3% over the rated output without damage to the power supply, but performance can not be guaranteed to meet specifications in this region. If the power-line voltage is maintained in the upper end of the input voltage range, the power supply will probably operate within its specifications. The power supply is more likely to stay within specifications if only one of the voltage or current outputs is exceeded.

Series Connections

Series operation of two or more power supplies can be accomplished up to the output isolation rating of any one supply to obtain a higher voltage than that available from a single supply. Series connected power supplies can be operated with one load across both power supplies or with a separate load for each power supply. The power supply has a reverse polarity diode connected across the output terminals so that if operated in series with other power supplies, damage will not occur if the load is short-circuited or if one power supply is turned on separately from its series partners.

When series connection is used, the output voltage is the sum of the voltages of the individual power supplies. The current is the current of any one power supply. Each of the individual power supplies must be adjusted in order to obtain the total output voltage.

Parallel Connections

Two or more power supplies being capable of CV/CC automatic cross over operation can be connected in parallel to obtain a total output current greater than that available from one power supply. The total output current is the sum of the output currents of the individual power supplies. The output of each power supply can be set separately. The output voltage controls of one power supply should be set to the desired output voltage; the other power supply should be set for a slightly higher output voltage. The supply with the higher output voltage setting will deliver its constant current output, and drop its output voltage until it equals the output of the other supply, and the other supply will remain in constant voltage operation and only deliver that fraction of its rated output current which is necessary to fulfill the total load demand.

Remote Programming

During remote programming a constant-voltage regulated power supply is called upon to change its output voltage rapidly. The most important factor limiting the speed of output voltage change is the output capacitor and load resistor.

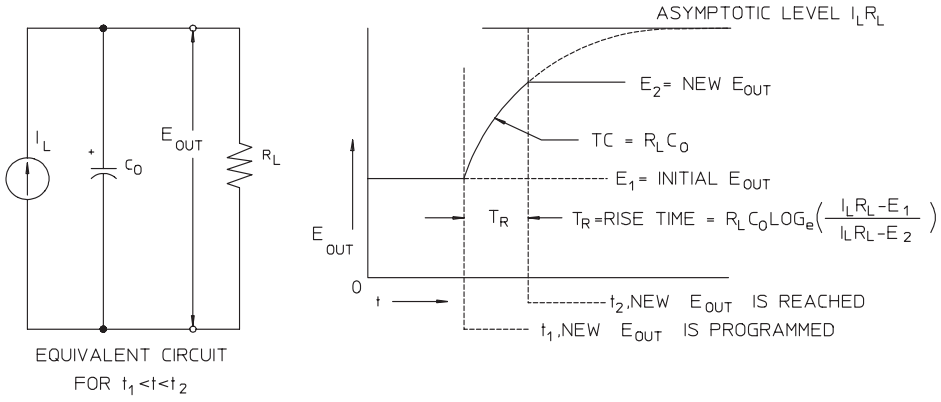

Figure 7-7. Speed of Response - Programming Up (Full Load)

The equivalent circuit and the nature of the output voltage waveform when the supply is being programmed upward are shown in Figure 7-8. When the new output is programmed, the power supply regulator circuit senses that the output is less than desired and turns on the series regulator to its maximum value I_L, the current limit or constant current setting.

This constant current I_L charges the output capacitor C_O and load resistor R_L parallel. The output therefore rises exponentially with a time constant $R_L C_L$ towards voltage level $I_L R_L$, a value higher than the new output voltage being programmed.

When this exponential rise reaches the newly programmed voltage level, the constant voltage amplifier resumes its normal regulating action and holds the output constant. Thus, the rise time can be determined approximately using the formula shown in Figure 7-8.

If no load resistor is attached to the power supply output terminal, then the output voltage will rise linearly at a rate of C_O/I_L when programmed upward, and $TR = C_O(E_2 - E_1)/I_L$, the shortest possible up-programming time.

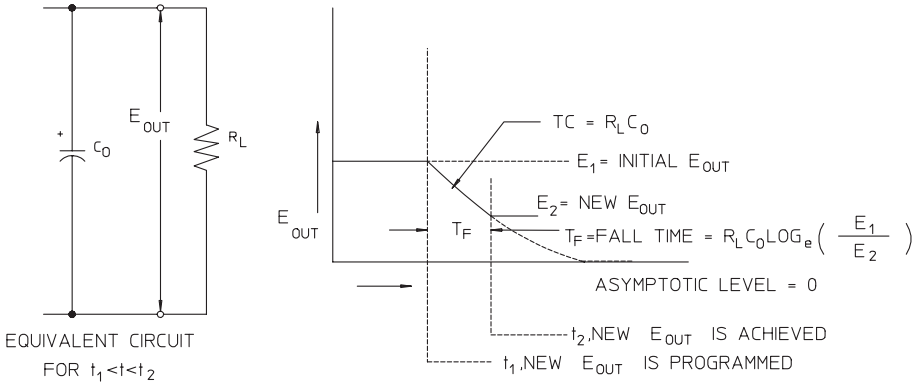

Figure 7-8. Speed of Response - Programming Down

Figure 7-8 shows that when the power supply is programmed down, the regulator senses that the output voltage is higher than desired and turns off the series transistors entirely. Since the control circuit can in no way cause the series regulator transistors to conduct backwards, the output capacitor can only be discharged through the load resistor and internal current source (I_S).

The output voltage decays linearly with slope of I_S/C_O with no load and stops falling when it reaches the new output voltage which has been demanded. If full load is connected, the output voltage will fall exponentially faster.

Since up-programming speed is aided by the conduction of the series regulating transistor, while down programming normally has no active element aiding in the discharge of the output capacitor, laboratory power supplies normally program upward more rapidly than downward.

Specifications

Specifications

The *performance* specifications are listed in the following pages. Specifications are warranted in the temperature range of 0 to 40°C with a resistive load. *Supplemental* characteristics, which are not warranted but are descriptions of performance determined either by design or testing. The *Service Information* contains procedures for verifying the performance specifications.

Performance Specifications

Table 8-1 Performance Specifications

Parameter		E3646A	E3647A	E3648A	E3649A
Output Ratings (@ 0 °C - 40 °C)	Low Range	0 to +8 V/ 0 to 3 A	0 to +35 V/ 0 to 0.8 A	0 to +8 V/ 0 to 5 A	0 to +35 V/ 0 to 1.4 A
	High Range	0 to +20 V/ 0 to 1.5 A	0 to +60 V/ 0 to 0.5 A	0 to +20 V/ 0 to 2.5 A	0 to +60 V/ 0 to 0.8 A
Programming Accuracy[1] 12 months (@ 25 °C ± 5 °C), ±(% of output + offset)	Voltage	<0.05% + 10 mV (<0.1% + 25mV for output 2)			
	Current	<0.2% + 10 mA			
Readback Accuracy[1] 12 months (over GPIB and with respect to actual output (@ 25 °C ± 5 °C), ±(% of output + offset)	Voltage	<0.05% + 5 mV (<0.1% + 25mV for output 2)			
	Current	<0.15% + 5 mA (<0.15% + 10mA for output 2)			
Meter Accuracy[1] [2] 12 months (over front panel with respect to actual output (@ 25 °C ± 5 °C), ±(% of output + offset)	Voltage	< 0.05% + 2 counts (< 0.1% + 4 counts for output 2)			
	Current	<0.15% + 5 mA (<0.15% + 10 mA for output 2)			
Ripple and Noise (with outputs ungrounded, or with either output terminal grounded, 20 Hz to 20 MHz)	Normal mode voltage	<0.5 mVrms and 5 mVp-p	<1 mVrms and 8 mVp-p	<0.5 mV rms and 5 mVp-p	<1 mVrms and 8 mVp-p
	Normal mode current	<4 mA rms			
	Common mode current	<1.5 uA rms			
Load Regulation, ±(% of output + offset)	Voltage	<0.01% + 3 mV			
	Current	<0.01% + 250 uA			
Line Regulation, ±(% of output + offset)	Voltage	<0.01% + 3 mV			
	Current	<0.01% + 250 uA			
Programming Resolution	Voltage	<5 mV			
	Current	<1 mA			

[1] Accuracy specifications are after an 1-hour warm-up with no load and calibration at 25 °C.

[2] Meter accuracy specification is at minimum 10 mV decimal limited by front panel resolution.

Performance Specifications

Parameter		E3646A	E3647A	E3648A	E3649A
Readback Resolution	Voltage	<2 mV			
	Current	<1 mA			
Front Panel Resolution	Voltage	10 mV			
	Current	1 mA			

Transient Response Time

Less than 50 µsec for output to recover to within 15 mV following a change in output current from full load to half load or vice versa

Settling Time

Less than 90 msec for the output voltage to change from 1% to 99% or vice versa following the receipt of `VOLTage` or `APPLy` command via direct GPIB or RS-232 interface.

OVP Accuracy, ±(% of output + offset)

<0.5% + 0.5 V

Activation time: Average time for output to start to drop after OVP condition occurs.

<1.5 msec when the trip voltage is equal or greater than 3 V

<10 msec when the trip voltage is less than 3 V

Supplemental Characteristics

Table 8-2. Supplemental Characteristics

Parameter		E3646A	E3647A	E3648A	E3649A
Output Programming Range (maximum programmable values)	Low Range	0 to +8.24 V/ 0 to 3.09 A	0 to +36.05 V/ 0 to 0.824 A	0 to +8.24 V/ 0 to 5.15 A	0 to +36.05 V/ 0 to 1.442 A
	High Range	0 to +20.6 V/ 0 to 1.545 A	0 to +61.8V/ 0 to 0.515 A	0 to +20.6V/ 0 to 2.575 A	0 to +61.8V/ 0 to 0.824 A
	OVP	1 V to 22 V	1 V to 66 V	1 V to 22 V	1 V to 66 V

Remote Sensing Capability

Voltage drop	Up to 1 V per each lead
Load regulation	Add 5 mV to spec for each 1-volt change in the + output lead due to load current changes.
Load voltage	Subtract voltage drop in load leads from specified output voltage rating.

Temperature Coefficient, ±(% of output + offset)

Maximum change in output/readback per °C after a 30-minute warm-up

Voltage	<0.01% + 3 mV (<0.02% + 5mV for output 2)
Current	<0.02% + 3 mA

Stability, ±(% of output + offset)

Following 30 minutes warm-up, change in output over 8 hours under constant load, line, and ambient temperature.

Voltage	<0.02% + 2 mV
Current	<0.1% + 1 mA

Output Voltage Overshoot

During turn-on or turn-off of ac power, output plus overshoot will not exceed 1 V if the output control is set to less than 1 V. If the output control is set to 1 V or higher, there is no overshoot.

Programming Language

SCPI (Standard Commands for Programmable Instruments)

State Storage Memory

Five (5) user-configurable stored states

Recommended Calibration Interval

1 year

Output Terminal Isolation (maximum, from chassis ground)

±60 Vdc when connecting shorting conductors without insulation between the (+) output and the (+) sense terminals and between the (-) output and the (-) sense terminals.

±240 Vdc when connecting insulated shorting conductors between the (+) output and the (+) sense terminals and between the (-) output and the (-) sense terminals.

AC Input Ratings (selectable via two switches on PC board)

std	115 Vac ± 10%, 47 to 63 Hz
opt 0E3	230 Vac ± 10%, 47 to 63 Hz
opt 0E9	100 Vac ± 10%, 47 to 63 Hz

Maximum Input Power

E3646A	E3647A	E3648A	E3649A
210 VA	210 VA	400 VA	330 VA

Cooling

Fan cooled

Operating Temperature

0 to 40 °C for full rated output.

Storage Temperature

-20 to 70 °C for storage environment.

Environmental Conditions

Designed for indoor use in an installation category II, pollution degree 2 environment. Designed to operate at a maximum relative humidity of 95% and at altitudes of up to 2000 meters.

Weight

	E3646A	E3647A	E3648A	E3649A
Net	8.2 Kg	8.0 Kg	9.2 Kg	9.1 Kg
Shipping	10.1 Kg	9.9 Kg	11.1 Kg	11.0 Kg

Dimensions*

212.8 mmW x 133 mmH x 348.3 mmD

*See below and the next page for more detailed information.

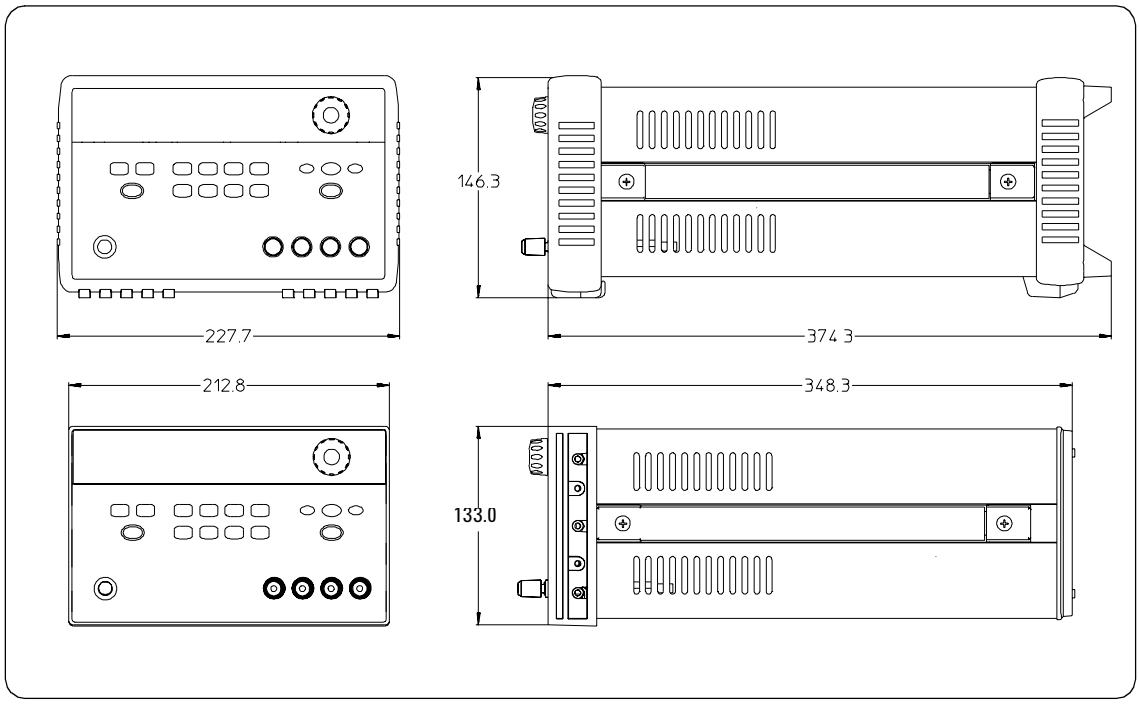

Figure 8-1. Dimensions of Agilent E3646A/47A/48A/49A Power Supply

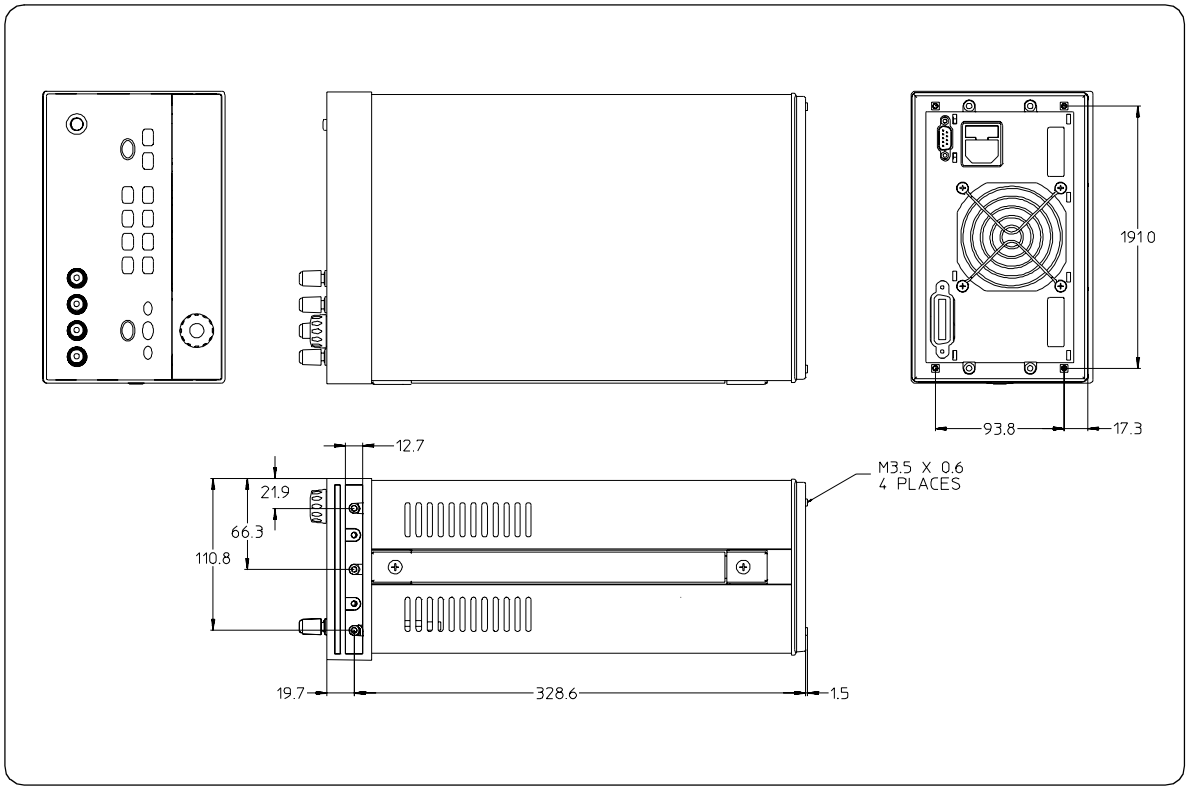

Figure 8-2. Dimensions for Rack mounting

Appendix

Service Information

Service Information

This chapter contains procedures to verify that the power supply is operating normally and is within published specifications (See page 159). The power supply must pass the complete self-test before calibration or any of the verification or performance tests can be performed. If the supply fails any of the tests or if abnormal test results are obtained, refer to the troubleshooting hints in this document. This chapter has three main sections for:

- **Returning a failed power supply to Agilent Technologies for service or repair**
  - Operating Checklist, on page 167
  - Types of Service Available, on page 168
  - Repacking for Shipment, on page 169
  - Electrostatic Discharge (ESD) Precautions, on page 170
  - Surface Mount Repair, on page 170
  - To Replace the Power-Line Fuse, on page 170
  - Troubleshooting Hints, on page 171
  - Self-Test Procedures, starting on page 172
  - General Disassembly, on page 174
- **Verification & performance test procedures and calibration procedure**
  - Recommended Test Equipment, on page 175
  - Test Considerations, on page 176
  - Operation Verification and Performance Tests, on page 176
  - Measurement Techniques, starting on page 177
  - Constant Voltage (CV) Verifications, starting on page 179
  - Constant Current (CC) Verifications, starting on page 185
  - Common Mode Current Noise, on page 189
  - Performance Test Record for Your Power Supply, starting on page 190
  - Calibration Reference, on page 192
  - General Calibration/Adjustment Procedure, starting on page 193
  - Calibration Record for Your Power Supply, starting on page 198
  - Calibration Error Messages, on page 199
- **Schematics**

Operating Checklist

Before returning your power supply to Agilent Technologies for service or repair check the following items:

Is the Power Supply Inoperative?

- ❑ Verify that the ac power cord is connected to the power supply.
- ❑ Verify that the front-panel power switch has been pushed.
- ❑ Verify that the power-line fuse is installed and not open (See page 20):
- ❑ Verify the power-line voltage setting.

  See "If the Power Supply Does Not Turn On" on page 20.

Does the Power Supply Fail Self-Test?

- ❑ Verify that the correct power-line voltage is selected.

  See "If the Power Supply Does Not Turn On" on page 20.
- ❑ Remove all load connections to the power supply.

  Ensure that all terminal connections are removed while the self-test is performed.

Types of Service Available

If your power supply fails within one year of original purchase, Agilent Technologies will repair or replace it free of charge. If your unit fails after your one year warranty expires, Agilent Technologies will repair or replace it as a very competitive price. Agilent will make the decision locally whether to repair or replace your unit.

Standard Repair Service (worldwide)

Contact your nearest Agilent Service Center. They will arrange to have your power supply repaired or replaced.

Express Exchange (U.S.A. only)

You can receive a replacement power supply via overnight shipment for low downtime.

1 **Call 1-800-258-5165 and ask for "Express Exchange."**
   - You will be asked for your shipping address and a credit card number to guarantee return of your failed power supply.
   - If you do not return your failed power supply within 45 days, your credit card will be billed for a new power supply.
   - If you choose not to supply a credit card number, you will be asked to send your failed unit to a designated Agilent Service Center. After the failed unit is received, Agilent will send your replacement unit.

2 **Agilent will immediately send a replacement power supply to you via overnight shipment.**
   - The replacement unit will have a different serial number than your failed unit.
   - If you can not accept a new serial number for the replacement unit, use the Standard Repair Service option described above.
   - If your failed unit was "in-warranty," your replacement unit continues the original one year warranty period. You will not be billed for the replacement unit as long as the failed unit is received by Agilent.
   - If your one year warranty has expired, Agilent will bill you for the power supply exchange price - less than a new unit price. Agilent warrants exchange units against defects for 90 days.

Repacking for Shipment

For the Express Exchange Service described on the previous page, return your failed power supply to the designated Agilent Service Center using the shipping carton of the exchange unit. A shipping label will be supplied. Agilent will notify you when your failed unit has been received.

If the instrument is to be shipped to Agilent for service or repair, be sure to:

- Attach a tag to the power supply identifying the owner and indicating the required service or repair. Include the instrument model number and full serial number.
- Place the power supply in its original container with appropriate packaging material.
- Secure the container with strong tape or metal bands.

If the original shipping container is not available, place your unit in a container which will ensure at least 4 inches of compressible packaging material around all sides for the power supply. Use static-free packaging materials to avoid additional damage to your unit.

Agilent Technologies recommends that you always insure shipments.

Electrostatic Discharge (ESD) Precautions

Almost all electrical components can be damaged by electrostatic discharge (ESD) during handling. Component damage can occur at electrostatic discharge voltages as low as 50 volts.

The following guidelines will help prevent ESD damage when serving the power supply or any electronic device.

- Disassemble instruments only in a static-free work area.
- Use a conductive work area to dissipate static charge.
- Use a conductive wrist strap to dissipate static charge accumulation.
- Minimize handling.
- Keep replacement parts in original static-free packaging.
- Remove all plastic, styrofoam, vinyl, paper, and other static-generating materials from the immediate work area.
- Use only anti-static solder suckers.

Surface Mount Repair

Surface mount components should only be removed using soldering irons or disordering stations expressly designed for surface mount components.

Use of conventional solder removal equipment will almost always result in permanent damage to the printed circuit board and will void your Agilent Technologies factory warranty.

To Replace the Power-Line Fuse

The power-line fuse is located within the power supply's fuse-holder assembly on the rear panel (see page 22). See page 20 to check the rating of power-line fuse and replace with the correct one for your power supply.

Troubleshooting Hints

This section provides a brief check list of common failures. Before troubleshooting or repairing the power supply, make sure that the failure is in the power supply rather than any external connections. Also make sure that the power supply is accurately calibrated. The power supply's circuits allow troubleshooting and repair with basic equipment such as a 6½-digital multimeter.

Unit Reports Errors 740 to 750

These errors may be produced if you accidentally turn off power of the unit during a calibration or while changing a non-volatile state of the instrument. Recalibration or resetting the state should clear the error. If the error persists, a hardware failure may have occurred.

Unit Fails Self-Test

Verify that the correct power-line voltage setting is selected. Also, ensure that all terminal connections are removed while the self-test is performed. Failure of the DAC U20 on the PC board will cause many self-test failures.

Bias Supplies Problems

Check that the input to the voltage regulators of the bias supplies is at least 1 V greater than their output. Circuit failures can cause heavy loads of the bias supplies which may pull down the regulator output voltages. Check the voltages of bias supplies as tabulated below.

Table A-1 Bias Supplies Voltages

Bias Supply	Minimum	Maximum	Check At
+5V Floating	+4.75 V	+5.25 V	U14 pin 2
-5.1V Floating	-4.75 V	-5.25 V	Anode of CR15
+15V Floating	+14.25 V	+15.75 V	Anode of CR139
-15V Floating	-14.25 V	-15.75 V	Cathode of CR140

Some circuits produce their own local bias supplies from the main bias supplies. Be sure to check that these local bias supplies are active. In particular, the ADC (analog-to-digital converter), ac input, and front panel sections have local bias supplies. Always check that the power supplies are free of ac oscillations using an oscilloscope. Failure of bias supplies will cause many self-test failures.

Self-Test Procedures

Power-On Self-Test

Each time the power supply is powered on, a set of self-tests are performed. These tests check that the minimum set of logic and measurement hardware are functioning properly. Failures during the power-on self-test utilize error codes 601 through 604 and 624 through 632.

Complete Self-Test

Hold any front panel key except the "View" key for more than 5 seconds while turning on the power to perform a complete self-test. The power supply beeps when the test starts. The tests are performed in the order shown below.

601 **Front Panel Does not respond** The main controller U17 attempts to establish serial communications with the front panel controller U1 on the front panel board. During this test, the U1 turns on all display segments. Communication must function in both directions for this test to pass. If this error is detected during power-on self-test, the power supply will beep twice. This error is only readable from the remote interface.

602 **RAM read/write failed** This test writes and reads a 55h and AAh checker board pattern to each address of ram U11. Any incorrect readback will cause a test failure. This error is only readable from the remote interface.

603 **A/D sync stuck** The main controller issues an A/D sync pulse to U17 and U16 to latch the value in the ADC slope counters. A failure is detected when a sync interrupt is not recognized and subsequent time-out occurs.

604 **A/D slope convergence failed** The input amplifier is configured to the measure zero (MZ) state in the 10 V range. This test checks whether the ADC integrator produces nominally the same number of positive and negative slope decisions (±10%) during a 20 ms interval.

605 **Cannot calibrate rundown gain** This test checks the nominal gain between integrating ADC and the U17 on-chip ADC. This error is reported if the procedure can not run to completion due to a hardware failure.

606 **Rundown gain out of range** This test checks the nominal gain between the integrating ADC and the U17 on-chip ADC. The nominal gain is checked to ±10% tolerance.

607 **Rundown too noisy** This test checks the gain repeatability between the integrating ADC and the U17 on-chip ADC. The gain test (606) is performed eight times. Gain noise must be less that ±64 lsb's of the U17 on-chip ADC.

608 **Serial configuration readback failed** This test re-sends the last 3 byte serial configuration data to all the serial path (SERDAT, SERBCK, SERCLK). The data is then clocked back into U16 and compared against the original 3 bytes sent. A failure occurs if the data do not match. This tests checks the serial data path through U29.

624 **Unable to sense line frequency** This test checks that the LSENCE logic input U17 is toggling. If no logic input detected, the power supply will assume a 50 Hz line operation for all future measurements.

625 **I/O processor did not respond** This test checks that communications can be established between U17 and U7 through the optically isolated (U9 and U10) serial data link. Failure to establish communication in either direction will generate an error. If this condition is detected at power-on self-test, the power supply will beep and the error annunciator will be on.

626 **I/O processor failed self-test** This test causes the earth referenced processor U7 to execute an internal, ram test. Failure will generate an error.

630 **Fan test failed** This test checks if the fan current is flowing. If the current is not detected at power-on self-test, the power supply will beep and the error annunciator will be on. Fan test fail could likely induce overtemperature condition in the power supply.

631 **System DAC test failed** This test checks if the DAC hardware is functional. The main controller U17 sends a reference voltage data to DAC and converts the DAC output to digital data to see if the digital data is within a valid range.

632 **Hardware test failed** This test checks the status of voltage and current error amplifiers for the power circuit. If both amplifiers are not operational, the power supply will beep and the error annunciator will be on.

General Disassembly

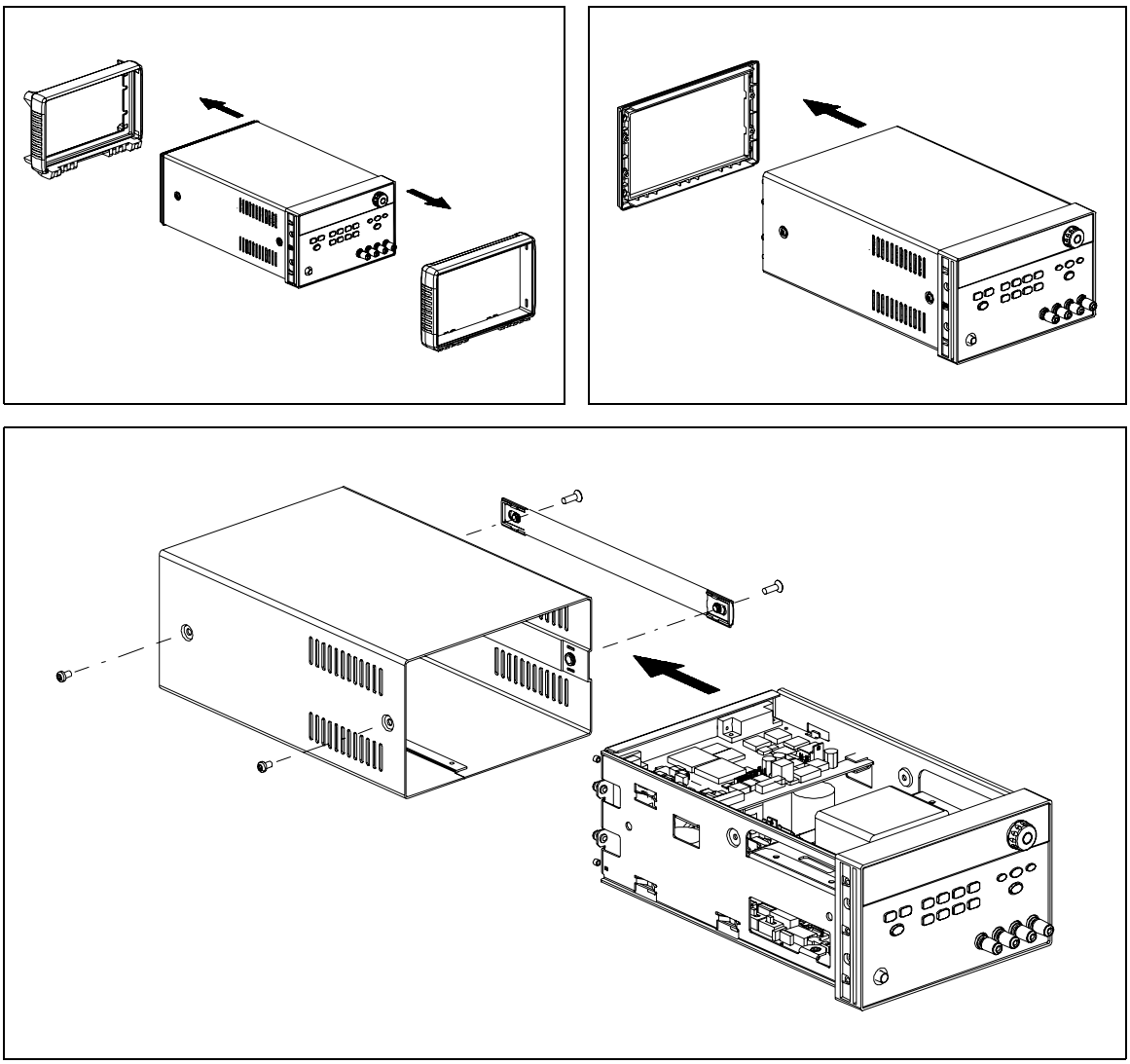

Recommended Test Equipment

The test equipment recommended for the performance verification and adjustment procedures is listed below. If the exact instrument is not available, use the accuracy requirements shown to select substitute calibration standards. If you use equipment other than that recommended in Table A-2, you must recalculate the measurement uncertainties for the actual equipment used.

Table A-2 Recommended Test Equipment

Instrument	Requirements	Recommended Model	Use
GPIB controller	Full GPIB or RS-232 capabilities	Agilent 82341C interface card or equivalent	Programming and readback accuracy
Oscilloscope	100 MHz with 20 MHz bandwidth	Agilent 54602B	Display transient response and ripple & noise waveform
RMS Voltmeter	20 Hz to 20 MHz		Measure rms ripple & noise
Cable (BNC to BNC)	50 ohm, 9 inch (23 Cm)	Agilent 10502A or 10503A if the 10502A is not available.	Measure rms ripple & noise (CV PARD, CC PARD)
BNC (Female) Bulkhead Receptacle	Isolated Ground. Nominal impedance: 50 Ohm	Pomona Model 5148	Measure rms ripple & noise (CV PARD, CC PARD)
Split Ferrites	For use with round cable	Steward Co. 28A2029-0A0	Noise coupling reduction
Digital Voltmeter	Resolution: 0.1 mV Accuracy: 0.01%	Agilent 34401A	Measure dc voltages
Electronic Load	Voltage Range: 240 Vdc Current Range: 10 Adc Open and Short Switches Transient On/Off	Agilent 60503B	Measure load and line regulations and transient response time.
Resistive Loads (R_L)	(2.7 Ω, 150 W/13.5 Ω, 150 W)[1] (43.8 Ω, 300 W/120 Ω, 300 W)[2] (1.6 Ω, 300 W/8.0 Ω, 300 W)[3] (25 Ω, 300 W/75 Ω, 300 W)[4]		Measure ripple and noise
Current monitoring Resistor (Shunt) - R_{M1}	(0.01 Ω, 0.1%)*	ISOTEK Co. Model: A-H or equivalent	Constant current test setup
Current monitoring Resistor (Shunt) - R_{M2}	(0.1 Ω/5 W, 1%)*	Vishay Co. Model: LVR-5-43 or equivalent	Measure current rms ripple & noise

* To find the accurate resistance, it is recommended to use a current monitoring resistor after calibration.
[1]E3646A model, [2]E3647A model, [3]E3648A model, [4]E3649A model.

Test Considerations

To ensure proper power supply operation, verify that you have selected the correct power-line voltage prior to attempting any test procedure in this chapter. See page 21 for line voltage conversion.

Ensure that all connections of terminals (both front panel and rear panel) are removed while the power supply internal self-test is being performed.

For optimum performance verification, all test procedures should comply with the following recommendations:

- Assure that the calibration ambient temperature is stable and between 20°C and 30°C.
- Assure ambient relative humidity is less than 80%.
- Allow a 1-hour warm-up period before verification or calibration.
- Use short cables to connect test set-ups.

Caution *The tests should be performed by qualified personnel. During performance verification tests, hazardous voltages may be present at the outputs of the power supply.*

Operation Verification and Performance Tests

Operation Verification Tests

To assure that the power supply is operating properly, without testing all specified parameters, perform the following test procedures:

- Perform the *power-on* self-test and check out procedures on page 18. (See "Self-Test" on page 58 for more information)
- Perform the Voltage Programming and Readback Accuracy test, and the Current Programming and Readback Accuracy tests in this document.

Performance Tests

The following sections provide test procedures for verifying the supply's compliance with the specifications listed in Table 8-1, "Performance Specifications," on page 159. All of the performance test specifications and calculated measurement uncertainties are entered in the appropriate Performance Test Record Card for your specific model. You can record the actual measured values in the column provided in this card.

If you use equipment other than that recommended in Table A-1, you must recalculate the measurement uncertainties for the actual equipment used.

Measurement Techniques

Setup for Most Tests

Most tests are performed at the front terminals as shown in Figure A-1. Measure the dc voltage directly at the (+) and (-) terminals on the front panel.

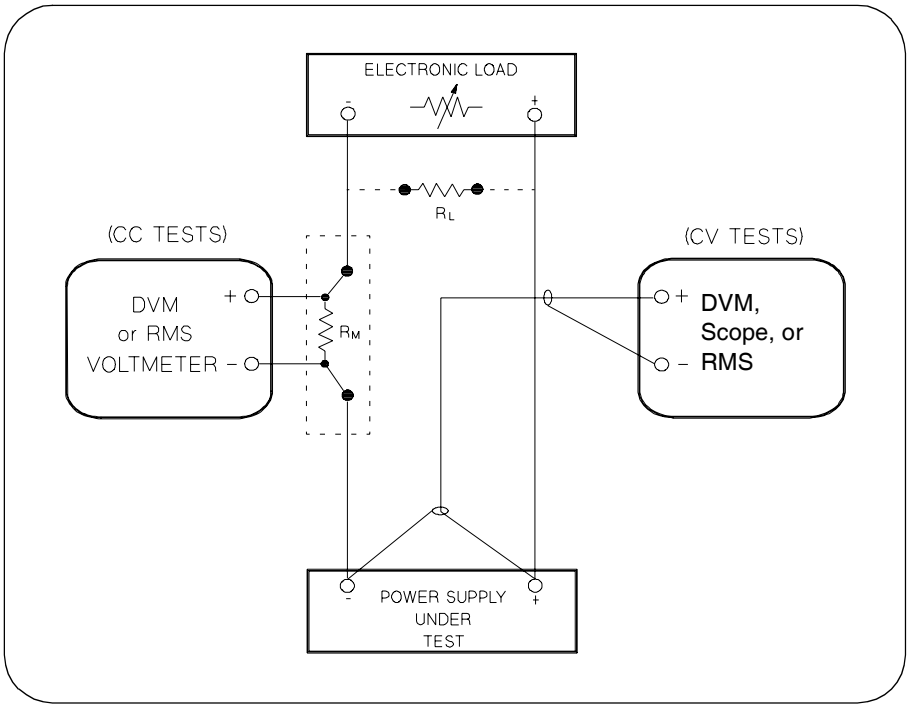

Figure A-1 Performance Verification Test Setup

Current-Monitoring Resistor

To eliminate output current measurement error caused by the voltage drops in the leads and connections, connect the current monitoring resistor between the (-) output terminal and the load as a four-terminal device. Connect the current-monitoring leads inside the load-lead connections directly at the monitoring points on the resistor element (see R_M in Figure A-1).

General Measurement Techniques

To achieve best results when measuring load regulation, peak to peak voltage, and transient response time of the power supply, measuring devices must be connected through the hole in the neck of the binding post at (A) while the load resistor is plugged into the front of the output terminals at (B). A measurement made across the load includes the impedance of the leads to the load. The impedance of the load leads can easily be several orders of the magnitude greater than the power supply impedance and thus invalidate the measurement. To avoid mutual coupling effects, each measuring device must be connected directly to the output terminals by separate pairs of leads.

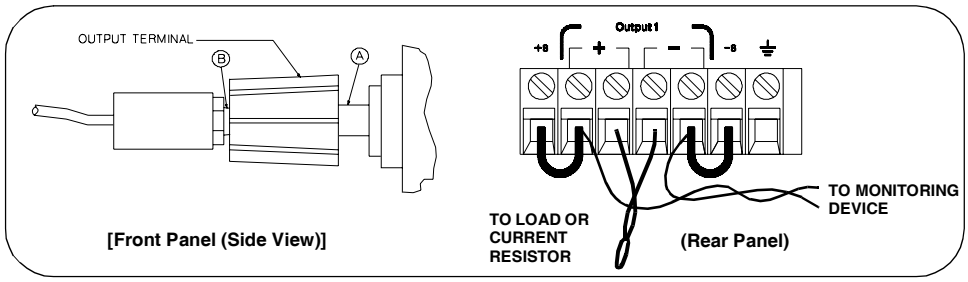

Figure A-2 Front/Rear Panel Terminal Connections

Electronic Load

Many of the test procedures require the use of a variable load resistor capable of dissipating the required power. Using a variable load resistor requires that switches should be used to connect, disconnect, and short the load resistor. An electronic load, if available, can be used in place of a variable load resistor and switches. The electronic load is considerably easier to use than load resistors. It eliminates the need for connecting resistors or rheostats in parallel to handle power, it is much more stable than carbon-pile load, and it makes easy work of switching between load conditions as is required for the load regulation and load response tests. Substitution of the electronic load requires minor changes to the test procedures in this chapter.

Programming

Most performance tests can be performed from the front panel. However, an GPIB or RS-232 controller is required to perform the voltage and current programming accuracy and readback accuracy tests.

The test procedures are written assuming that you know how to program the power supply either from the front panel or from an GPIB or RS-232 controller. See “Output Setting and Operation Commands”, starting on page 81 for complete instructions on remote programming.

Constant Voltage (CV) Verifications

Constant Voltage Test Setup

If more than one meter or if a meter and an oscilloscope are used, connect each to the (+) and (-) terminals by a separate pair of leads to avoid mutual coupling effects. Use coaxial cable or shielded 2-wire cable to avoid noise pick-up on the test leads.

Table A-3 Verification Programming Values

Model	Low voltage range	High voltage range	Model	Low voltage range	High voltage range
E3646A	8V/3A	20V/1.5A	E3647A	35V/0.8A	60V/0.5A
E3648A	8V/5A	20V/2.5A	E3649A	35V/1.4A	60V/0.8A

Voltage Programming and Readback Accuracy

This test verifies that the voltage programming and GPIB or RS-232 readback functions are within specifications. Note that the readback values over the remote interface should be identical to those displayed on the front panel.

You should program the power supply over the remote interface for this test to avoid round off errors.

1 Turn off the power supply and connect a digital voltmeter between the (+) and (-) terminals of the output to be tested as shown in Figure A-1.

2 Turn on the power supply. Select the output to be tested and the high voltage range (20V/1.5A)† and then enable the output by sending the commands:

```
INST:SEL {OUT1|OUT2}
VOLT:RANG P20V   (E3646A model)
OUTP ON
```

3 Program the output voltage to 0 volt and current to full scale rated value (1.5 A)† by sending the commands:

```
VOLT 0
CURR 1.5   (E3646A model)
```

4 Record the output voltage reading on the digital voltmeter (DVM). The reading should be within the limit of (0 V ± 10 mV) for output1 or (0 V ± 25 mV) for output2. Also, note that the **CV**, **Adrs**, **Limit**, and **Rmt** annunciators are on.

†For E3646A model, and see Table A-3 for other models.

5 Readback the output voltage over the remote interface by sending the command:

```
MEAS:VOLT?
```

6 Record the value displayed on the controller. This value should be within the limit of (DVM ±5 mV) for output1 or (DVM ±25 mV) for output2.

7 Program the output voltage to full scale rated value (20 V)† by sending the command:

```
VOLT 20.0   (E3646A model)
```

8 Record the output voltage reading on the digital voltmeter (DVM). The reading should be within the limit of (20 V ± 20 mV)* or (60 V ± 40mV)** for output1, or (20 V ± 45 mV)* or (60 V ± 85mV)** for output2.

9 Readback the output voltage over the remote interface by sending the command:

```
MEAS:VOLT?
```

10 Record the value displayed on the controller. This value should be within the limit of (DVM ± 15 mV)* or (DVM ± 35mV)** for output1, or (DVM ± 45 mV)* or (DVM ± 85 mV)** for output2.

11 Repeat steps (1) through (10) for the other output.

CV Load Effect (Load Regulation)

This test measures the immediate change in the output voltage resulting from a change in the output current from full to no load.

1 Turn off the power supply and connect a digital voltmeter between the (+) and (-) terminals of the output as shown in Figure A-1.

2 Turn on the power supply. Select the output to be tested and the high voltage range (20V/1.5A)†, enable the output, and set the display to the *limit* mode. When the display is in the limit mode, program the output current to the maximum programmable value and the voltage to the full value (20.0 V)†.

3 Operate the electronic load in *constant current* mode and set its current to the (1.5 A)†. Check that the front panel **CV** annunciator remains lit. If not lit, adjust the load so that the output current drops slightly until the **CV** annunciator lights. Record the output voltage reading on the digital voltmeter.

*For E3646A/48A models. **For E3647A/49A models.
†For E3646A model, and see Table A-3 for other models.

4 Operate the electronic load in open mode (input off). Record the output voltage reading on the digital voltmeter immediately. The difference between the digital voltmeter readings in steps (3) and (4) is the CV load regulation. The difference of the readings during the immediate change should be within the limit of (5 mV)* or (9 mV)**.

5 Repeat steps (1) through (4) for the other output.

CV Source effect (Line Regulation)

This test measures the immediate change in output voltage that results from a change in ac line voltage from the minimum value (10% below the nominal input voltage) to maximum value (10% above the nominal input voltage).

1 Turn off the power supply and connect a digital voltmeter between the (+) and (-) terminals of the output to be tested as shown in Figure A-1.

2 Connect the ac power line through a variable voltage transformer.

3 Turn on the power supply. Select the output to be tested and the high voltage range (20V/1.5A)†, enable the output, and set the display to the limit mode. When the display is in the limit mode, program the current to the maximum programmable value and the voltage to full rated value (20.0 V)†.

4 Operate the electronic load in constant current mode and set its current to (1.5 A)†. Check that the **CV** annunciator remains lit. If not lit, adjust the load so that the output current drops slightly until the **CV** annunciator lights.

5 Adjust the transformer to low line voltage limit (104 Vac for nominal 115 Vac, 90 Vac for nominal 100 Vac, or 207 Vac for nominal 230 Vac). Record the output reading on the digital voltmeter.

6 Adjust the transformer to high line voltage (127 Vac for nominal 115 Vac, 110 Vac for nominal 100 Vac, or 253 Vac for nominal 230 Vac). Record the voltage reading on the digital voltmeter immediately. The difference between the digital voltmeter readings in steps (5) and (6) is the CV line regulation. The difference of the readings during the immediate change should be within the limit of (5 mV)* or (9 mV)**.

7 Repeat steps (1) through (6) for the other output.

*For E3646A/48A models. **For E3647A/49A models.
†For E3646A model, and see Table A-3 for other models.

CV PARD (Ripple and Noise)

Periodic and random deviations (PARD) in the output (ripple and noise) combine to produce a residual ac voltage superimposed on the dc output voltage. CV PARD is specified as the rms or peak-to-peak output voltage in the frequency range from 20 Hz to 20 MHz.

- VRMS measurement techniques:

When measuring Vrms ripple and noise, the monitoring device should be plugged into the front of the terminals at (A) in Figure A-2. Use the BNC (Female) receptacle and the cable (BNC to BNC) to connect the monitor device to the power supply. To reduce the measurement error caused by common mode noise, it is recommended to twist the connection wire between the BNC receptacle and the output terminals. The load resistor is connected to the terminal at (B) in Figure A-2. Twisted leads between the load resistor and the power supply helps reduce noise pickup for these measurements.

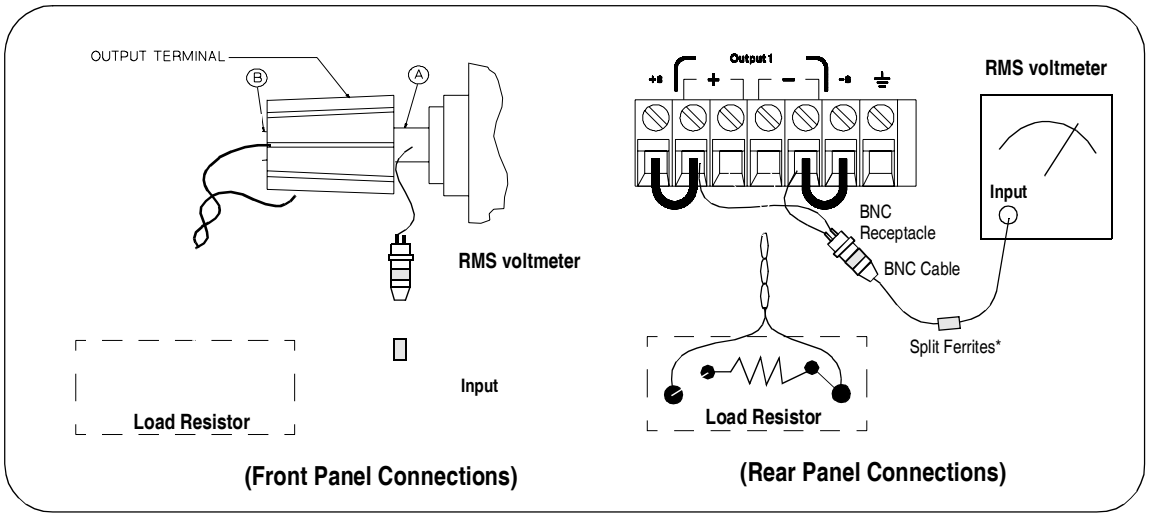

Note: *For better measurement result, it is recommended to make the connection between the BNC receptacle and the output terminals shorter as much as possible, and to use the recommended split ferrites with the cable (BNC to BNC) as shown above.*

1 Turn off the power supply and connect the output to be tested as shown in Figure A-1 to an oscilloscope (ac coupled) between (+) and (-) terminals. Set the oscilloscope to AC mode and bandwidth limit to 20 MHz. Connect a resistive load (13.5 Ω)‡ to the terminal at (B) as shown above.

2 Turn on the power supply. Select the high voltage range (20V/1.5A)†, enable the output, and set the display to the limit mode. When the display is in the limit mode, program the current to the full scale rated value (1.5 A)† and the voltage to the full rated value (20.0 V)†.

3 Check that the front panel **CV** annunciator remains lit. If not lit, adjust the load down slightly.

4 Note that the waveform on the oscilloscope does not exceed the peak-to-peak limit of (5 mV)* or (8 mV)**.

5 Disconnect the oscilloscope and connect the ac rms voltmeter in its place according to the VRMS measurement techniques on page 182 and as shown on the previous page. The rms voltage reading does not exceed the rms limit of 0.5 mV* or 1 mV**.

6 Repeat steps (1) through (5) for the other output.

*For E3646A/48A models. **For E3647A/49A models.
†For E3646A model, and see Table A-3 for other models.
‡For E3646A model, and see Table A-2 for other models.

Load Transient Response Time

This test measures the time for the output voltage to recover to within 15 mV of nominal output voltage following a load change from full load to half load, or half load to full load.

1. Turn off the power supply and connect the output to be tested as shown in Figure A-1 with an oscilloscope. Operate the electronic load in constant current mode.
2. Turn on the power supply. Select the output to be tested and the high voltage range (20V/1.5A)†, enable the output, and set the display to the limit mode. When the display is in the limit mode, program the current to the full scale rated value (1.5 A)† and the voltage to the full scale rated value (20.0 V)†.
3. Set the electronic load to transient operation mode between one half of the output's full rated value and the output's full rated value at a 1 kHz rate with 50% duty cycle.
4. Set the oscilloscope for ac coupling, internal sync, and lock on either the positive or negative load transient.
5. Adjust the oscilloscope to display transients as shown in Figure A-4. Note that the pulse width (t2 - t1) of the transients at 15 mV from the base line is no more than 50 µsec for the output.
6. Repeats steps (1) through (5) for the other output.

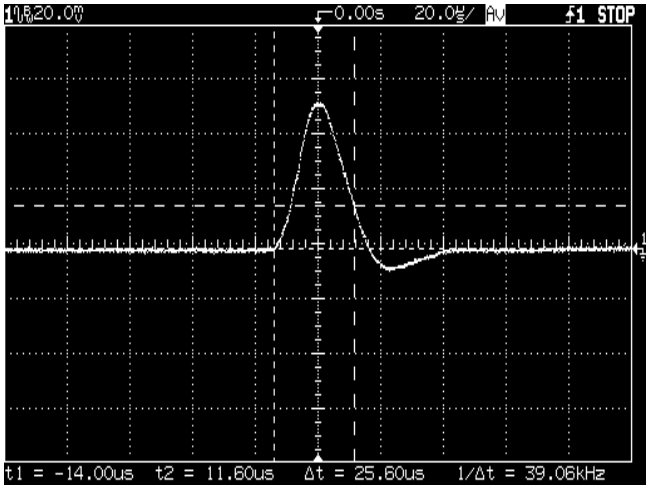

Figure A-4 Transient Response Time

†For E3646A model, and see Table A-3 for other models

Constant Current (CC) Verifications

Constant Current Test Setup

Follow the general setup instructions in the General Measurement Techniques, on page 178, and the specific instructions will be given in the following paragraphs.

Current Programming and Readback Accuracy

This test verifies that the current programming and GPIB or RS-232 readback functions are within specifications. Note that the readback values over the remote interface should be identical to those displayed on the front panel. The accuracy of the current monitoring resistor must be 0.01% or better.

You should program the power supply over the remote interface for this test to avoid round off errors.

1. Turn off the power supply and connect a 0.01 Ω current monitoring resistor (R_{M1}) across the output to be tested and a digital voltmeter across the current monitoring resistor (R_{M1}) as shown in Figure A-1.
2. Turn on the power supply. Select the output to be tested and the low voltage range (8V/3A)† and then enable the output by sending the commands:

```
INST:SEL {OUT1|OUT2}
VOLT:RANG P8V   (E3646A model)
OUTP ON
```

3. Program the output voltage to full scale rated voltage (8.0 V)† and output current to zero amps by sending the commands:

```
VOLT 8   (E3646A model)
CURR 0
```

4. Divide the voltage drop (DVM reading) across the current monitoring resistor (R_M) by its resistance to convert to amps and record this value (I_O). This value should be within the limit of (0 A ± 10 mA). Also, note that the **CC**, **Adrs**, **Limit**, and **Rmt** annunciators are on.
5. Readback the output current over the remote interface by sending the command:

```
MEAS:CURR?
```

†For E3646A model, and see Table A-3 for other models

6 Record the value displayed on the controller. This value should be within the limit of (I_O ± 5 mA) for output1 or (I_O ± 10 mA) for output2.

7 Program the output current to the full scale rated value (3 A)† by sending the command:

```
CURR 3.0   (E3646A model)
```

8 Divide the voltage drop (DVM reading) across the current monitoring resistor (R_M) by its resistance to convert to amps and record this value (I_O). This value should be within the limit of:

E3646A	E3647A	E3648A	E3649A
3 A ± 16 mA	0.8 A ± 11.6 mA	5 A ± 20 mA	1.4 A ± 12.8 mA

9 Readback the output current over the remote interface by sending the command:

```
MEAS:CURR?
```

10 Record the value displayed on the controller. This value should be within the limit of:

	E3646A	E3647A	E3648A	E3649A
Output1	(I_O ± 9.5 mA)	(I_O ± 6.2 mA)	(I_O ± 12.5 mA)	(I_O ± 7.1 mA)
Output2	(I_O ± 14.5 mA)	(I_O ± 11.2 mA)	(I_O ± 17.5 mA)	(I_O ± 12.1 mA)

11 Repeat steps (1) through (10) for the other output.

CC Load Effect (Load Regulation)

This test measures the immediate change in output current resulting from a change in the load from full rated output voltage to short circuit.

1 Turn off the power supply and connect the output to tested as shown in Figure A-1 with the digital voltmeter connected across the 0.01 Ω current monitoring resistor (R_{M1}).

2 Turn on the power supply. Select the low voltage range (8V/3A)†, enable the output, and set the display to the limit mode. When the display is in the limit mode, program the output voltage to the maximum programmable value and the output current to the full rated value (3 A)†.

†For E3646A model, and see Table A-3 for other models

3 Set the voltage of the electronic load to (8.0 V)† to operate it in constant voltage mode since a voltage drop occurs on the load wires. Check that the **CC** annunciator is on. If it is not, adjust the load so that the output voltage drops slightly. Record the current reading by dividing the voltage reading on the digital voltmeter by the resistance of the current monitoring resistor.

4 Operate the electronic load in short (input short) mode. Record the current reading immediately by dividing the voltage reading on the digital voltmeter by the resistance of the current monitoring resistor. The difference between the current readings in step (3) and (4) is the load regulation current. The difference of the readings during the immediate change should be within the limit of:

E3646A	E3647A	E3648A	E3649A
0.55 mA	0.33 mA	0.75 mA	0.39 mA

5 Repeat steps (1) through (4) for the other output.

CC Source Effect (Line Regulation)

This test measures the immediate change in output current that results from a change in ac line voltage from the minimum value (10% below the nominal input voltage) to the maximum value (10% above nominal voltage).

1 Turn off the power supply and connect the output to be tested as shown in Figure A-1 with the digital voltmeter connected across the current monitoring resistor (R_{M1}).

2 Connect the ac power line through a variable voltage transformer.

3 Turn on the power supply. Select the low voltage range (8V/3A)†, enable the output, and set the display to the limit mode. When the display is in the limit mode, program the voltage to the maximum programmable value and the current to the full rated value (3 A)†.

4 Operate the electronic load in constant voltage mode and set its voltage to (8.0 V)†. Check that the **CC** annunciator remains lit. If not lit, adjust the load so that the output voltage drops slightly until the **CC** annunciator lights.

5 Adjust the transformer to low line voltage limit (104 Vac for nominal 115 Vac, 90 Vac for nominal 100 Vac, or 207 Vac for nominal 230 Vac). Record the output current reading by dividing the voltage reading on the digital voltmeter by the resistance of the current monitoring resistor.

†For E3646A model, and see Table A-3 for other models

6 Adjust the transformer to 10% above the nominal line voltage (127 Vac for a 115 Vac nominal input, 110 Vac for a 100 Vac nominal input or 253 Vac for a 230 Vac nominal input). Record the current reading again immediately by dividing the voltage reading on the digital voltmeter by the resistance of the current monitoring resistor. The difference between the current readings in step (5) and (6) is the load regulation current. The difference of the readings during the immediate change should be within the limit of:

E3646A	E3647A	E3648A	E3649A
0.55 mA	0.33 mA	0.75 mA	0.39 mA

7 Repeat steps (1) through (6) for the other output.

CC PARD (Ripple and Noise)

Periodic and random deviations (PARD) in the output (ripple and noise) combine to produce a residual ac current, as well, as an ac voltage superimposed on the dc output. CC PARD is specified as the rms output current in a frequency range 20 Hz to 20 MHz with the power supply in constant current operation.

Note: *For better measurement result, it is recommended to make the connection between the BNC receptacle and the output terminals shorter as much as possible, and to use the recommended split ferrites with the cable (BNC to BNC) as shown above.*

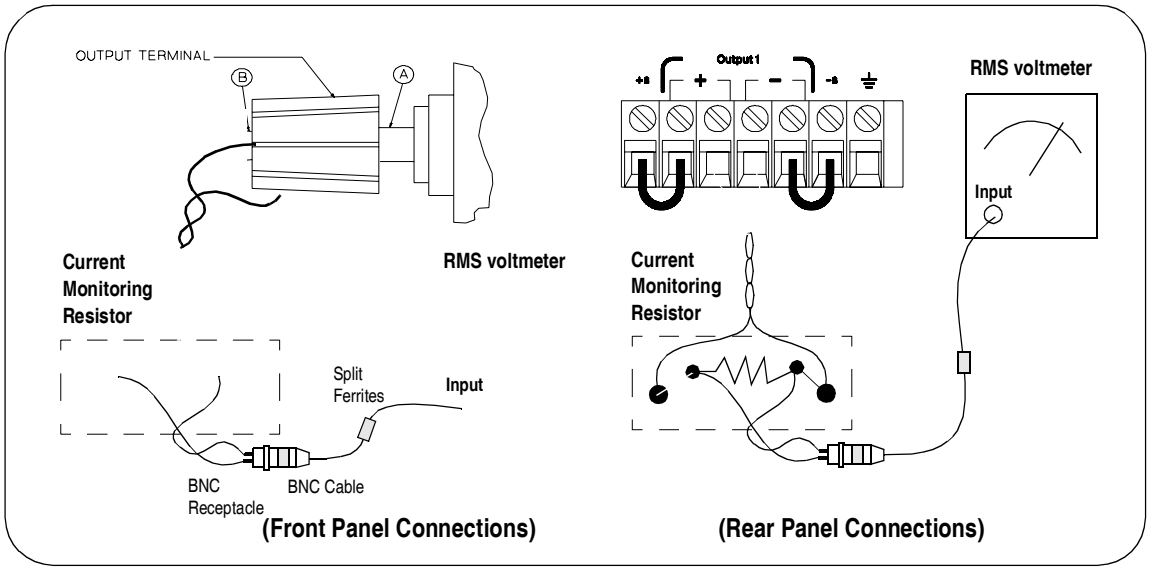

1 Turn off the power supply and connect the output to be tested as shown above with the current monitoring resistor 0.2 Ω (R_{M2}) across output terminals. Connect a rms voltmeter across the current monitoring resistor as shown on the previous page.

2 Turn on the power supply. Select the output to be tested and the low voltage range (8V/3A)†, enable the output, and set the display to the limit mode. When the display is in the limit mode, program the current to full scale rated value (3 A)† and the voltage to the full scale rated value (8.0 V)†.

3 Divide the reading on the rms voltmeter by the load resistance to obtain rms current. The readings should be within the limit of 4 mA.

4 Repeat steps (1) through (3) for the other output.

Common Mode Current Noise

The common mode current is that ac current component which exists between the output or output lines and chassis ground. Common mode noise can be a problem for very sensitive circuitry that is referenced to earth ground. When a circuit is referenced to earth ground, a low level line-related ac current will flow from the output terminals to earth ground. Any impedance to earth ground will create a voltage drop equal to the output current flow multiplied by the impedance.

1 Turn off the power supply and connect a 100 kΩ resistor (R_S) and a 2200 pF capacitor in parallel between the (-) terminal and chassis ground at the rear output terminals.

2 Connect a digital voltmeter across R_S.

3 Turn on the power supply. Select the output to be tested and the high voltage range (20V/1.5A)†, enable the output, and set the display to the limit mode. When the display is in the limit mode, program the output to the full scale rated value (20 V and 1.5 A)†.

4 Record the voltage across R_S and convert it to current by dividing by the resistance (DVM reading/100 kΩ). Note that the current is less than 1.5 μA.

5 Repeat steps (1) through (4) for the other output.

†For E3646A model, and see Table A-3 for other models.

Performance Test Record for Your Power Supply

CV Performance Test Record

Test Description	Models	Output	Actual Result	Specifications	
				Upper Limit	Lower Limit
CV Programming Accuracy @ 0 volts (DVM reading)	all	Output1		+0.0100 V	-0.0100 V
		Output2		+0.0250 V	+0.0250 V
CV Readback Accuracy @ 0 volts	all	Output1		DVM + 0.0050 V	DVM - 0.0050 V
		Output2		DVM + 0.0250 V	DVM - 0.0250 V
CV Programming Accuracy @ Full Scale (DVM reading)	E3646A/48A	Output1		20.0200 V	19.9800 V
		Output2		20.0450 V	19.9550 V
	E3647A/49A	Output1		60.0400 V	59.9600 V
		Output2		60.0850 V	59.9150 V
CV Readback Accuracy @ Full Scale	E3646A/48A	Output1		DVM + 0.0150 V	DVM - 0.0150 V
		Output2		DVM + 0.0450 V	DVM - 0.0450 V
	E3647A/49A	Output1		DVM + 0.0350 V	DVM - 0.0350 V
		Output2		DVM + 0.0850 V	DVM - 0.0850 V
CV Load Effect (Load Regulation)	E3646A/48A	all		Maximum change: < 5 mV	
	E3647A/49A	all		Maximum change: < 9 mV	
CV Source Effect (Line Regulation)	E3646A/48A	all		Maximum change: < 5 mV	
	E3647A/49A	all		Maximum change: < 9 mV	
CV PARD (Normal mode)	E3646A/48A	all		< 5 mVp-p / 0.5 mVrms	
	E3647A/49A	all		< 8 mVp-p / 1 mVrms	
Load Transient Response Time	all	all		< 50 µsec	

CC Performance Test Record

Test Description	Models	Output	Actual Result	Specifications	
				Upper Limit	Lower Limit
CC Programming Accuracy @ 0 amps (I_O)	all	all		+0.0100 A	-0.0100 A
CC Readback Accuracy @ 0 amps	all	Output1		I_O + 0.0050 A	I_O - 0.0050 A
		Output2		I_O + 0.0100 A	I_O - 0.0100 A
CC Programming Accuracy @ Full Scale (I_O)	(E3646A)	all		3.01600 A	2.9840 A
	(E3647A)	all		0.8116 A	0.7884 A
	(E3648A)	all		5.02 A	4.98 A
	(E3649A)	all		1.4128 A	1.3872 A
CC Readback Accuracy @ Full Scale	(E3646A)	Output1		I_O + 0.0095 A	I_O - 0.0095 A
		Output2		I_O + 0.0145 A	I_O - 0.0145 A
	(E3647A)	Output1		I_O + 0.0062 A	I_O - 0.0062 A
		Output2		I_O + 0.0112 A	I_O - 0.0112 A
	(E3648A)	Output1		I_O + 0.0125 A	I_O - 0.0125 A
		Output2		I_O + 0.0175 A	I_O - 0.0175 A
	(E3649A)	Output1		I_O + 0.0071 A	I_O - 0.0071 A
		Output2		I_O + 0.0121 A	I_O - 0.0121 A
CC Load Effect (Load Regulation)	(E3646A)	all		Maximum change: < (0.55 mA)	
	(E3647A)	all		Maximum change: < (0.33 mA)	
	(E3648A)	all		Maximum change: < (0.75 mA)	
	(E3649A)	all		Maximum change: < (0.39 mA)	
CC Source Effect (Line Regulation)	(E3646A)	all		Maximum change: < (0.55 mA)	
	(E3647A)	all		Maximum change: < (0.33 mA)	
	(E3648A)	all		Maximum change: < (0.75 mA)	
	(E3649A)	all		Maximum change: < (0.39 mA)	
CC PARD (Normal mode)	all	all		< 4 mA rms	
CC PARD (Common mode)	all	all		< 1.5 µA rms	

Calibration Reference

Before you calibrate the power supply, you must unsecure it by entering the correct security code. See "Calibration Overview", starting on page 64, for more detailed procedures to unsecure or secure the power supply.

Agilent Technologies Calibration Services

When your power supply is due for calibration, contact your local Agilent Technologies Service Center for a low-cost calibration. The Agilent E3646A/47A/48A and E3649A power supplies are supported on calibration processes which allow Agilent Technologies to provide this service at competitive prices.

Calibration Interval

Recommended calibration interval for this power supply is 1 year. This will ensure that your power supply will remain within specification for the next calibration interval. Agilent Technologies does not recommend extending calibration intervals beyond 1 year for any application. This criteria for re-adjustment provides the best long-term stability.

To Unsecure the Power Supply Without the Security Code

To unsecure the power supply without the correct security code (when you forget the security code), follow the steps below. See "Electrostatic Discharge (ESD) Precautions" on page 170 before beginning this procedure.

1. Disconnect the power cord and all load connections from the power supply.
2. Remove the instrument cover. Refer to the disassembly drawing on page 174.
3. Connect the power cord and turn on the calibration mode by holding down the **Calibrate** key as you turn on the power supply and *hold down* the key until you hear a long beep. Be careful not to touch the power line connections.
4. Apply a short between the two exposed metal pads on JP3 (located near U17). The JP3 is outlined with a circle on the Digital board component locator (*top & bottom side*) drawing.
5. While maintaining the short, move to the security code and enter any unsecure code in the calibration mode. The power supply is now unsecured.
6. Remove the short at JP3. (An error occurs if not removed.)
7. Turn off and reassemble the power supply.

   Now you can enter a new security code. Be sure you take note of the new security code.

General Calibration/Adjustment Procedure

Note

*The power supply should be calibrated **after 1-hour warm-up** with no load connected. And Perform the voltage calibration prior to the **OVP** calibration.*

The *front panel* calibration procedures are described in this section.

- For voltage calibration, *disconnect* all loads from the power supply and connect a DVM across the output terminals.
- For current calibration, also *disconnect* all loads from the power supply, connect an appropriate current monitoring resistor 0.01 Ω across the output terminals, and connect a DVM across the terminals of the monitoring resistor.
- You can abort a calibration at any time by turning the power supply off from the front panel, by issuing a remote interface device clear message, or by pressing the front-panel "Local" key.

The following table shows calibration parameters and points which should be used to calibrate the output voltage and current.

Table 3-2 Parameters for Calibration

Output	Calibration Parameter	Voltage/ Current	Calibration Point mnemonic
Output 1	VOLT1 CAL	Voltage	V LO
			V MI
			V HI
	OVP1 CAL	OVP	None
	CURR1 CAL	Current	I LO
			I MI
			I HI
Output 2	VOLT2 CAL	Voltage	V LO
			V MI
			V HI
	OVP2 CAL	OVP	None
	CURR2 CAL	Current	I LO
			I MI
			I HI

Front Panel Voltage and Current Calibration

Note

Before attempting to calibrate the power supply, you must unsecure the power supply, and disconnect all loads from the power supply and connect a DVM across the output terminals. See "Calibration Overview", starting on page 64 to unsecure.

In the following procedure, the Agilent E3646A model is referenced to describe the calibration procedure as an example, so a different calibration value for each calibration point may be prompted to be adjusted for your specific model.

Power View Calibrate

1 Turn on the calibration mode.

CAL MODE

Turn on the calibration mode by holding down View Calibrate (Calibrate) key as you turn on the power supply and *hold down* the key until you hear a long beep. Make sure that the power supply is in "CV" mode. If the power supply is not in "CV" mode, an error occurs.

Voltage and OVP Calibration

View Calibrate

2 Move down a level to the voltage calibration mode.

volt1 cal

View Calibrate

3 Select the low-end voltage calibration point.

V LO 0.2000



4 Enter the reading you obtained from the DVM by using the knob and resolution selection keys.

V LO 0.2050

View Calibrate

5 Save the changes and select the middle voltage calibration point.

V MI 1**0**.000

If the entered number is within an acceptable range, an "ENTERED" message appears for a second. If the entered number is not correct, an error message will be displayed for a second and you will hear a beep, and then go back to the low, middle, or high voltage calibration point again as proceeding.



6 Enter the reading you obtained from the DVM by using the knob and resolution selection keys.

V MI 11.058

View Calibrate

7 Save the changes and select the high voltage calibration point.

V HI 1**9**.500



8 Enter the reading you obtained from the DVM by using the knob and resolution selection keys.

V HI 19.495

View Calibrate

9 Save the changes and go to the OVP calibration mode.

ovp1 cal

If the calibration fails, an error message will be displayed for a second and go back to the voltage calibration mode again. A "VOLTAGE CAL" message is displayed. Above message is displayed to indicate that the power supply is ready for the OVP calibration.

View
Calibrate

10 Run the OVP calibration.

CALibrating

Above message is displayed to indicate that the calibration is progressing. It takes approximately 10 seconds to complete the calibration. If the calibration fails, an error message will be displayed for a second and you will hear a beep, and then go back to the OVP calibration mode again.

Current Calibration

Connect an appropriate shunt 0.01 Ω across the output terminals, and connect a digital voltmeter across the shunt resistor for the current calibration.

View
Calibrate

11 Select the low-end current calibration point.

I LO 0.2000

12 Enter the computed value (DVM reading ÷ by shunt resistance) by using the knob and resolution selection keys.

Notice that you should wait for the DVM reading to be stabilized for accurate calibration during the current calibration.

I LO 0.1900

View
Calibrate

13 Save the changes and select the middle current calibration point.

I MI 1.5000

If the entered number is within an acceptable range, an "ENTERED" message appears for a second. If the entered number is not correct, an error message will be displayed for a second and you will hear a beep, and then go back to the low, middle, or high current calibration point again as proceeding.

14 Enter the computed value (DVM reading ÷ by shunt resistance) by using the knob and resolution selection keys.

I MI 1.5400

View
Calibrate

15 Save the change and select the high current calibration point.

I HI 2.8000

16 Enter the computed value (DVM reading ÷ by shunt resistance) by using the knob and resolution selection keys.

I HI 2.789 A

View
Calibrate

17 Save the new current calibration constants for the output1 and go to the calibration mode for the output2.

volt2 cal

If the calibration fails, an error message will be displayed for one second and you will hear a beep, and then go back to the current calibration mode again.

18 Repeat the steps (3) through (16) for the voltage, OVP, and current calibration.

Power

19 Exit the calibration mode.

cal mode

The above message appears if the calibration is successful. If the calibration fails, an error message will be displayed for one second and you will hear a beep, and then go back to the current calibration mode again.

Calibration Record for Your Power Supply

Step	Calibration Description	Measurement Mode (DVM)	Supply Being Adjusted
1	Turn on the calibration mode by holding down the "Calibrate" key as you turn on the power supply until you hear a long beep.		
2	Unsecure the power supply if secured. (See page 64)		
3	Press "Calibrate" key to move down menu to voltage calibration menu. A "VOLT1 CAL" is displayed. Press "Calibrate" key to select the low voltage calibration point.		Voltage Calibration
4	A low voltage calibration point is displayed. Enter the DVM reading by using the knob and resolution keys. Press "Calibrate" key to save the changes and select the middle calibration point.	V	Low voltage calibration
5	A middle voltage calibration point is displayed. Enter the DVM reading by using the knob and resolution selection keys. Press "Calibrate" key to save the changes and select the high calibration point.	V	Middle voltage calibration
6	A high voltage calibration point is displayed. Enter the DVM reading by using the knob and resolution selection keys. Press "Calibrate" key to save the changes and select the OVP calibration.	V	High voltage calibration
7	"OVP1 CAL" is displayed. Press "Calibrate" key to run the overvoltage calibration. A "CALIBRATING" is displayed to indicate that the calibration is progressing.	V	OVP calibration
8	Connect shunt resistor (0.01 Ω) across the output terminals. And press "Calibrate" key to select the current calibration.		Current calibration
9	A low current calibration point is displayed. Enter the computed value (DVM reading / by shunt resistance) by using the knob and resolution keys. Press "Calibrate" key to save the changes and select the middle calibration point.	A	Low current calibration
10	A middle current calibration point is displayed. Enter the computed value (DVM reading / by shunt resistance) by using the knob and resolution keys. Press "Calibrate" key to save the changes and select the high calibration point.	A	Middle current calibration
11	A high current calibration point is displayed. Enter the computed value (DVM reading / by shunt resistance) by using the knob and resolution keys. Press "Calibrate" key to save the changes	A	High current calibration
13	Repeat the steps (3) through (16) for the output2 calibration.		
14	Turn off the "Power" switch to exit the calibration menu.		Exit CAL MODE

Calibration Error Messages

The following tables are abbreviated lists of error messages for the E3646A, E3647A, E3648A, and E3649A. The errors listed below are the most likely errors to be encountered during calibration and adjustment. A more complete list of error messages and descriptions is contained in chapter 5.

Calibration Error Messages

Error	Error Messages
701	Cal security disabled by jumper
702	Cal secured
703	Invalid secure code
704	Secure code too long
705	Cal aborted
706	Cal value out of range
708	Cal output disabled
712	Bad DAC cal data
713	Bad readback cal data
714	Bad OVP cal data
717	Cal OVP status enabled
718	Gain out of range for gain error correction
740	Cal checksum failed, secure state
741	Cal checksum failed, string data
743	Cal checksum failed, store/recall data in location 1
744	Cal checksum failed, store/recall data in location 2
745	Cal checksum failed, store/recall data in location 3
746	Cal checksum failed, DAC cal constants
747	Cal checksum failed, readback cal constants
748	Cal checksum failed, GPIB address
749	Cal checksum failed, internal data
754	Cal checksum failed, store/recall data in location 4
755	Cal checksum failed, store/recall data in location 5

Schematics

This chapeter contains component locator drawings for the power supply.

- Component Locator (top) for main board assembly, on page 201
- Component Locator (bottom) for main board assembly, on page 202
- Component Locator (top & bottom) for digital board assembly, on page 203
- Component Locator for front panel, on page 204

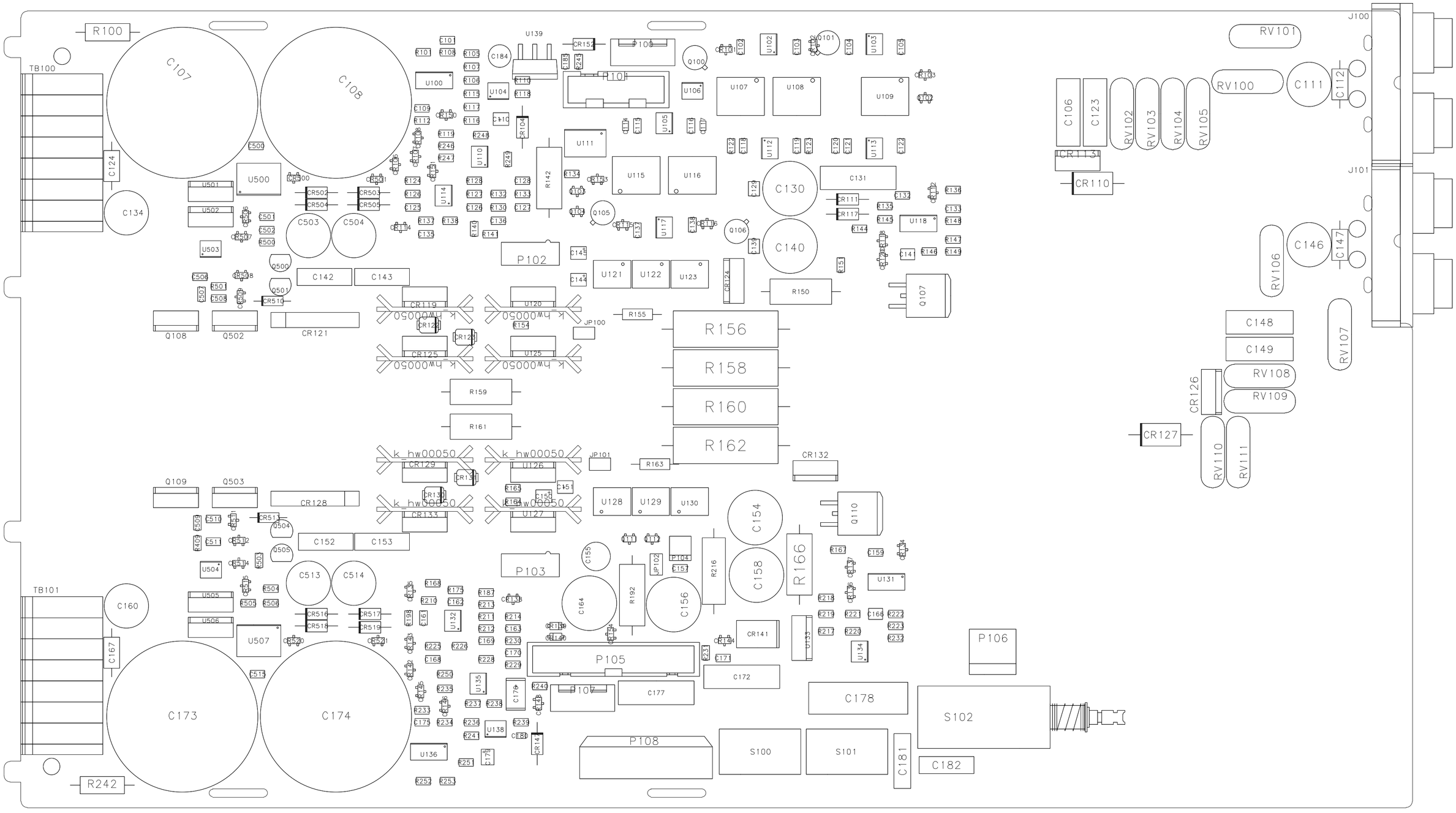
R100
TB100
C107
C108
C124
C134
U500
U501
U502
U503
C500
C501
C502
C503
C504
Q500
Q501
C142
C143
CR510
Q108
Q502
CR121
U139
C184
CR152
P100
Q100
U100
P101
U104
U106
U107
U108
U109
U110
U111
U115
U116
R142
P102
U121
U122
U123
C130
C131
C140
R150
Q107
U118
CR124
Q101
U102
U103
U105
U112
U113
U114
U117
C119
C120
C121
C122
C123
C129
C132
C133
C136
C137
C138
C139
C144
C145
C146
C147
C148
C149
C150
C151
C152
C153
C154
C155
C156
C158
C160
C164
C167
C169
C170
C171
C172
C173
C174
C175
C176
C177
C178
C179
C180
C181
C182
C183
C184
R101
R102
R103
R104
R105
R106
R107
R108
R109
R110
R111
R112
R113
R114
R115
R116
R117
R118
R119
R120
R121
R122
R123
R124
R125
R126
R127
R128
R129
R130
R131
R132
R133
R134
R135
R136
R137
R138
R139
R140
R141
R143
R144
R145
R146
R147
R148
R149
R151
R152
R153
R154
R155
R156
R158
R159
R160
R161
R162
R163
R164
R165
R166
R167
R168
R169
R170
R171
R172
R173
R174
R175
R176
R177
R178
R179
R180
R181
R182
R183
R184
R185
R186
R187
R188
R189
R190
R191
R192
R193
R194
R195
R196
R197
R198
R199
R200
R201
R202
R203
R204
R205
R206
R207
R208
R209
R210
R211
R212
R213
R214
R215
R216
R217
R218
R219
R220
R221
R222
R223
R224
R225
R226
R227
R228
R229
R230
R231
R232
R233
R234
R235
R236
R237
R238
R239
R240
R241
R242
R243
R244
R245
R246
R247
R248
R249
R250
R251
R252
R253
U120
U125
U126
U127
U128
U129
U130
U131
U132
U133
U134
U135
U136
U138
CR119
CR120
CR122
CR123
CR125
CR126
CR127
CR128
CR129
CR130
CR131
CR132
CR133
CR134
CR135
CR136
CR137
CR138
CR139
CR140
CR141
CR142
CR143
CR144
CR145
CR146
CR147
CR148
CR149
CR150
CR151
CR153
CR154
CR155
CR156
CR157
CR158
CR159
CR160
CR161
CR162
CR163
CR164
CR165
CR166
CR167
CR168
CR169
CR170
CR171
CR172
CR173
CR174
CR175
CR176
CR177
CR178
CR179
CR180
CR181
CR182
CR183
CR184
CR185
CR186
CR187
CR188
CR189
CR190
CR191
CR192
CR193
CR194
CR195
CR196
CR197
CR198
CR199
CR200
CR201
CR202
CR203
CR204
CR205
CR206
CR207
CR208
CR209
CR210
CR211
CR212
CR213
CR214
CR215
CR216
CR217
CR218
CR219
CR220
CR221
CR222
CR223
CR224
CR225
CR226
CR227
CR228
CR229
CR230
CR231
CR232
CR233
CR234
CR235
CR236
CR237
CR238
CR239
CR240
CR241
CR242
CR243
CR244
CR245
CR246
CR247
CR248
CR249
CR250
CR251
CR252
CR253
JP100
JP101
JP102
JP103
JP104
P103
P104
P105
P106
P107
P108
S100
S101
S102
J100
J101
RV100
RV101
RV102
RV103
RV104
RV105
RV106
RV107
RV108
RV109
RV110
RV111
k_hw00050


R322
C310
R321
R319
R309
C308
R318
R316
R320
R328
R327
R324
R323
R334
R331
R330
R329
R326
R325
R317
R333
R335
R336
R332
R343
R342
R341
R340
R339
R338
R337
R410
C307
R347
R346
C312
R345
R344
C311
C328
C327
R414
R413
R352
R351
R349
R348
R356
R353
R412
R350
R358
R355
R354
R357
R360
C314
C313
R359
R411
R362
R361
R363
R302
C300
C303
C302
R301
R304
R307
R306
R305
R114
R304
R309
R308
C305
R310
R312
C308
R313
C307
R300
R550
C330
C562
R552
R551
C550
C553
R314
R129
R301
C558
R552
R557
C551
C559
R554
R560
R555
R556
C561
R561
R562
R407
C315
R409
C563
R553
R565
R564
R408
R382
C317
R381
R380
R372
R375
R383
C318
R215
R384
C554
R568
R567
R568
R367
C560
R570
R569
R369
C363
C318
R573
R574
R571
C555
R572
R575
C557
C556
C370
C558
C563
R576
R577
C559
C323
R578
R393
R392
R397
R394
C323
R395
R398
C319
C321
R385
R389
R386
R399
C324
C325
R390
R387
R402
R401
R400
C326
C322
R388
C329
R391
C320
C371



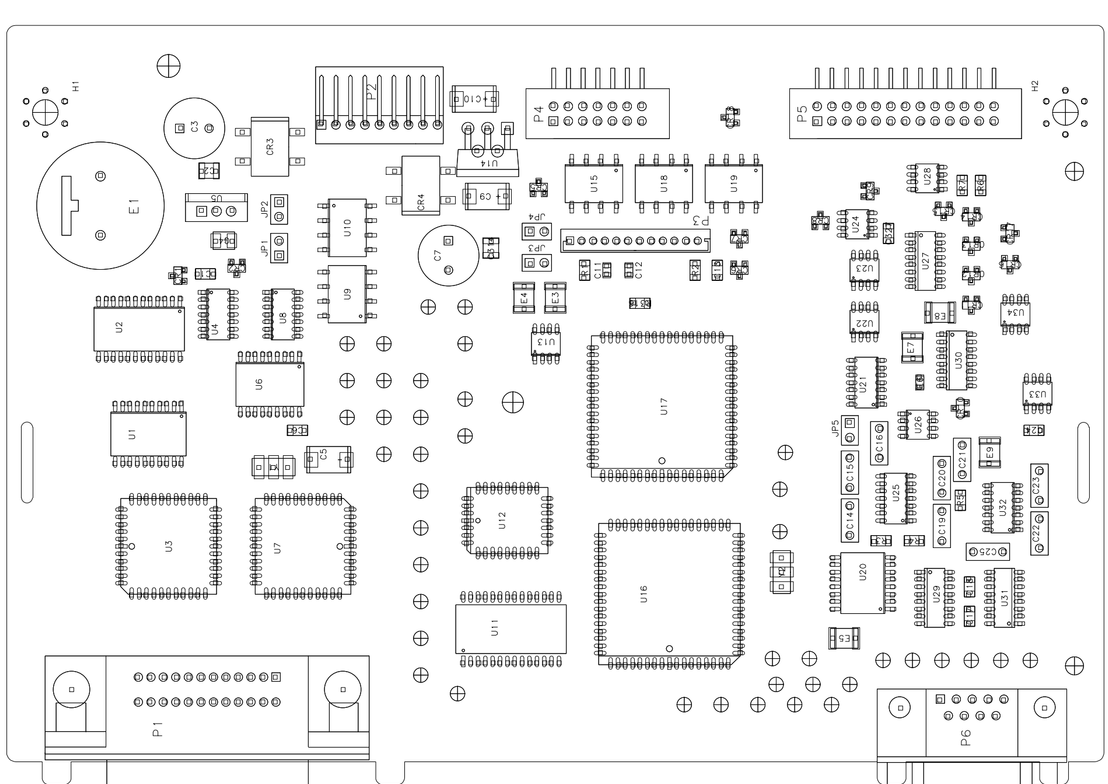
H1
H2
P1
P2
P3
P4
P5
P6
E1
C3
C5
C7
CR3
CR4
JP1
JP2
JP3
JP4
JP5
U1
U2
U3
U4
U5
U6
U7
U8
U9
U10
U11
U12
U13
U14
U15
U16
U17
U18
U19
U20
U21
U22
U23
U24
U25
U26
U27
U28
U29
U30
U31
U32
U33
U34

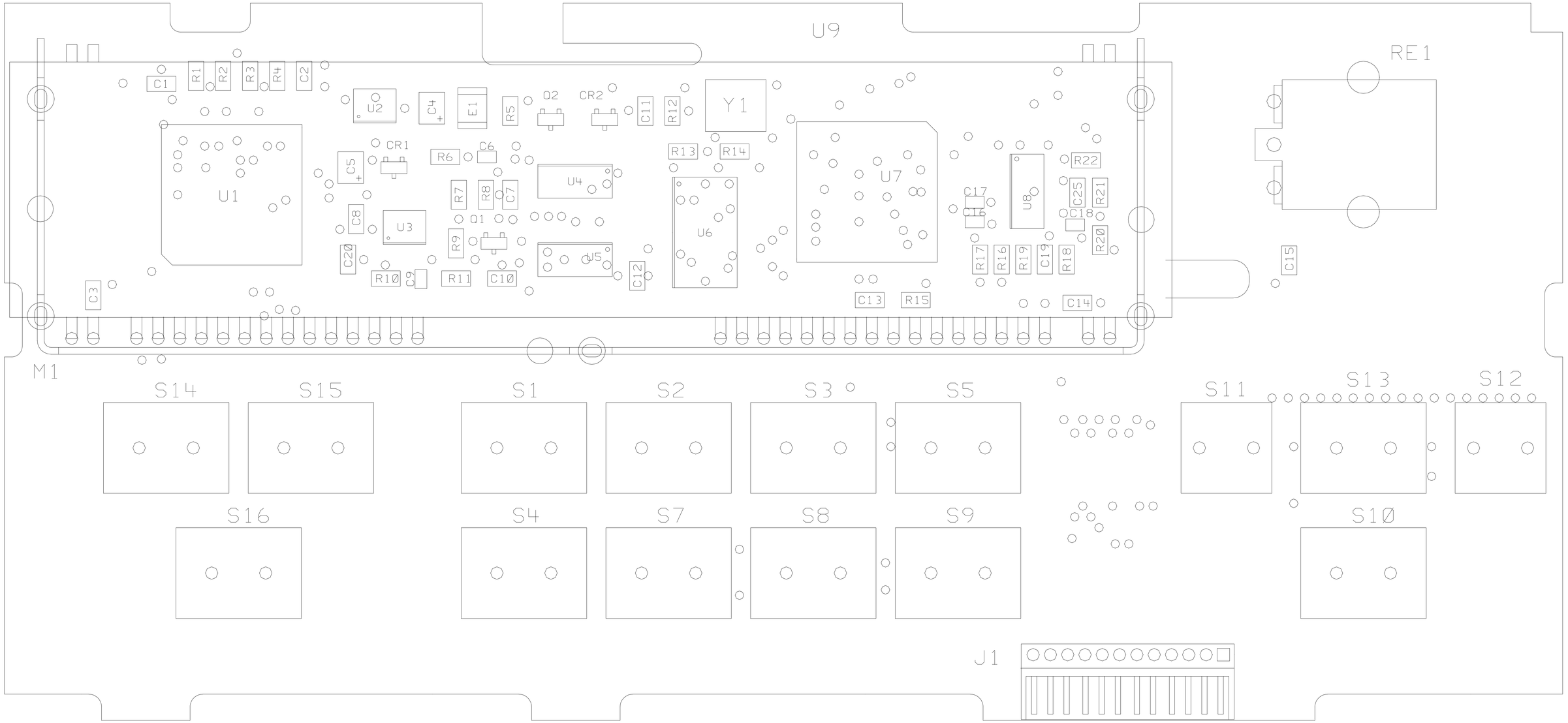
U9
RE1
C1
R1
R2
R3
R4
C2
U2
C4
E1
R5
Q2
CR2
C11
R12
Y1
U1
CR1
C5
R6
C6
R13
R14
U7
U8
R22
C25
R21
C17
C16
C18
U4
R7
R8
C7
C8
U3
Q1
U6
R9
U5
R20
C20
R10
C9
R11
C10
C12
R17
R16
R19
C19
R18
C15
C3
C13
R15
C14
M1
S14
S15
S1
S2
S3
S5
S11
S13
S12
S16
S4
S7
S8
S9
S10
J1

Index

If you have questions relating to the operation of the power supply, call 1-800-829-4444 in the United States, or contact your nearest Agilent Technologies Sales Office.

A

AC input ratings 162
accessories 28
activation time 160
active load 34
annunciators, display 5
application programs 134
asterisk (*) 114

B

basic tests
  output checkout 18, 19
  preliminary checkout 17
battery charging 55
bus controller, interrupt 106

C

C programming example 135
calibration 64
  disable security code 64
  interval (recommended) 162
  message (string) reading 68
calibration commands 94
character frame 61
checkout
  current output 19
  preliminary 17
  voltage output 18
colon 113
command format 112
command separators
  colon 113
  semicolon 113
command syntax 112
commands(calibration)
  CALibration:COUNt? 94
  CALibration:CURRent 94
  CALibration:CURRent:LEVel 94
  CALibration:SECure:CODE 94
  CALibration:SECure:STATe 95
  CALibration:SECure:STATe? 95
  CALibration:STRing 95
  CALibration:STRing? 95
  CALibration:VOLTage:LEVel 95
  CALibration:VOLTage:PROTection 95
  CALibration:VOLTage[:DATA] 95
commands(Interface Configuration)
  <Ctrl-C> 97
  SYSTem:INTerface 97
  SYSTem:LOCal 97
  SYSTem:REMote 97
  SYSTem:RWLock 97
commands(output setting and measurement)
  APPLy 80
  APPLy? 80
  CURRent 81
  CURRent:STEP 81
  CURRent:STEP? 82
  CURRent:TRIGgered 82
  CURRent:TRIGgered? 82
  CURRent? 81
  INSTrument
  COUPle[:TRIGger] 83
  INSTrument:COUPle[:TRIGger]? 84
  INSTrument:NSELect 83
  INSTrument:NSELect? 83
  INSTrument[:SELect] 82
  INSTrument[:SELect]? 82
  MEASure:CURRent? 84, 87
  MEASure[:VOLTage]? 84
  OUTPut:TRACk[:STATe] 84
  OUTPut:TRACk[:STATe]? 84
  VOLTage 84
  VOLTage:PROTection 86
  VOLTage:PROTection:CLEar 86
  VOLTage:PROTection:STATe 86
  VOLTage:PROTection:STATe? 86
  VOLTage:PROTection:TRIPped? 86
  VOLTage:PROTection? 86
  VOLTage:RANGe 86
  VOLTage:RANGe? 86
  VOLTage:STEP 85
  VOLTage:STEP? 85
  VOLTage:TRIGgered 85
  VOLTage:TRIGgered? 85
  VOLTage? 84
commands(state storage)
  *RCL { 1 | 2 | 3 | 4 | 5 } 93
  *SAV { 1 | 2 | 3 | 4 | 5 } 93
  MEMory:STATe:NAME { 1 | 2 | 3 | 4 | 5} 93
commands(status reporting)
  *CLS 109
  *ESE 109
  *ESE? 109
  *ESR? 110
  *OPC 110
  *OPC? 110
  *PSC { 0 | 1 } 110
  *PSC? 110
  *SRE 110
  *SRE? 110
  *STB? 110
  *WAI 110
  STATus:QUEStionable:ENABle 108
  STATus:QUEStionable:ENABle? 108
  STATus:QUEStionable:INSTrument:ENABle 108
  STATus:QUEStionable:INSTrument:ENABle? 108
  STATus:QUEStionable:INSTrument:ISUMmary<n>:CONDition? 109
  STATus:QUEStionable:INSTrument:ISUMmary<n>:ENABle 109
  STATus:QUEStionable:INSTrument:ISUMmary<n>:ENABle? 109
  STATus:QUEStionable:INSTrument:ISUMmary<n>[:EVENt]? 109
  STATus:QUEStionable:INSTrument[:EVENt]? 108
  STATus:QUEStionable? 108
  SYSTem:ERRor? 108
commands(system-related)
  *IDN? 91
  *RST 92
  *TST? 92
  DISPlay {OFF | ON} 90
  DISPlay:MODE {VI | VV | II} 90
  DISPlay:MODE? 90
  DISPlay:TEXT 90
  DISPlay:TEXT:CLEar 90
  DISPlay:TEXT? 90
  DISPlay? 90
  OUTPut {OFF | ON} 90
  OUTPut:RELay {OFF | ON} 91
  OUTPut:RELay? 91
  OUTPut? 90
  SYSTem:BEEPer 91
  SYSTem:ERRor? 91
  SYSTem:VERSion? 91
commands(triggering)
  *TRG 89
  INITiate 89
  TRIGger:DELay 89
  TRIGger:DELay? 89
  TRIGger:SOURce 89
  TRIGger:SOURce? 89

common commands (IEEE-488.2) 114
common mode current noise 151
connection to a computer or terminal
  DB-25 Serial Connection 63
  DB-9 Serial Connection 62
  GPIB connector 60
connections(power supplies)
  parallel connections 153
  series connections 153
connector
  GPIB 60
  RS-232 (serial) 61
constant current (CC) mode 149, 150
constant current operation 42, 43
constant voltage (CV) mode 149, 150
constant voltage operation 40, 41
cooling 31, 162
coupling effects 36
current limit 42
Current Ratings 32

D

device specific commands 119
dimensions of power supply 163
display mode
  changing mode 45
  I-I display 45, 90
  V-I display 45, 90
  V-V display 45, 90
distribution terminals 36
down-programming response 155
dummy load resistor 34

E

enable register? 98
environmental conditions 163
error conditions 58
error messages 122
error queue 122
error string 122
error trapping 135
errors
  calibration 130
  excution 123
  self-test 129
event register 98
example for calibration 96
example program for C and C 135
example program for Excel 97 139
Excel Macros 139

F

feedback control circuits 147
firmware revision query 59
first-in-first-out (FIFO) order 122
float voltage
  without insulation 30
front panel
  annunciators 5
  key descriptions 3
  layout 2
  operation overview 39
front panel resolution 159
fuse ratings 20

G

GPIB
  connector 60

H

halting an output 116
hierarchical structure 111
HP-IB
  interface configuration 60

I

ideal constant-current power supply 149
ideal constant-voltage power supply 149
ideal power supply 151
IEEE-488
  conformance information 120
IEEE-488.2
  common commands 114
initial inspection
  electrical check 31
  mechanical check 31
input power (maximum) 162
installation 31
interface cable
  DB-25 connector 62
  DB-9 connector 62
  gender changers 62
  GPIB cable 28
  HP 34399A adapter Kit 62
  null-modem adapters 62
  RS-232 cable 28
  wiring adapter 62

K

key descriptions (front panel) 3
keyword(s)
  lower-level 111
  root 111
  second-level 111
  third-level 111
knob locking 56

L

limit mode 39, 40
line regulation 159
line voltage conversion 21
load capacitors 33
load consideration
  capacitive loading 33
  inductive loading 33
  pulse loading 33
  reverse current loading 34
load regulation 159
loop stability 33
low-level commands 77

M

macro 140
message available bit (MAV) 106
meter 39
meter mode 18
MIN and MAX Parameters 113
multiple loads 36
mutual coupling effects 36

N

noise
  common mode 152
  normal mode 152
non-SCPI commands 119
non-volatile memory 50
normal mode voltage noise 151

O

operating temperature 162
output buffer 104
output characteristics 149
output disabling 56
output impedance 149
output programming range 161
output ratings 159
output setting and operation commands 81

output state (on,off) 56
output terminal isolation 162
output voltage overshoot 161
OVP (Overvoltage Protection)
  checking OVP Operation 53
  clearing overvoltage condition 53
  enabling OVP 52
  remote interface operation 54
  setting OVP level 52
  trip level setting 52
OVP accuracy 160

P

parallel connections 153
parameter types (SCPI) 115
performance specifications 159
phase-controlled pre-regulator 147
power-line cord 17
power-line fuse 20
power-on reset (*RST command) 92, 93
power-on state 18
preliminary checkout 17
pre-regulator 147
programming accuracy 159
programming language 162
programming ranges (voltage/current) 79
programming resolution 159

Q

query data 104
query response reading 78
questionable status register 101

R

rack mounting 23
  reference dimension 164
rack-mounting kit 23
readback accuracy 159
readback resolution 159
rear panel
  layout 6
  output terminals 6
  RS-232 interface connector 6
recalling operating states 50
register
  enable register 98
  event register 98
  instrument status register 101
  questionable instrument summary 102
  questionable status 101
  standard event 103
  status byte 104
  status byte summary 104
remote programming 154
remote sensing capability 161
remote voltage sensing
  connections 34
reverse current 34
reverse polarity diode 153
ripple and noise 159
RS-232
  Configuration 61
  Data Frame Format 61
  troubleshooting 63

S

safety information 27
SCPI
  command terminators 114
  confirmed commands 117, 118
  conformance information 117
  device-specific 119
  language introduction 111
  non-SCPI commands 119
  status registers 98
  version 59, 117
  version query 59
SCPI parameters
  Boolean 115
  Discrete 115
  Numeric 115
  String 115
scrolling speed, error text 122
self-test
  complete 17, 58
  power-on 58
  to perform 58
semicolon 113
series element 147
series operation, connection 153
series regulated supply 147
series resistance 147
service request (SRQ) interrupt 105
settling time 160
speed of response
  down programming 155
  up-programming 154
square brackets 71
stability 35, 161
start bits (RS-232) 61
State Storage Memory 162
status byte query (*STB) 106
status reporting commands 108
stop bits (RS-232) 61
storage temperature 162
storing operating states 50
storing power supply states 57
storing state
  assing a name 57
  locations 57
  recall a stored state 57
subsystems 111
supplemental characteristics 161
system firmware revision 59
system-related commands 90

T

temperature coefficient 161
track mode 44
transient response time 160
tree system 111
triangle brackets 71
trigger source
  bus (software) 78
  immediate internal trigger 78
Trigger Source Choices
  Bus (Software) Triggering 87
  Immediate Triggering 88

U

unregulated state (condition) 151
up-programming response 154

V

variable resistor 147
veiwing
  calibration string 45
  errors 45
  firmware revision 45
vertical bar 71
VFD 30
VISA 134
VISA functionality 135
visa.dll 134
visa32.dll 134
Visual Basic 139
Voltage Drops 33
voltage limit 40
voltage spikes 152

W

weight of power supply 163
wire rating 32

Copyright © 2000- 2007
Agilent Technologies
All Rights Reserved.

Printing History
Edition 3, October 2007

New editions are complete revisions of the manual. Update packages, which are issued between editions, may contain additional information and replacement pages which you merge into the manual. The dates on this page change only when a new edition is published.

Trademark Information
Windows, Windows 95, and Windows NT are registered trademarks of Microsoft Corp.

Certification
Agilent Technologies certifies that this product met its published specifications at the time of shipment. Agilent further certifies that its calibration measurements are traceable to the United States National Institute of Standards and Technology (formerly National Bureau of Standards), to the extent allowed by that organization's calibration facility, and to the calibration facilities of other International Standards Organization members.

Warranty
This Agilent product is warranted against defects in materials and workmanship for a period of one year from date of shipment. Duration and conditions of warranty for this product may be superseded when the product is integrated into (becomes a part of) other Agilent products.
During the warranty period, Agilent will, at its option, either repair or replace products which prove to be defective. The warranty period begins on the date of delivery or on the date of installation if installed by Agilent.

Warranty Service
For warranty service or repair, this product must be returned to a service facility designated by Agilent.

For products returned to Agilent for warranty service, the Buyer shall prepay shipping charges to Agilent and Agilent shall pay shipping charges to return the product to the Buyer. However, the Buyer shall pay all shipping charges, duties, and taxes for products returned to Agilent from another country.

Limitation of Warranty
The foregoing warranty shall not apply to defects resulting from improper or inadequate maintenance by the Buyer, Buyer-supplied products or interfacing, unauthorized modification or misuse, operation outside of the environmental specifications for the product, or improper site preparation or maintenance.

The design and implementation of any circuit on this product is the sole responsibility of the Buyer. Agilent does not warrant the Buyer's circuitry or malfunctions of Agilent products that result from the Buyer's circuitry. In addition, Agilent does not warrant any damage that occurs as a result of the Buyer's circuit or any defects that result from Buyer-supplied products.

To the extent allowed by local law, Agilent makes no other warranty, expressed or implied, whether written or oral with respect to this product and specifically disclaims any implied warranty or condition of merchantability, fitness for a particular purpose or satisfactory quality.

For transactions in Australia and New Zealand: The warranty terms contained in this statement, except to the extent lawfully permitted, do not exclude, restrict, or modify and are in addition to the mandatory statutory rights applicable to the sale of this product.

Exclusive Remedies
To the extent allowed by local law, the remedies provided herein are the Buyer's sole and exclusive remedies. Agilent shall not be liable for any direct, indirect, special, incidental, or consequential damages (including lost profit or data), whether based on warranty, contract, tort, or any other legal theory.

Notice
The information contained in this document is subject to change without notice.

To the extent allowed by local law, Agilent makes no warranty of any kind with regard to this material, including, but not limited to, the implied warranties of merchantability and fitness for a particular purpose.

To the extent allowed by local law, Agilent shall not be liable for errors contained herein or for incidental or consequential damages in connection with the furnishing, performance, or use of this material. No part of this document may be photocopied, reproduced, or translated to another language without the prior written consent of Agilent.

Restricted Rights
The Software and Documentation have been developed entirely at private expense. They are delivered and licensed as "commercial computer software" as defined in DFARS 252.227-7013 (Oct 1988), DFARS 252.211-7015 (May 1991), or DFARS 252.227-7014 (Jun 1995), as a "commercial item" as defined in FAR 2.101(a), or as "restricted computer software" as defined in FAR 52.227-19 (Jun 1987) (or any equivalent agency regulation or contract clause), whichever is applicable. You have only those rights provided for such Software and Documentation by the applicable FAR or DFARS clause or the Agilent standard software agreement for the product involved.

Safety Information
Do not install substitute parts or perform any unauthorized modification to the product. Return the product to an HP Sales and Service Office for service and repair to ensure that safety features are maintained.

Safety Symbols

Warning
Calls attention to a procedure, practice, or condition, that could possibly cause bodily injury or death.

Caution
Calls attention to a procedure, practice, or condition that could possibly cause damage to equipment or permanent loss of data.



Earth ground symbol.

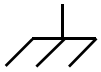

Chassis ground symbol.



Refer to the manual for specific Warning or Caution information to avoid personal injury or equipment damage.
Hazardous voltages may be present.

Warning

No operator serviceable parts inside. Refer servicing to service-trained personnel.

Warning

For continued protection against fire, replace the line fuse only with a fuse of the specified type and rating.

Manual Part Number: E3646-90001

Printed: October 2007 Edition 3
Printed in Malaysia

Agilent Technologies	**DECLARATION OF CONFORMITY** According to ISO/IEC Guide 22 and CEN/CENELEC EN 45014	CE

Manufacturer's Name and Addresss

Responsible Party
Agilent Technologies, Inc.
550 Clark Drive, Suite 101
Budd Lake, New Jersey 07828
USA

Alternate Manufacturing Site
Agilent Technologies (Malaysia) Sdn. Bhd
Malaysia Manufacturing
Bayan Lepas Free Industrial Zone, PH III
11900 Penang,
Malaysia

Declares under sole responsibility that the product as originally delivered

Product Name:	a) Single Output dc Power Supplies b) Multiple Output dc Power Supplies c) Single Output System Power Supply
Model Number:	a) E3640A, E3641A, E3642A, E3643A, E3644A, E3645A b) E3646A, E3647A, E3648A, E3649A c) E3633A, E3634A
Product Options:	This declaration covers all options of the above product(s).

Complies with the essential requirements of the Low Voltage Directive 73/23/EEC and the EMC Directive 89/336/EEC (including 93/68/EEC) and carries the CE Marking accordingly.

EMC Information ISM Group 1 Class A Emissions

As detailed in	Electromagnetic Compatibility (EMC), Certificate of Conformance Number CC/TCF/00/102 based on Technical Construction File (TCF) ANJ12, dated Dec 20, 2000.
Assessed by:	Celestica Ltd, Appointed Competent Body Westfields House, West Avenue Kidsgrove, Stoke-on-Trent Straffordshire, ST7 1TL United Kingdom

Safety Information and Conforms to the following safety standards.

IEC 61010-1:2001 / EN 61010-1:2001
CSA C22.2 No. 1010.1:1992

This DoC applies to above-listed products placed on the EU market after:

January 1, 2004
Date

Bill Darcy/ Regulations Manager

For further information, please contact your local Agilent Technologies sales office, agent or distributor, or
Agilent Technologies Deutschland GmbH, Herrenberger Strabe 130, D71034 Böblingen, Germany

www.agilent.com

Contact us

To obtain service, warranty or technical support assistance, contact us at the following phone numbers:

United States:
(tel) 800 829 4444 (fax) 800 829 4433
Canada:
(tel) 877 894 4414 (fax) 800 746 4866
China:
(tel) 800 810 0189 (fax) 800 820 2816
Europe:
(tel) 31 20 547 2111
Japan:
(tel) (81) 426 56 7832 (fax) (81) 426 56 7840
Korea:
(tel) (080) 769 0800 (fax) (080) 769 0900
Latin America:
(tel) (305) 269 7500
Taiwan:
(tel) 0800 047 866 (fax) 0800 286 331
Other Asia Pacific Countries:
(tel) (65) 6375 8100 (fax) (65) 6755 0042

Or visit Agilent worlwide Web at:
www.agilent.com/find/assist

Product specifications and descriptions in this document are subject to change without notice.

© Agilent Technologies, Inc. 2000-2009

Printed in Malaysia
Fourth Edition, 1 May 2009

E3646-90001



Agilent Technologies