E30467

Filter cover for pressure sensors

HOSE BARB COVER FILTER SYSTEM

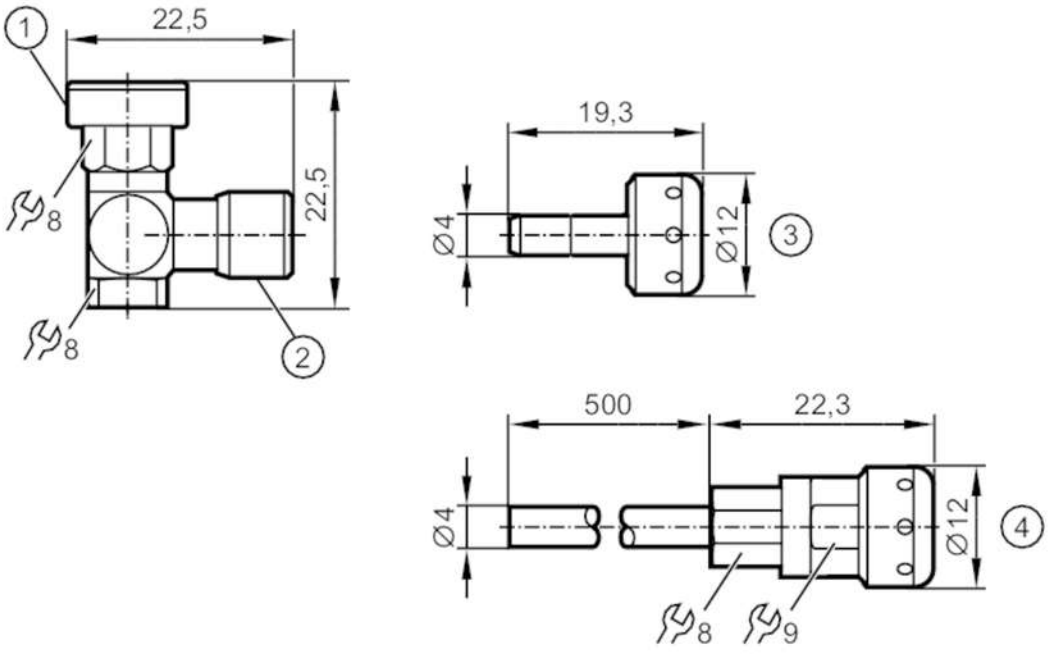

1 Sensor connection
2 connector rotatable
3 connector with integrated ventilation diaphragm
4 connector with integrated ventilation diaphragm and pneumatic tube

Mechanical data		
Weight	[g]	44.4
Materials		stainless steel (1.4404 / 316L); stainless steel (1.4301 / 304); stainless steel (1.4307 / 304L); FKM; PE; PTFE; PU
Tightening torque	[Nm]	2.5...3.5; (recommended tightening torque)
Accessories		
Items supplied		Filter cover including ventilation diaphragm and O-ring
		tubing: 0,5 m, Polyurethan
Remarks		
Pack quantity		1 pcs.