Part Number:	**BU-21APN/BU-21APS** **BU-21CPN/BU-21CPS**
Description:	**Heavy Duty Clip for Battery and Test Work**

3007

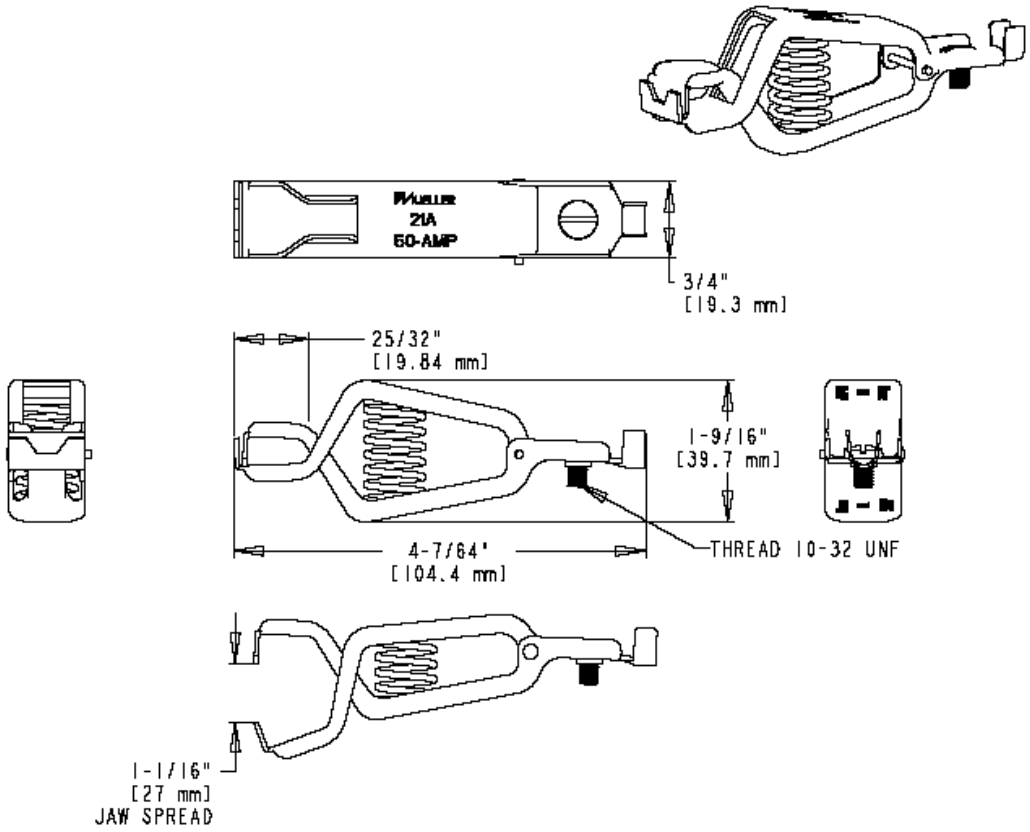

- Automotive clip Heavy Duty Clip for Battery and Test Work
- Crimp or screw connection; copper version (21c) equipped with removable copper lug; jaw opens 1.06”(27mm) max; clip unmarked (BU-21APN/CPN) and marked positive (BU-21APS/CPS)
- Material: BU-21A -- zinc-plated steel; BU-21C -- solid copper
  Spring: Steel
- Length: 4.11” (104.4 mm)
- Rating:
  - 50 Amps – BU-21A
  - 100 Amps – BU-21C
- Use BU-26 PVC insulator for this clip
- Federal Spec: CID AA59466-010 (BU-21CPN)
- Packaged in Bulk
- RoHS Compliant

Mueller Electric Company
1625 E. 31st Street
Cleveland, Ohio 44114

ISO 9001:2000
Over 95 Years Of Innovation
www.muellerelectric.com

TEL. 800-955-2629
TEL. 216-771-5225
FAX. 216-771-3068