Product Data Sheet 412/2-036

ebmpapst

The engineer's choice



GREEN TECH

412/2-036
INDEX

1 General 3

2 Mechanics 3

2.1 General 3
2.2 Connections 3

3 Operating Data 5

3.1 Electrical Operating Data 5
3.2 Operating Data - Electrical Interface - Output 6
3.3 Electrical Features 7
3.4 Aerodynamics 8
3.5 Sound Data 9

4 Environment 9

4.1 General 9
4.2 Climatic Requirements 9

5 Safety 10

5.1 Electrical Safety 10
5.2 Approval Tests 10

6 Reliability 10

6.1 General 10

1 General

Fan type	Fan	
Rotating direction looking at rotor	Counterclockwise	
Airflow direction	Air outlet over struts	
Bearing system	Sleeve bearing	
Mounting position - shaft	Any	

2 Mechanics

2.1 General

Width	40,0 mm	
Height	40,0 mm	
Depth	20,0 mm	
Mass	0,027 kg	
Housing material	Plastic	
Impeller material	Plastic	
Max. torque when mounted across both mounting flanges Screw size	wire outlet corner: 80 Ncm remaining corners: 90 Ncm ISO 4762 - M4 degreased, without an additional brace and without washer	

2.2 Connections

Electrical connection	Wires - Plug	
Lead wire length Tolerance	L = 300 mm +- 10,0 mm	
Wire size (AWG)	28	
Insulation diameter	0,98 mm	
Contact	See drawing	

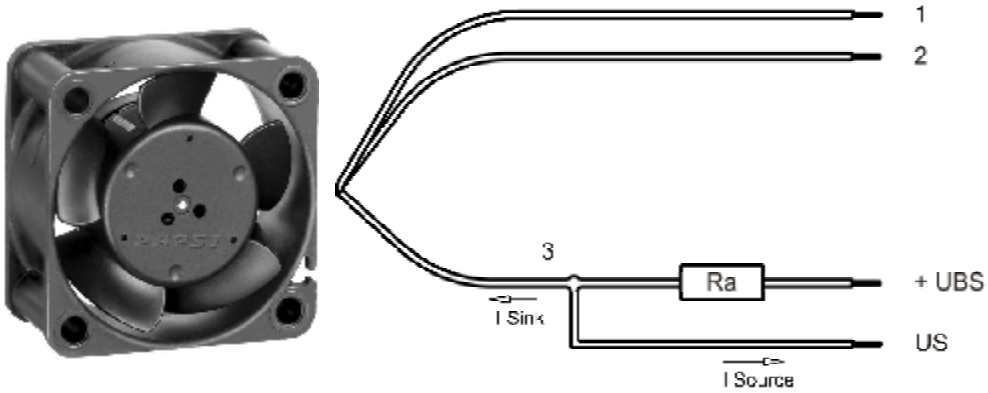

Wire	Colour	Operation
1	red	+ UB
2	blue	- GND
3	white	Tacho

The auxilliaries shown on the schematic diagram (which are required for the intended use) are not part of our delivery.

3 Operating Data

3.1 Electrical Operating Data

Measurement conditions: Normal air density = 1,2 kg/m3; Temperature 23°C +/- 3°C; Motor axis horizontal; warm-up time before measuring 5 minutes (unless otherwise specified). In the intake and outlet area should not be any solid obstruction within 0,5 m.

Δp = 0: corresp. to free air flow (see section 3.5)
I: corresp. to arithm. mean current value

Features	Condition	Symbol	Values		
Voltage range		U	10 V		14 V
Nominal voltage		U_N		12 V	
Power consumption Tolerance	Δp = 0 0010	P	0,5 W +- 17,5 %	1 W +- 12,5 %	1 W +- 17,5 %
Current consumption Tolerance	Δp = 0 0010	I	50 mA +- 17,5 %	80 mA +- 12,5 %	70 mA +- 17,5 %
Speed Tolerance	Δp = 0 0010	n	4.750 1/min +- 15 %	6.000 1/min +- 10 %	6.800 1/min +- 15 %

3.2 Operating Data - Electrical Interface - Output

Tacho type	/2 (open collector)

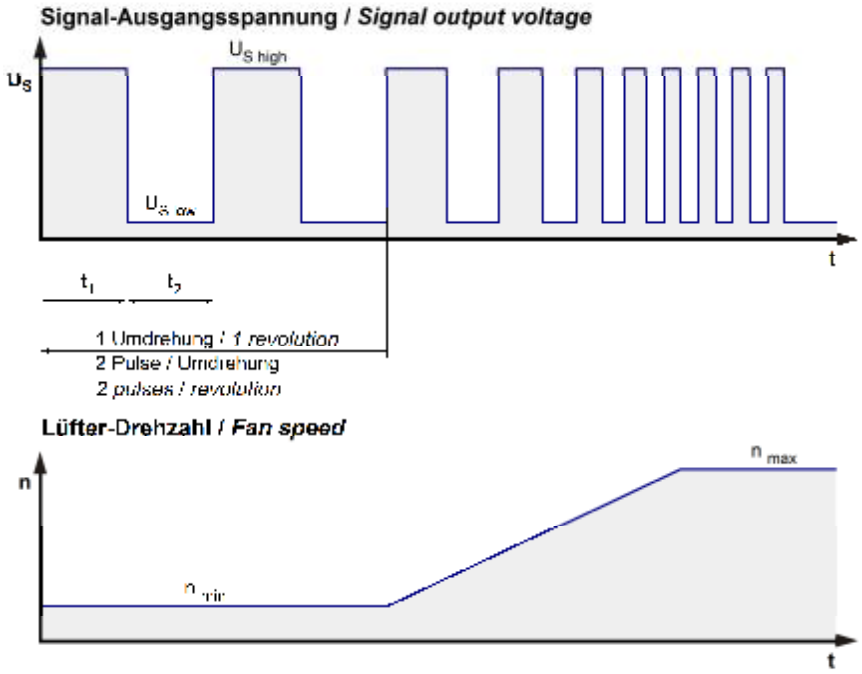

$$Ra = \frac{U_{BS} - U_{S\,low}}{I_{sink}}$$

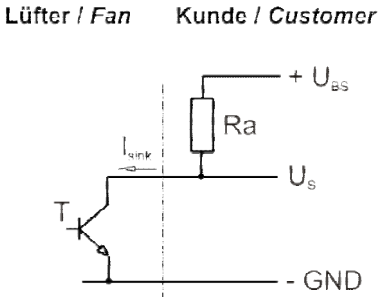

Features	Note	Values
Tacho operating voltage (UBS)		<= 30 V
Tacho signal Low	I sink: 1 mA	<= 0,4 V
Tacho signal High	I source: 0 mA	<= 30 V
Maximum sink current		<= 2 mA
External resistor	External resistor Ra from UBS to US required. All voltages measured to GND.	
Tacho frequency	(2 x n) / 60	
Tacho isolated from motor	No	
Slew rate		=> 0,5 V/us

3.3 Electrical Features

Electronic function	None	
Reversed polarity protection Max. residual current at U_N	Rectifying diode I_F <= 30 nA	
Locked rotor protection	Impedance protected	
Locked rotor current at U_N	I_{block}	

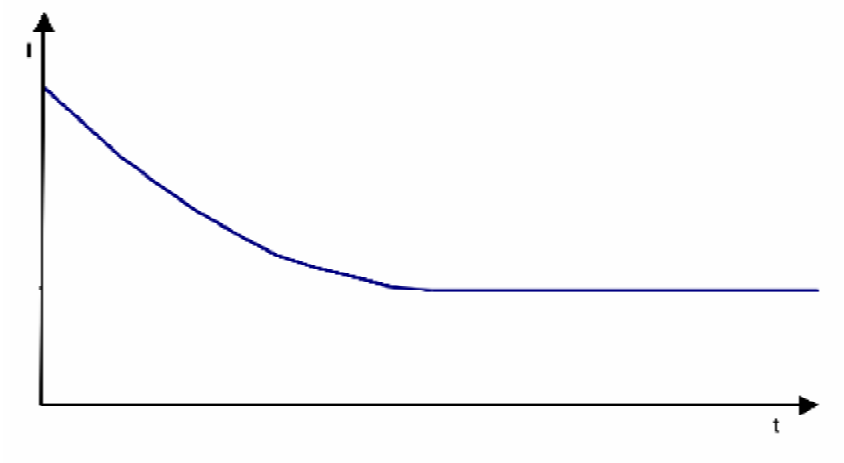

3.4 Aerodynamics

Measurement conditions:	Measured with a double chamber intake rig. Normal air density = 1,2 kg/m3; Temperature 23°C +/- 3°C; In the intake and outlet area should not be any solid obstruction within 0,5 m. The information is only valid under the specified test conditions and may be changed by the installation conditions. If there are deviations from the standard test conditions, the characteristic values must be checked under the installed conditions.

a.) Operation condition:

6.000 1/min at free air flow

Max. free-air flow (Δp = 0 / $\dot{V}$ = max.)	10,0 m3/h	
Max. static pressure (Δp = max. / $\dot{V}$ =0)	41 Pa	



3.5 Sound Data

Measurement conditions:	Sound pressure level: 1 Meter distance between microphone and the air intake. Sound power level: Acc. to DIN 45635 part 38 (ISO 10302) Measured in a semianchoic chamber with a background noise level of Lp(A) < 5 dB(A) For further measurement conditions see section 3.5

a.) Operation condition:

6.000 1/min at free air flow

Optimal operating point	9,0 m3/h @ 5 Pa	
Sound power level at the optimal operating point	4,1 bel(A)	
Sound pressure level at free air flow, measured in rubber bands	20,0 dB(A)	

4 Environment

4.1 General

Min. permitted ambient temperature TU min.	-20 °C	
Max. permitted ambient temperature TU max.	70 °C	
Min. permitted storage temperature TL min.	-40 °C	
Max. permitted storage temperature TL max.	80 °C	

4.2 Climatic Requirements

Humidity requirements	humid heat, constant; according to DIN EN 60068-2-78, 14 days	
Water exposure	None	
Dust requirements	None	
Salt fog requirements	None	

*) Permittet application area:
The product is intended for use in sheltered rooms with controlled temperature and controlled humidity. Directly exposure to water must be avoided.

Pollution degree 1 (according DIN EN 60664-1)
There is either no pollution or it occurs only dry, non-conductive pollution. The pollution has no negative impact.

Please require severity levels and specification parameters from the responsible development departments

5 Safety

5.1 Electrical Safety

Dielectric strength DIN EN 60950 (VDE 0805) and DIN EN 60335 (VDE 0700) A.) Type test Measuring conditions: After 48h of storage at 95% R.H. and 25°C. No arcing or breakdown is allowed! All connections together to ground. B.) Routine test Measuring conditions: At indoor climate. No arcing or breakdown is allowed! All connections together to ground.	 Not applicable Not applicable	
Isolation resistance Measuring conditions: After 48h of storage at 95% R.H. and 25°C measured with U=500 VDC for 1 min.	RI > 10 MOhm	
clearance / creepage distance	1,0 mm / 1,2 mm	
Protection class	III	

5.2 Approval Tests

CE	EC Declaration of Conformity	Yes
EAC	Eurasian Conformity	Yes
UL	Underwriters Laboratories	Yes / UL507, Electric Fans
VDE	Association for Electrical, Electronic and Information Technologies	Yes / Approval acc. to EN 60950 (VDE 0805) - Information technology equipment
CSA	Canadian Standards Association	Yes / C22.2 No. 113 Fans and Ventilators
CCC	China Compulsory Certification	No

The approval tests are observed to:
U approval max.:14,0 V @ TU approval max.: 70,0 °C

6 Reliability

6.1 General

Life expectancy L10 at TU = 20 °C	50.000 h	
Life expectancy L10 at TU = 40 °C	31.500 h	
Life expectancy L10 at TU = 60 °C	20.000 h	
Life expectancy L10 at TU max.	15.000 h	
Life expectancy L10 acc. to IPC 9591 at TU = 40 °C	52.500 h	

Copying of this document, and giving it to others and the use or communication of the contents thereof, are forbidden without express authority. Offenders are liable to the payment of damages. All rights are reserved in the event of the grant of a patent or the registration of a utility model or design.

Schutzvermerk nach DIN ISO 16016 beachten/
Refer to protection notice DIN ISO 16016

1x Steckergehäuse
22-01-2035 von Molex

3x Kontakt
08-50-0113 von Molex

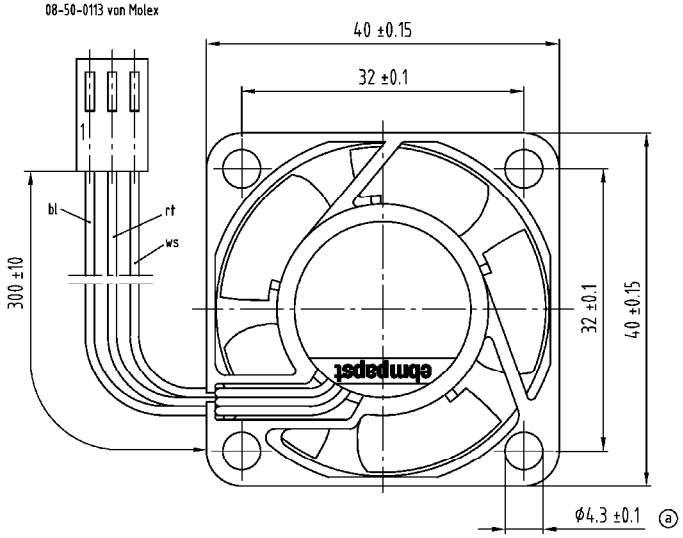

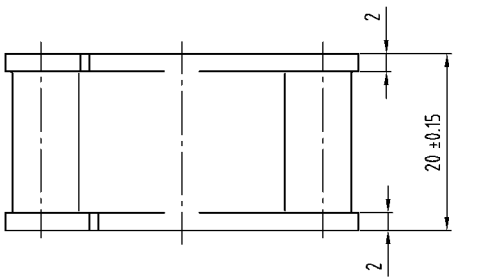

			ebmpapst	Werkstoff/Material:	Volumen/Volume [mm³]:
SAP-Status/State	Aend.-Nr./Change-No.	AutoCAD-System-Version	CAD-Umgebung/ CAD-Environment		Gewicht/Mass [g]:
		Datum/Date	Name/Name		
Tolerierung/Tolerances:		Bearb./ Drawn		Artikel/Title	
Allgemeintoleranzen/Gen. tolerances:		Gepr./ Checked			
		Freig./ Releas.			
		ebmpapst		Zchg.-Nr./ Drawing.-No.:	Ers.f.Zchg./ Replaces:
		ebm-papst St. Georgen GmbH & Co. KG		Dokumenttyp/Type of Document / Teildokument (Blatt)/Page / Index/Index: A / Format/Size / Massstab/scale	

11/09