Datasheet - TV10S 335-11Z

Safety switch for hinged guards / Hinge safety switch / TV.S 335



(Minor differences between the printed image and the original product may exist!)

- Metal enclosure
- Good resistance to oil and petroleum spirit
- Actuator heads can be repositioned by 4 x 90°
- 40,5 mm x 107 mm x 65,3 mm
- Actuator shaft can be turned 360°
- 1 Cable entry M 20 x 1.5
- LED version available

Ordering details

Product type description	TV10S 335-11Z
Article number	1160104
EAN code	4030661188874

Approval

Approval	BG USA/CAN CCC

Classification

Standards	EN ISO 13849-1
B_{10d} Opener (NC)	20.000.000
Mission time	20 Years
notice	$MTTF_d = \frac{B_{10d}}{0,1 \times n_{op}}$ $n_{op} = \frac{d_{op} \times h_{op} \times 3600\ s/h}{t_{zyklus}}$

Global Properties

Product name	TV.S 335
Standards	EN 60947-5-1, BG-GS-ET-15
Compliance with the Directives (Y/N) CE	Yes
Materials	
- Material of the housings	Aluminium
- Material of the contacts	Silver
Housing coating	painted
Weight	260 g

Mechanical data

Design of electrical connection	Screw connection
Cable entry M 20 x 1.5	1
Cable section	
- Min. Cable section	0,75 mm²
- Max. Cable section	2.5 mm²
Mechanical life	> 1.000.000 operations
Switching frequency	max. 1000/h
Design of actuating element	Other
Shaft bore	Ø 10 mm
Positive break angle	7°
Positive break torque	60 Ncm
notice	All indications about the cable section are including the conductor ferrules.

Ambient conditions

Ambient temperature	
- Min. environmental temperature	- 25°C
- Max. environmental temperature	+ 70°C
Protection class	IP67

Electrical data

Design of control element	Normally open contact (NO), Opener (NC)
Switching principle	Creep circuit element
Number of auxiliary contacts	1 piece
Number of safety contacts	1 piece
Rated impulse withstand voltage U_{imp}	6 kV
Rated insulation voltage U_i	500 V
Thermal test current I_{the}	10 A
Utilisation category	AC-15: 230 V / 4 A, DC-13: 24 V / 4 A
Max. fuse rating	6 A gG D-fuse

ATEX

Explosion protection categories for gases	None
Explosion protected category for dusts	None

Dimensions

Dimensions of the sensor

- Width of sensor	40.5 mm
- Height of sensor	107 mm
- Length of sensor	65.3 mm

notice

Setting assistance	Grub screw for location, shaft pre-drilled for pin

Universal joint available to compensate for axial displacement (only for shaft bore 10 mm)

By turning the head in 90° steps, 8 actuating planes are possible. A Torx T10 screwdriver is needed for this purpose.
Even when the screw is removed, the head is self-retaining. The switch can still not be tampered.

Diagram

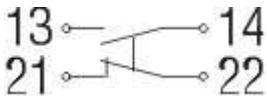

Note Diagram

positive break NC contact

active

no active

Normally-open contact

Normally-closed contact

Switch travel diagram

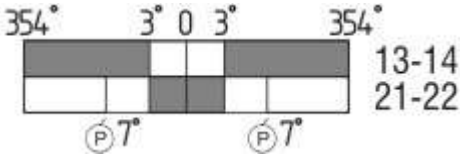

Notes Switch travel diagram

Contact closed

Contact open

Setting range

Break point

Positive opening sequence/- angle

VS adjustable range of NO contact
VÖ adjustable range of NC contact
N after travel

Ordering suffix

The applicable ordering suffix is added at the end of the part number of the safety switch.
Order example: TV10S 335-11Z**-NPT**

...**-NPT**	Cable entry NPT 1/2“
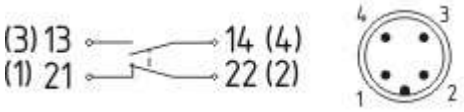 ...**-ST**	M12 connector with A-coding Rated impulse withstand voltage U_{imp}: 0,8 kV Rated insulation voltage U_i: 50 V Operating current I_e: AC-15: 50 V / 4 A Caution! The versions with connector may only be used in PELV circuits to EN 60204-1.

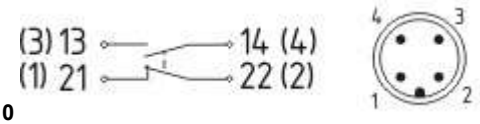

...**-2310**

M12 connector with B-coding
Rated impulse withstand voltage U_{imp}: 0,8 kV
Rated insulation voltage U_i: 50 V
Operating current I_e: AC-15: 50 V / 4 A
Caution! The versions with connector may only be used in PELV circuits to EN 60204-1.

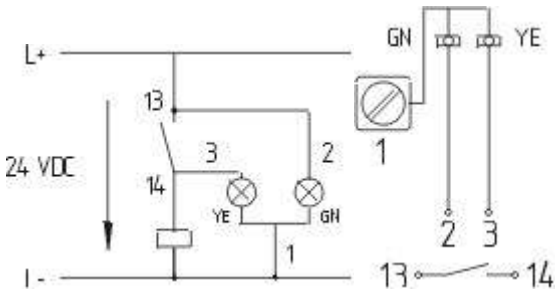

...**-G24**

only available for version with one NO and one NC contact.
Protected against incorrect polarity and voltage spikes.

Ordering code

TV**(1)**S 335-**(2)**Z-**(3)**

(1)

8	Shaft bore Ø 8 mm
10	Shaft bore Ø 10 mm

(2)

02	2 Opener (NC)
03	3 Opener (NC)
11	1 Normally open contact (NO) / 1 Opener (NC)
12	1 Normally open contact (NO) / 2 Opener (NC)

(3)

without	Cable entry M20
NPT	cable entry NPT 1/2"
ST	M12 connector with A-coding *(Caution! The versions with connector may only be used in PELV circuits to EN 60204-1.)*
2310	M12 connector with B-coding *(Caution! The versions with connector may only be used in PELV circuits to EN 60204-1.)*
G24	with LED *(only available for version with one NO and one NC contact.)*

Documents

Operating instructions and Declaration of conformity (de) 763 kB, 26.02.2010
http://127.0.0.1/Bilddata/Drehbar/Pdf/Tv335_55/bedien/de/mrl_tvs335-355_de.pdf

Operating instructions and Declaration of conformity (en) 775 kB, 26.02.2010
http://127.0.0.1/Bilddata/Drehbar/Pdf/Tv335_55/bedien/en/mrl_tvs335-355_en.pdf

BG-test certificate (en) 200 kB, 01.06.2010
http://127.0.0.1/Bilddata/Drehbar/Pdf/Tv335_55/baumuste/z_tvsp02.pdf

BG-test certificate (de) 201 kB, 01.06.2010
http://127.0.0.1/Bilddata/Drehbar/Pdf/Tv335_55/baumuste/z_tvsp01.pdf

CCC certification (en) 577 kB, 12.12.2006
http://127.0.0.1/Bilddata/Drehbar/Pdf/Tv335_55/zertifikat/q_349p02.pdf

CCC certification (cn) 609 kB, 12.12.2006
http://127.0.0.1/Bilddata/Drehbar/Pdf/Tv335_55/zertifikat/q_349p03.pdf

Images

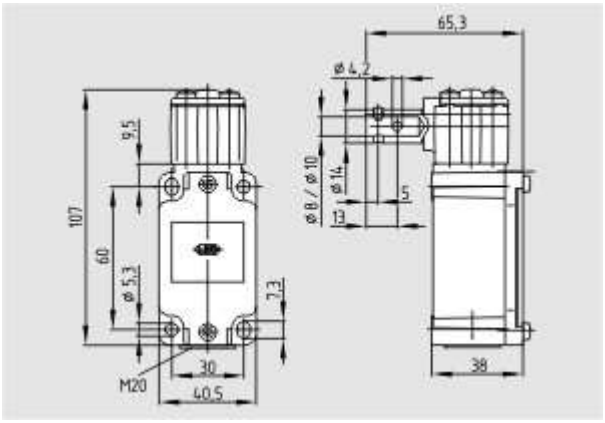

Dimensional drawing (basic component)

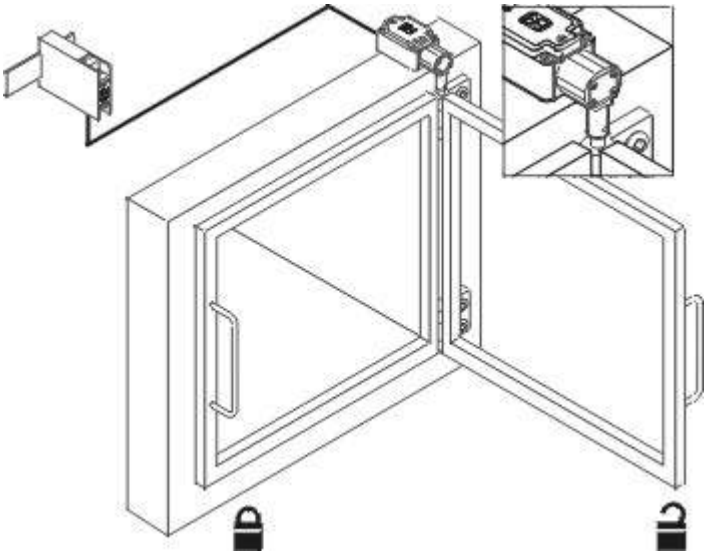
Application