efector100

ID5055

IDC3050BBPKG/2LED/US-100-DPS

Inductive sensors

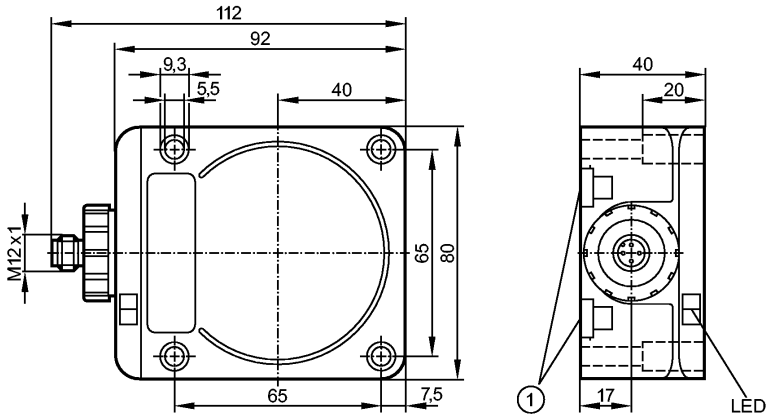

1: Mounting on DIN rail

Made in Germany

Product characteristics		
Inductive sensor		
Rectangular, plastics		
Connector		
Sensing range 50 mm; [f] flush mountable		
Electrical data		
Electrical design		DC PNP
Operating voltage	[V]	10...36 DC
Current consumption	[mA]	< 15 (24 V)
Protection class		II
Reverse polarity protection		yes
Outputs		
Output function		normally open
Voltage drop	[V]	< 2.5
Current rating	[mA]	250
Short-circuit protection		pulsed
Overload protection		yes
Switching frequency	[Hz]	70
Range		
Sensing range	[mm]	50
Operating distance	[mm]	0...40.5; when mounted flush with steel (ST37)
Accuracy / deviations		
Correction factors		mild steel = 1 / stainless steel approx. 0.85 / brass approx. 0.48 / aluminium approx. 0.46 / copper approx. 0.38
Hysteresis	[% of Sr]	3...20
Switch-point drift	[% of Sr]	-15...15
Environment		
Ambient temperature	[°C]	-25...70
Protection		IP 67
Tests / approvals		
EMC		EN 60947-5-2
MTTF	[Years]	1588
Mechanical data		

efector100

ID5055

IDC3050BBPKG/2LED/US-100-DPS

Inductive sensors

Mounting		flush mountable
Housing materials		PPE; diecast zinc nickel-plated
Installation		rail TH35 (to EN 60715)
Weight	[kg]	0.417
Displays / operating elements		
Output status indication	LED	yellow
Operation	LED	green
Electrical connection		
Connection		M12 connector

Wiring



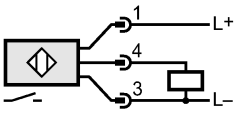

Accessories		
Accessories (included)		sealing plug
Remarks		
Pack quantity	[piece]	1