PQ0834

Pressure sensor for pneumatics

PQ-010-RHR18-QFNKG/AS/

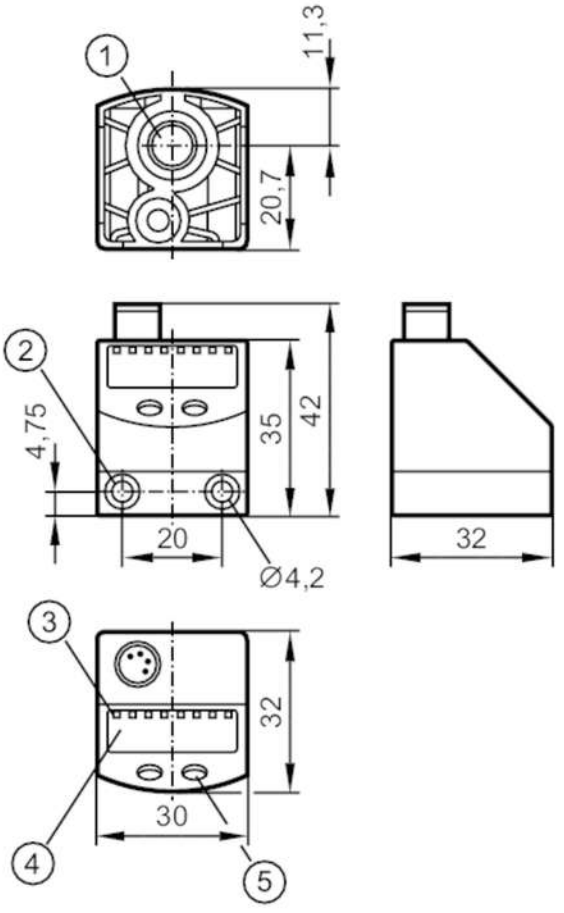

1 main pressure connection G 1/8 Tightening torque < 8 Nm insertion depth < 7.5 mm
2 Tightening torque < 0.5 Nm
3 LEDs Display unit / switching status
4 alphanumeric display 4-digit
5 programming button

Product characteristics		
Number of inputs and outputs		Number of digital outputs: 2
Measuring range	[bar]	-1...10
Process connection		threaded connection G 1/8 internal thread

Application			
Special feature		Gold-plated contacts	
Application		for industrial applications	
Media		compressed air	
Conditionally suitable for		other media on request	
Medium temperature	[°C]	0...60	
Min. bursting pressure		30 bar	3 MPa
Pressure rating		20 bar	2 MPa
Type of pressure		relative pressure; vacuum	

PQ0834

Pressure sensor for pneumatics

PQ-010-RHR18-QFNKG/AS/

Electrical data		
Operating voltage	[V]	18...32 DC; (to SELV/PELV)
Current consumption	[mA]	< 50
Min. insulation resistance	[MΩ]	100; (500 V DC)
Protection class		III
Reverse polarity protection		yes
Overvoltage protection		yes; (< 40 V)
Power-on delay time	[s]	0.3
Integrated watchdog		yes
Inputs / outputs		
Number of inputs and outputs		Number of digital outputs: 2
Outputs		
Total number of outputs		2
Output signal		switching signal
Electrical design		NPN
Number of digital outputs		2
Output function		normally open / normally closed; (parameterisable)
Max. voltage drop switching output DC	[V]	2
Permanent current rating of switching output DC	[mA]	100
Switching frequency DC	[Hz]	< 200
Short-circuit protection		yes
Type of short-circuit protection		pulsed
Measuring/setting range		
Measuring range	[bar]	-1...10
Set point SP	[bar]	-0.9...10
Reset point rP	[bar]	-0.95...9.95
In steps of	[bar]	0.05
Accuracy / deviations		
Switch point accuracy	[% of the span]	< ± 0,5
Repeatability	[% of the span]	< ± 0,1; (with temperature fluctuations < 10 K)
Characteristics deviation	[% of the span]	< ± 0,25 (BFSL) / < ± 0,5 (LS); (BFSL = Best Fit Straight Line; LS = limit value setting)
Hysteresis deviation	[% of the span]	< ± 0,25
Long-term stability	[% of the span]	< ± 0,05; (per 6 months)
Temperature coefficient zero point	[% of the span / 10 K]	0,2; (0...60 °C)
Temperature coefficient span	[% of the span / 10 K]	0,2; (0...60 °C)

PQ0834

Pressure sensor for pneumatics

PQ-010-RHR18-QFNKG/AS/

Response times			
Response time	[ms]	< 2.5	
Delay time programmable dS, dr	[s]	0; 0,002...5	
Software / programming			
Parameter setting options		hysteresis / window; normally open / normally closed; diagnostic function; switching logic; switch-on/switch-off delay; Damping; Display unit	
Operating conditions			
Ambient temperature	[°C]	0...70	
Storage temperature	[°C]	-25...85	
Protection		IP 65	
Tests / approvals			
EMC		EN 61000-4-2 ESD	4 kV CD / 8 kV AD
		EN 61000-4-3 HF radiated	10 V/m
		EN 61000-4-4 Burst	2 kV
		EN 61000-4-5 Surge	0,5/1 kV
		EN 61000-4-6 HF conducted	10 V
Shock resistance		DIN IEC 68-2-27	50 g (11 ms)
Vibration resistance		DIN IEC 68-2-6	20 g (10...2000 Hz)
MTTF	[years]	443	
Pressure Equipment Directive		Sound engineering practice; can be used for group 2 fluids; group 1 fluids on request	
Mechanical data			
Weight	[g]	85.5	
Housing		rectangular	
Dimensions	[mm]	42 x 30 x 32	
Materials		PBT; FKM; polyester	
Materials (wetted parts)		brass; FKM; silicon (coated); PBT	
Min. pressure cycles		50 million	
Process connection		threaded connection G 1/8 internal thread	
Displays / operating elements			
Display		Display unit	4 x LED, green
		switching status	2 x LED, yellow
		function display	alphanumeric display, 4-digit
		measured values	alphanumeric display, 4-digit
Display unit		bar; kPa; psi; inHg	
Accessories			
Accessories (optional)		mounting set for DIN rail: TH 35-7,5 / EN60715, E37340	
		Thread extension: 1/8", E30075	
		push-in air fitting for tube: Ø 6 mm, E30076	
		push-in air fitting for tube: Ø 8 mm, E30077	
Remarks			
Pack quantity		1 pcs.	

PQ0834

Pressure sensor for pneumatics

PQ-010-RHR18-QFNKG/AS/

Electrical connection

Connector: 1 x M8; coding: A; Contacts: gold-plated



Connection

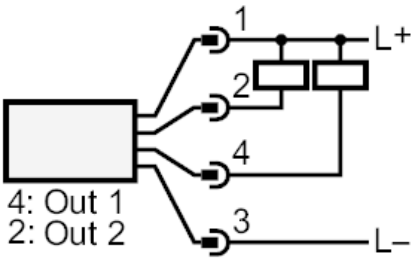

OUT1	switching output
OUT2	switching output
	Diagnostic output