# DATASHEET - DILEM-10(230V50/60HZ)



**Contactor, 230 V 50/60 Hz, 3 pole, 380 V 400 V, 4 kW, Contacts N/O = Normally open= 1 N/O, Screw terminals, AC operation**

| | |
|---|---|
| **Part no.** | **DILEM-10(230V50/60HZ)** |
| **Catalog No.** | **052302** |
| **Alternate Catalog No.** | **XTMC9A10G2** |

## Delivery program

| | | | |
|---|---|---|---|
| Product range | | | Contactors |
| Application | | | Mini Contactors for Motors and Resistive Loads |
| Subrange | | | DILEM contactors |
| Utilization category | | | AC-1: Non-inductive or slightly inductive loads, resistance furnaces<br>AC-3/AC-3e: Normal AC induction motors: Starting, switching off while running<br>AC-4: Normal AC induction motors: starting, plugging, reversing, inching |
| | | | IE3 |
| Notes | | | Also suitable for motors with efficiency class IE3.<br>Also tested according to AC-3e. |
| Connection technique | | | Screw terminals |
| Description | | | With auxiliary contact |
| Number of poles | | | 3 pole |
| **Rated operational current** | | | |
| AC-3 | | | |
| 380 V 400 V | $I_e$ | A | 9 |
| AC-1 | | | |
| Conventional free air thermal current, 3 pole, 50 - 60 Hz | | | |
| Open | | | |
| at 40 °C | $I_{th} = I_e$ | A | 22 |
| **Max. rating for three-phase motors, 50 - 60 Hz** | | | |
| AC-3 | | | |
| 220 V 230 V | P | kW | 2.2 |
| 380 V 400 V | P | kW | 4 |
| 660 V 690 V | P | kW | 4 |
| AC-4 | | | |
| 220 V 230 V | P | kW | 1.5 |
| 380 V 400 V | P | kW | 3 |
| 660 V 690 V | P | kW | 3 |
| **Contacts** | | | |
| N/O = Normally open | | | 1 N/O |
| Contact sequence | | | 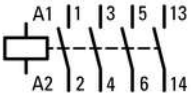 |
| For use with | | | …DILEM<br>…DILE |
| Actuating voltage | | | 230 V 50/60 Hz |
| Voltage AC/DC | | | AC operation |

## Technical data

### General

| | | | |
|---|---|---|---|
| Standards | | | IEC/EN 60947, VDE 0660, CSA, UL |
| Lifespan, mechanical; Coil 50/60 Hz | Operations | x $10^6$ | 7 |
| Lifespan, mechanical | Operations | x $10^6$ | 10 |
| Maximum operating frequency | | | |

| | | | |
|---|---|---|---|
| Mechanical | | Ops./h | 9000 |
| electrical (Contactors without overload relay) | Operations/h | | Page 05/070 |
| Climatic proofing | | | Damp heat, constant, to IEC 60068-2-78<br>Damp heat, cyclic, to IEC 60068-2-30 |
| Ambient temperature | | | |
| Open | | °C | -25 - +50 |
| Enclosed | | °C | - 25 - 40 |
| Storage | | °C | |
| Min. ambient temperature, storage | | °C | - 40 |
| Ambient temperature, storage max. | | °C | + 80 |
| Mounting position | | | As required, except vertical with terminals A1/A2 at the bottom |
| Mounting position | | | 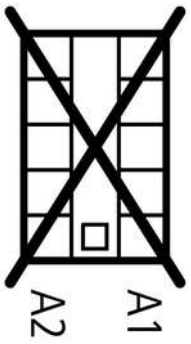 |
| Mechanical shock resistance (IEC/EN 60068-2-27) | | | |
| Half-sinusoidal shock, 10 ms | | | |
| Basic unit without auxiliary contact module | | | |
| Main contacts, make contacts | | g | 10 |
| Main contacts Make/break contacts | | g | |
| Make | | g | 8 |
| Basic unit with auxiliary contact module | | | |
| Main contacts make contact | | g | |
| Make | | g | 10 |
| Auxiliary contacts Make/break contacts | | g | 20 / 20 |
| Degree of Protection | | | IP20 |
| Protection against direct contact when actuated from front (EN 50274) | | | Finger and back-of-hand proof |
| Altitude | | m | Max. 2000 |
| Weight | | kg | 0.17 |
| Terminal capacity of auxiliary and main contacts | | | |
| Screw terminals | | | |
| Solid | | $mm^2$ | 1 x (0.75 - 2.5)<br>2 x (0.75 - 2.5) |
| Flexible with ferrule | | $mm^2$ | 1 x (0.75 - 1.5)<br>2 x (0.75 - 1.5) |
| Solid or stranded | | AWG | 18 - 14 |
| Stripping length | | mm | 8 |
| Terminal screw | | | M3.5 |
| Pozidriv screwdriver | | Size | 2 |
| Standard screwdriver | | mm | 0.8 x 5.5<br>1 x 6 |
| Max. tightening torque | | Nm | 1.2 |

## Main conducting paths

| | | | |
|---|---|---|---|
| Rated impulse withstand voltage | $U_{imp}$ | V AC | 6000 |
| Overvoltage category/pollution degree | | | III/3 |
| Rated insulation voltage | $U_i$ | V AC | 690 |
| Rated operational voltage | $U_e$ | V AC | 690 |
| Safe isolation to EN 61140 | | | |
| between coil and contacts | | V AC | 300 |
| between the contacts | | V AC | 300 |
| Making capacity (cos φ to IEC/EN 60947) | | A | 110 |

| | | | |
|---|---|---|---|
| Breaking capacity | | | |
| 220 V 230 V | | A | 90 |
| 380 V 400 V | | A | 90 |
| 500 V | | A | 64 |
| 660 V 690 V | | A | 42 |
| Short-circuit protection maximum fuse | | | |
| Type "2", 500 V | gL/gG | A | 10 |
| Type "1", 500 V | gL/gG | A | 20 |

## AC

| | | | |
|---|---|---|---|
| AC-1 | | | |
| Rated operational current | | | |
| Conventional free air thermal current, 3 pole, 50 - 60 Hz | | | |
| Open | | | |
| at 40 °C | $I_{th} = I_e$ | A | 22 |
| at 50 °C | $I_{th} = I_e$ | A | 20 |
| at 55 °C | $I_{th} = I_e$ | A | 19 |
| enclosed | $I_{th}$ | A | 16 |
| Notes | | | At maximum permissible ambient air temperature. |
| Conventional free air thermal current, 1 pole | | | |
| Notes | | | At maximum permissible ambient air temperature. |
| open | $I_{th}$ | A | 50 |
| enclosed | $I_{th}$ | A | 40 |
| AC-3 | | | |
| Rated operational current | | | |
| Open, 3-pole: 50 – 60 Hz | | | |
| Notes | | | At maximum permissible ambient temperature (open.)<br>Also tested according to AC-3e. |
| 220 V 230 V | $I_e$ | A | 9 |
| 240 V | $I_e$ | A | 9 |
| 380 V 400 V | $I_e$ | A | 9 |
| 415 V | $I_e$ | A | 9 |
| 440V | $I_e$ | A | 9 |
| 500 V | $I_e$ | A | 6.4 |
| 660 V 690 V | $I_e$ | A | 4.8 |
| Motor rating | P | kWh | |
| 220 V 230 V | P | kW | 2.2 |
| 240V | P | kW | 2.5 |
| 380 V 400 V | P | kW | 4 |
| 415 V | P | kW | 4.3 |
| 440 V | P | kW | 4.6 |
| 500 V | P | kW | 4 |
| 660 V 690 V | P | kW | 4 |
| AC-4 | | | |
| Rated operational current | | | |
| Open, 3-pole: 50 – 60 Hz | | | |
| Notes | | | At maximum permissible ambient air temperature. |
| 220 V 230 V | $I_e$ | A | 6.6 |
| 240 V | $I_e$ | A | 6.6 |
| 380 V 400 V | $I_e$ | A | 6.6 |
| 415 V | $I_e$ | A | 6.6 |
| 440 V | $I_e$ | A | 6.6 |
| 500 V | $I_e$ | A | 5 |
| 660 V 690 V | $I_e$ | A | 3.4 |
| Motor rating | P | kWh | |

| | | | |
|---|---|---|---|
| 220 V 230 V | P | kW | 1.5 |
| 240 V | P | kW | 1.8 |
| 380 V 400 V | P | kW | 3 |
| 415 V | P | kW | 3.1 |
| 440 V | P | kW | 3.3 |
| 500 V | P | kW | 3 |
| 660 V 690 V | P | kW | 3 |

## DC

| | | | |
|---|---|---|---|
| Rated operational current open | | | |
| DC-1 | | | |
| 12 V | $I_e$ | A | 20 |
| 24 V | $I_e$ | A | 20 |
| 60 V | $I_e$ | A | 20 |
| 110 V | $I_e$ | A | 20 |
| 220 V | $I_e$ | A | 20 |

## Magnet systems

| | | | |
|---|---|---|---|
| Voltage tolerance | | | |
| AC operated | | | |
| Dual-frequency coil 50/60 Hz | Pick-up | x $U_c$ | 0.85 - 1.1 |
| Power consumption | | | |
| AC operation | | | |
| Dual-frequency coil 50/60 Hz at 50 Hz | Pick-up | VA | 30 |
| Dual-frequency coil 50/60 Hz at 50 Hz | Pick-up | W | 26 |
| Dual-frequency coil 50/60 Hz at 50 Hz | Sealing | VA | 5.4 |
| Dual-frequency coil 50/60 Hz at 50 Hz | Sealing | W | 1.8 |
| Dual-frequency coil 50/60 Hz at 60 Hz | Pick-up | VA | 29 |
| Dual-frequency coil 50/60 Hz at 60 Hz | Pick-up | W | 24 |
| Dual-frequency coil 50/60 Hz at 60 Hz | Sealing | VA | 3.9 |
| Dual-frequency coil 50/60 Hz at 60 Hz | Sealing | W | 1.8 |
| Duty factor | | % DF | 100 |
| Switching times at 100 % $U_c$ | | | |
| Make contact | | ms | |
| Closing delay | | ms | |
| Closing delay min. | | ms | 14 |
| Closing delay max. | | ms | 21 |
| Opening delay | | ms | |
| Opening delay min. | | ms | 8 |
| Opening delay max. | | ms | 18 |
| Closing delay with top mounting auxiliary contact | | ms | 45 |
| Reversing contactors | | | |
| Changeover time at 110 % $U_c$ | | | |
| Changeover time min. | | ms | 16 |
| Changeover time max. | | ms | 21 |
| Arcing time at 690 V AC | | ms | 12 |

## Current heat losses (3- or 4-pole)

| | | | |
|---|---|---|---|
| at $I_{th}$, 50 °C | | W | 5.9 |
| at $I_e$ to AC-3/400 V | | W | 1.2 |
| Impedance per pole | | mΩ | 9.18 |

## Auxiliary contacts

| | | | |
|---|---|---|---|
| Positive operating contacts to EN 60947-5-1 appendix L, including auxiliary contact module | | | Yes |
| Rated impulse withstand voltage | $U_{imp}$ | V AC | 6000 |
| Overvoltage category/pollution degree | | | III/3 |
| Rated insulation voltage | $U_i$ | V AC | 690 |
| Rated operational voltage | $U_e$ | V AC | 600 |
| Safe isolation to EN 61140 | | | |

| | | | |
|---|---|---|---|
| between coil and auxiliary contacts | | V AC | 300 |
| between the auxiliary contacts | | V AC | 300 |
| Rated operational current | | | |
| AC-15 | | | |
| 220 V 240 V | $I_e$ | A | 6 |
| 380 V 415 V | $I_e$ | A | 3 |
| 500 V | $I_e$ | A | 1.5 |
| DC L/R ≦ 15 ms | | | |
| Contacts in series: | | A | |
| 1 | 24 V | A | 2.5 |
| 2 | 60 V | A | 2.5 |
| 3 | 100 V | A | 1.5 |
| 3 | 220 V | A | 0.5 |
| Conv. thermal current | $I_{th}$ | A | 10 |
| Control circuit reliability | Failure rate | λ | $<10^{-8}$, < one failure at 100 million operations<br>(at $U_e$ = 24 V DC, $U_{min}$ = 17 V, $I_{min}$ = 5.4 mA) |
| Component lifespan at $U_e$ = 240 V | | | |
| AC-15 | Operations | x $10^6$ | 0.2 |
| DC current | | | |
| L/R = 50 ms: 2 contacts in series at $I_e$ = 0.5 A | Operations | x $10^6$ | 0.15 |
| Notes | | | Switch-on and switch-off conditions based on DC-13, time constant as specified |
| Short-circuit rating without welding | | | |
| Maximum overcurrent protective device | | | |
| Short-circuit protection only | | | PKZM0-4 |
| Short-circuit protection maximum fuse | | | |
| 500 V | | A gG/gL | 6 |
| 500 V | | A fast | 10 |
| Current heat loss at a load of $I_{th}$ per contact | | W | 1.1 |

## Rating data for approved types

| | | | |
|---|---|---|---|
| Switching capacity | | | |
| Maximum motor rating | | | |
| Three-phase | | | |
| 200 V<br>208 V | | HP | 2 |
| 230 V<br>240 V | | HP | 3 |
| 460 V<br>480 V | | HP | 5 |
| 575 V<br>600 V | | HP | 5 |
| Single-phase | | | |
| 115 V<br>120 V | | HP | 0.5 |
| 230 V<br>240 V | | HP | 1.5 |
| General use | | A | 15 |
| Auxiliary contacts | | | |
| Pilot Duty | | | |
| AC operated | | | A600 |
| DC operated | | | P300 |
| General Use | | | |
| AC | | V | 600 |
| AC | | A | 10 |
| DC | | V | 250 |
| DC | | A | 0.5 |
| Short Circuit Current Rating | | SCCR | |
| Basic Rating | | | |

| | | | |
|---|---|---|---|
| SCCR | | kA | 5 |
| max. Fuse | | A | 45 |

## Design verification as per IEC/EN 61439

| | | | |
|---|---|---|---|
| Technical data for design verification | | | |
| Rated operational current for specified heat dissipation | $I_n$ | A | 9 |
| Heat dissipation per pole, current-dependent | $P_{vid}$ | W | 0.4 |
| Equipment heat dissipation, current-dependent | $P_{vid}$ | W | 1.2 |
| Static heat dissipation, non-current-dependent | $P_{vs}$ | W | 1.8 |
| Heat dissipation capacity | $P_{diss}$ | W | 0 |
| Operating ambient temperature min. | | °C | -25 |
| Operating ambient temperature max. | | °C | 50 |
| IEC/EN 61439 design verification | | | |
| 10.2 Strength of materials and parts | | | |
| 10.2.2 Corrosion resistance | | | Meets the product standard's requirements. |
| 10.2.3.1 Verification of thermal stability of enclosures | | | Meets the product standard's requirements. |
| 10.2.3.2 Verification of resistance of insulating materials to normal heat | | | Meets the product standard's requirements. |
| 10.2.3.3 Verification of resistance of insulating materials to abnormal heat and fire due to internal electric effects | | | Meets the product standard's requirements. |
| 10.2.4 Resistance to ultra-violet (UV) radiation | | | Meets the product standard's requirements. |
| 10.2.5 Lifting | | | Does not apply, since the entire switchgear needs to be evaluated. |
| 10.2.6 Mechanical impact | | | Does not apply, since the entire switchgear needs to be evaluated. |
| 10.2.7 Inscriptions | | | Meets the product standard's requirements. |
| 10.3 Degree of protection of ASSEMBLIES | | | Does not apply, since the entire switchgear needs to be evaluated. |
| 10.4 Clearances and creepage distances | | | Meets the product standard's requirements. |
| 10.5 Protection against electric shock | | | Does not apply, since the entire switchgear needs to be evaluated. |
| 10.6 Incorporation of switching devices and components | | | Does not apply, since the entire switchgear needs to be evaluated. |
| 10.7 Internal electrical circuits and connections | | | Is the panel builder's responsibility. |
| 10.8 Connections for external conductors | | | Is the panel builder's responsibility. |
| 10.9 Insulation properties | | | |
| 10.9.2 Power-frequency electric strength | | | Is the panel builder's responsibility. |
| 10.9.3 Impulse withstand voltage | | | Is the panel builder's responsibility. |
| 10.9.4 Testing of enclosures made of insulating material | | | Is the panel builder's responsibility. |
| 10.10 Temperature rise | | | The panel builder is responsible for the temperature rise calculation. Eaton will provide heat dissipation data for the devices. |
| 10.11 Short-circuit rating | | | Is the panel builder's responsibility. The specifications for the switchgear must be observed. |
| 10.12 Electromagnetic compatibility | | | Is the panel builder's responsibility. The specifications for the switchgear must be observed. |
| 10.13 Mechanical function | | | The device meets the requirements, provided the information in the instruction leaflet (IL) is observed. |

## Technical data ETIM 7.0

| | | | |
|---|---|---|---|
| Low-voltage industrial components (EG000017) / Power contactor, AC switching (EC000066) | | | |
| Electric engineering, automation, process control engineering / Low-voltage switch technology / Contactor (LV) / Power contactor, AC switching (ecl@ss10.0.1-27-37-10-03 [AAB718015]) | | | |
| Rated control supply voltage Us at AC 50HZ | | V | 230 - 230 |
| Rated control supply voltage Us at AC 60HZ | | V | 230 - 230 |
| Rated control supply voltage Us at DC | | V | 0 - 0 |
| Voltage type for actuating | | | AC |
| Rated operation current Ie at AC-1, 400 V | | A | 22 |
| Rated operation current Ie at AC-3, 400 V | | A | 9 |
| Rated operation power at AC-3, 400 V | | kW | 4 |
| Rated operation current Ie at AC-4, 400 V | | A | 6.6 |
| Rated operation power at AC-4, 400 V | | kW | 3 |
| Rated operation power NEMA | | kW | 3.7 |
| Modular version | | | No |
| Number of auxiliary contacts as normally open contact | | | 1 |

| | |
|---|---|
| Number of auxiliary contacts as normally closed contact | 0 |
| Type of electrical connection of main circuit | Screw connection |
| Number of normally closed contacts as main contact | 0 |
| Number of main contacts as normally open contact | 3 |

## Approvals

| | |
|---|---|
| Product Standards | IEC/EN 60947-4-1; UL 508; CSA-C22.2 No. 14-05; CE marking |
| UL File No. | E29096 |
| UL Category Control No. | NLDX |
| CSA File No. | 012528 |
| CSA Class No. | 3211-04 |
| North America Certification | UL listed, CSA certified |
| Specially designed for North America | No |

## Characteristics

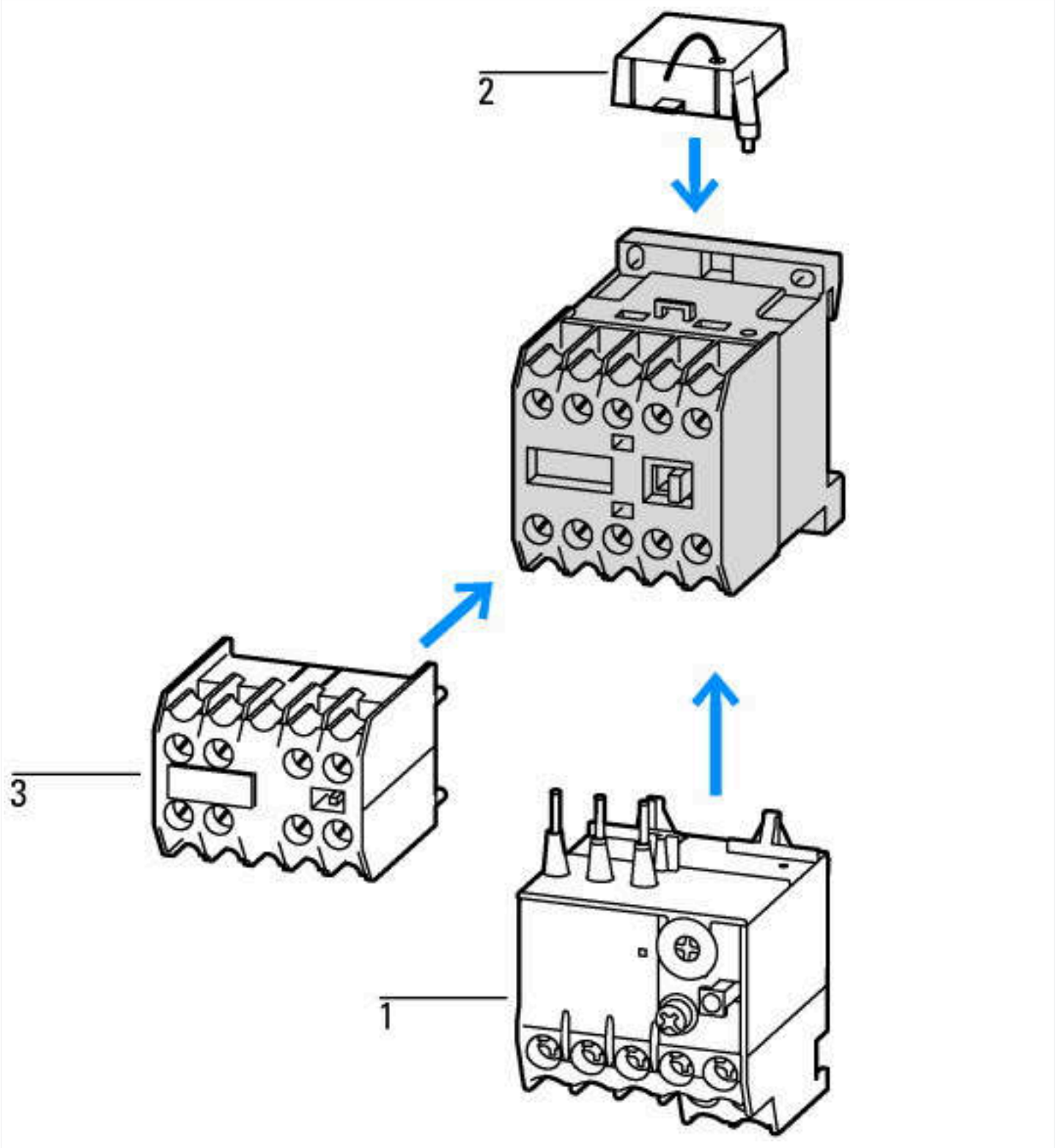


1: Overload relay
2: Suppressor
3: Auxiliary contact modules
Enclosure totally insulated

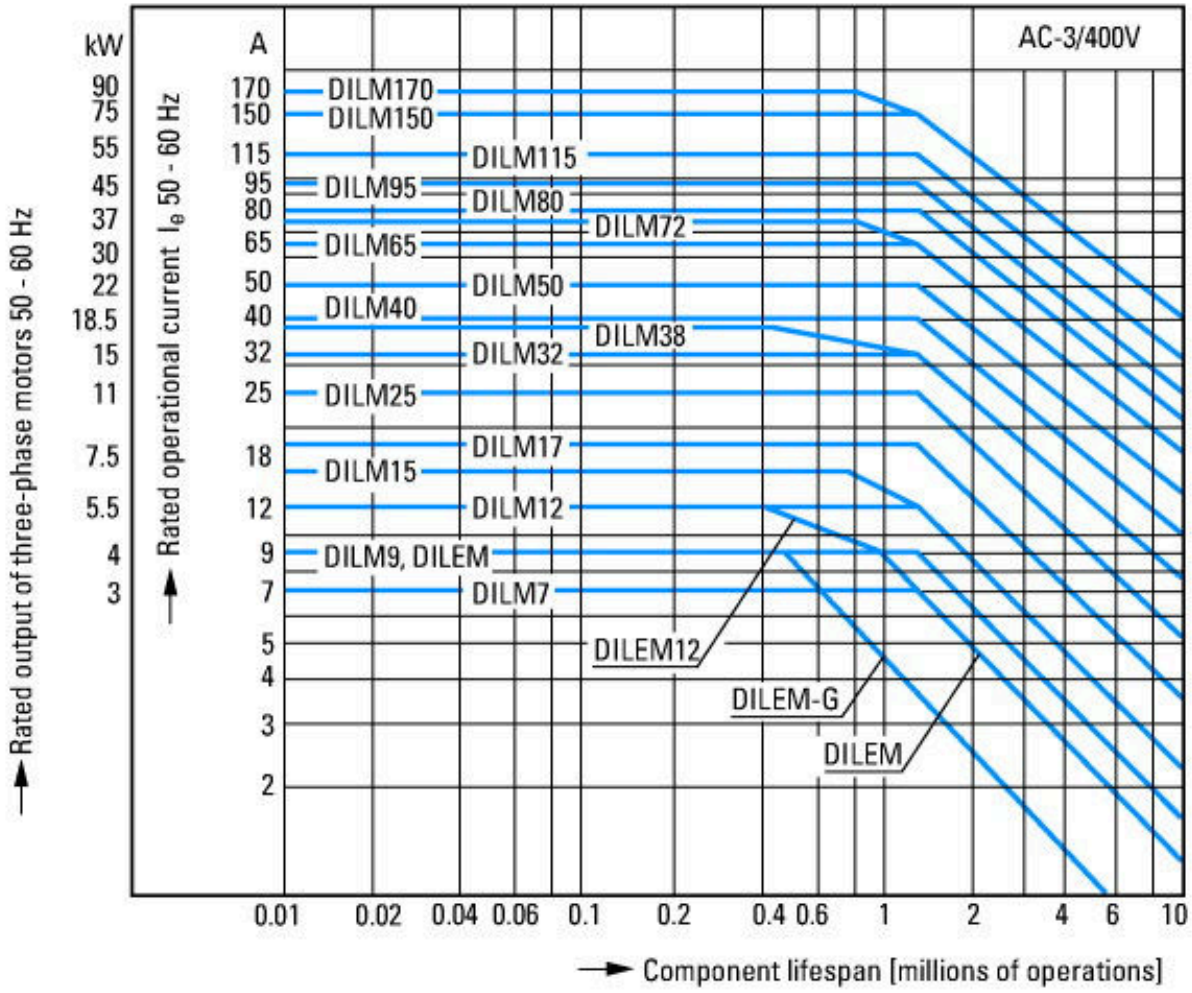


Squirrel-cage motor
Operating characteristics
Starting:from rest
Stopping:after attaining full running speed
Electrical characteristics
Make: up to 6 x rated motor current
Break: up to 1 x rated motor current
Utilization category
100 % AC-3
Typical applications
Compressors
Lifts
Mixers
Pumps
Escalators
Agitators
Fans
Conveyor belts
Centrifuges
Hinged flaps
Bucket-elevators
Air conditioning system
General drives in manufacturing and processing machines

Extreme switching duty
Squirrel-cage motor
Operating characteristics
Inching, plugging, reversing
Electrical characteristics
Make: up to 6 x rated motor current
Break: up to 6 x rated motor current
Utilization category
100 % AC-4
Typical applications
Printing presses
Wire-drawing machines
Centrifuges
Special drives for manufacturing and processing machines

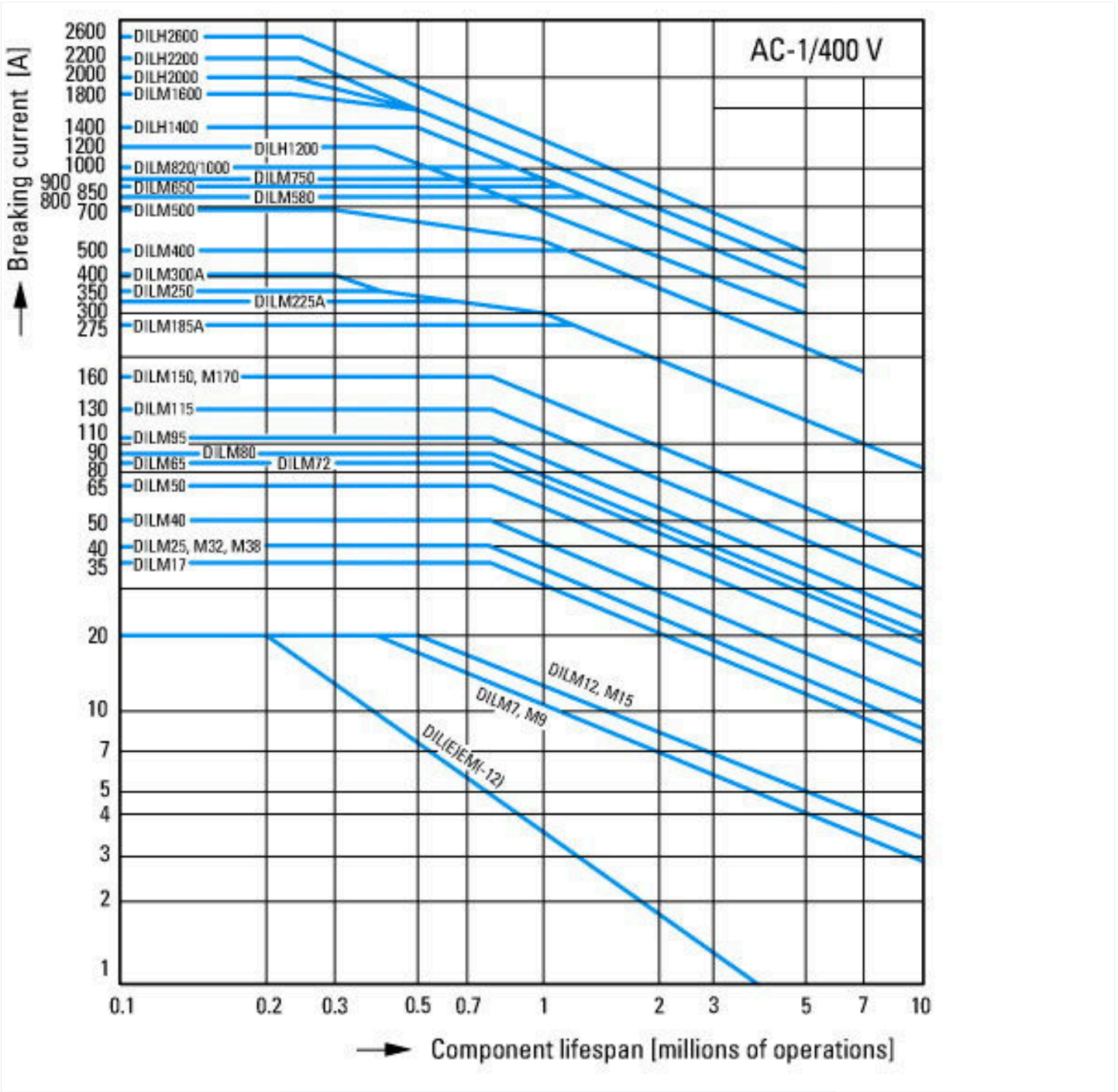


Switching duty for non-motor loads, 3-pole, 4-pole
Operating characteristics
Non-inductive or slightly inductive loads
Electrical characteristics
Make: 1 x rated current
Break: 1 x rated current
Utilization category
100 % AC-1
Typical applications
Electric heat

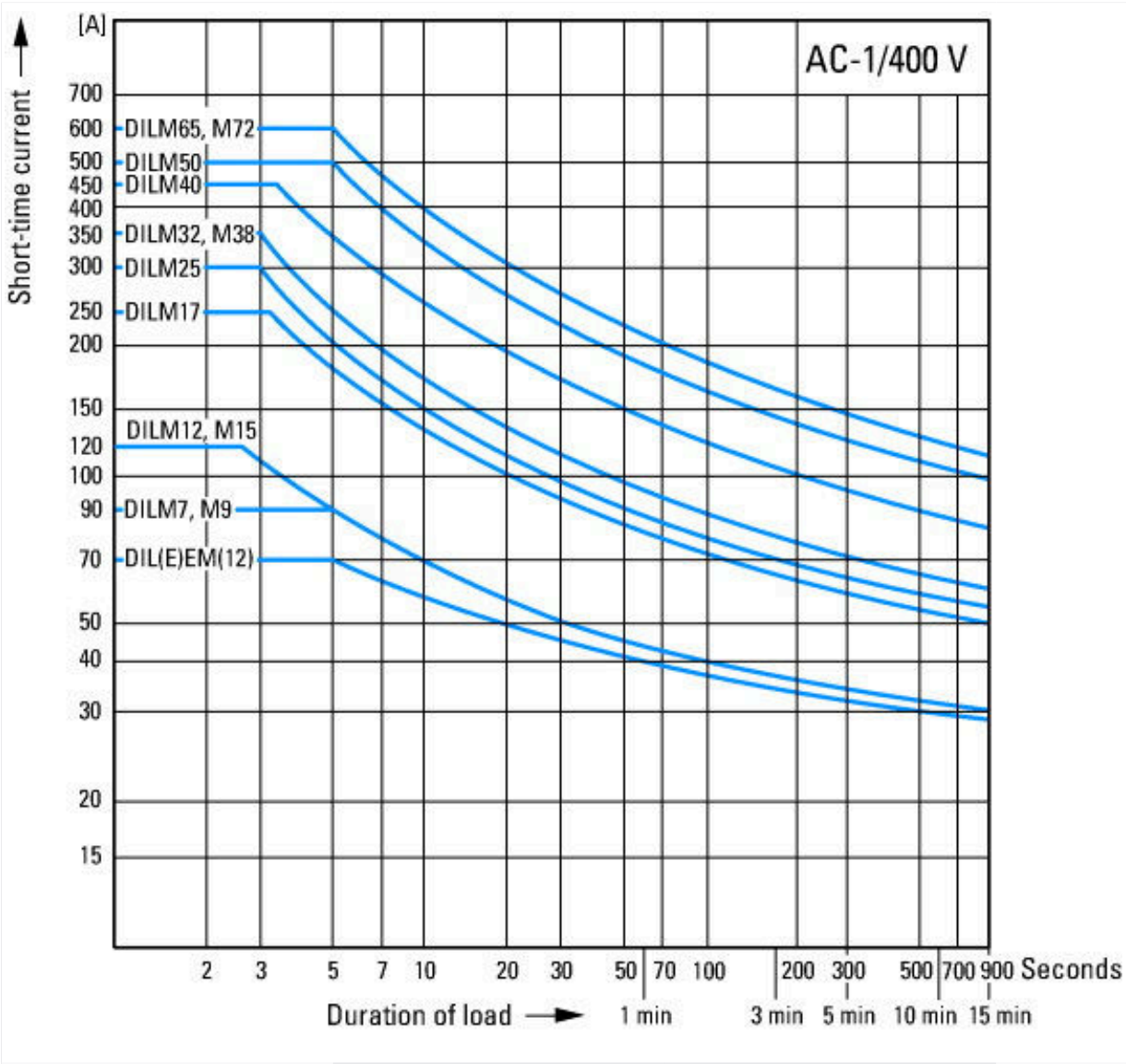


Short-time loading, 3-pole
Time interval between two loading cycles: 15 minutes

## Dimensions

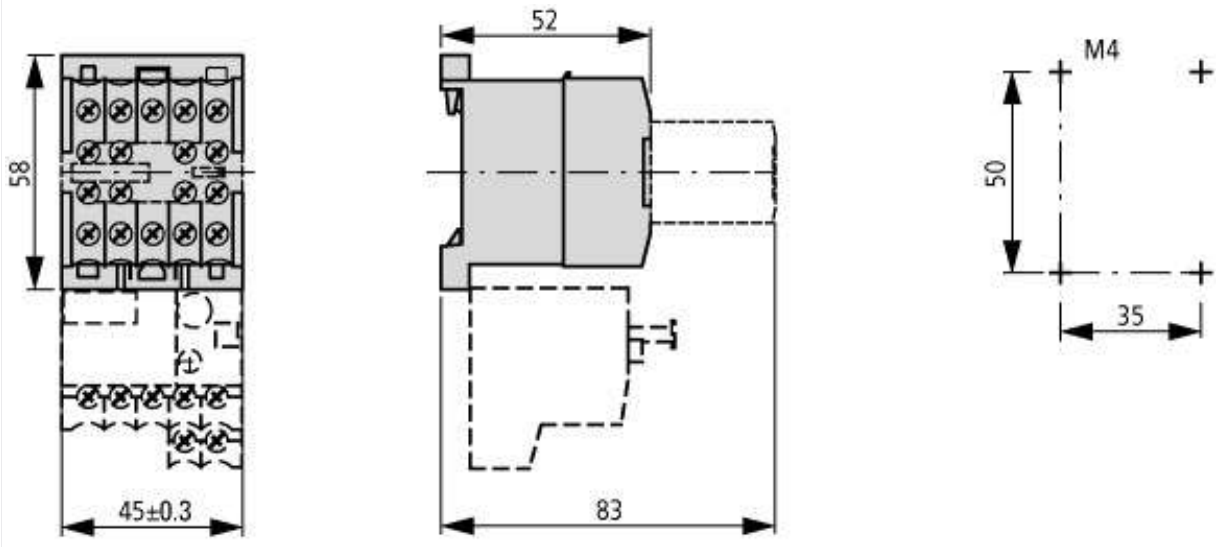

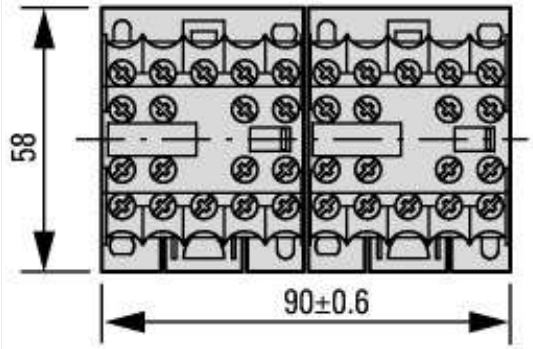


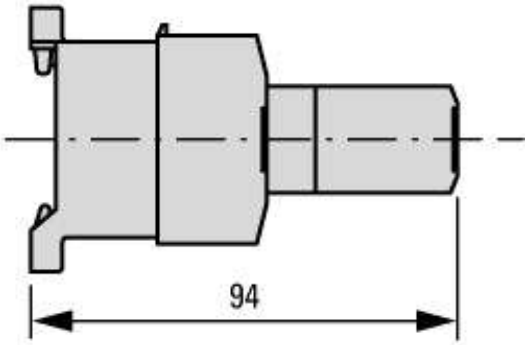


2DILE-… + MVDILE + …DILE
2DILE-…-G + MVDILE + …DILE

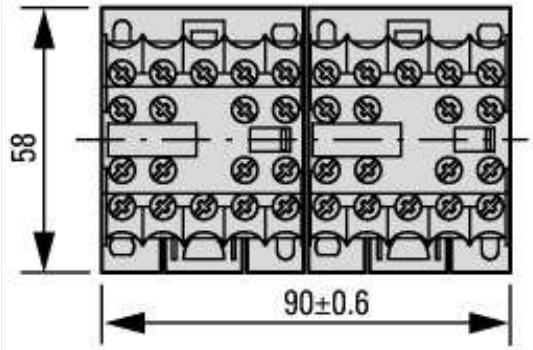


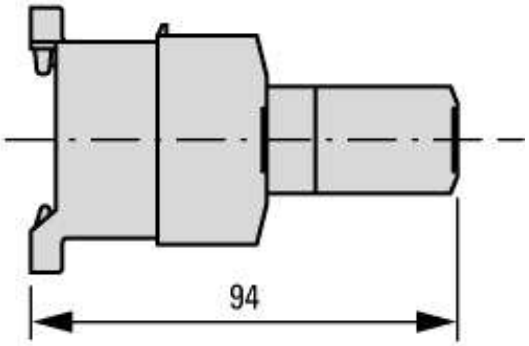


2DILE-… + MVDILE + …DILE
2DILE-…-G + MVDILE + …DILE

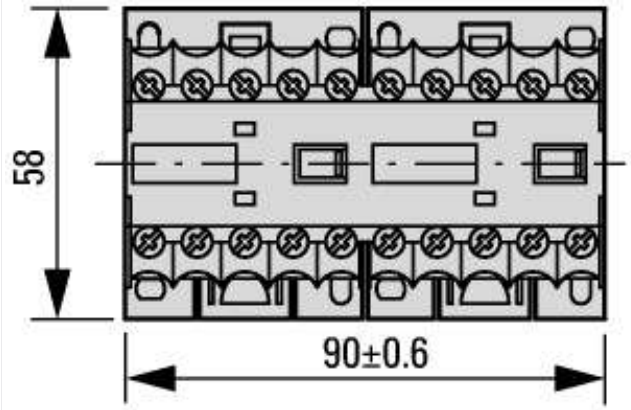


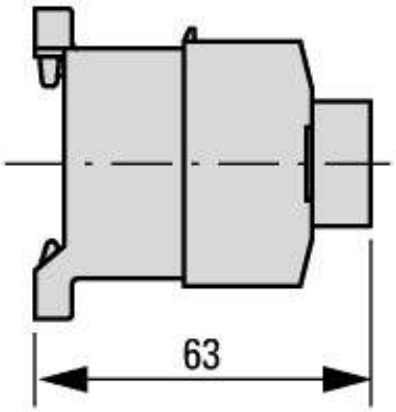


2DILE-… + MVDILE
2DILE-…-G + MVDILE


© 03/2021 by Eaton Industries GmbH