5mm pitch low profile rising clamp terminal blocks

Product overview

- 2 and 3 pole double interlocking mechanism for increased strength
- Professional rising clamp terminals
- Low profile
- Moulded in green UL94-V0 flame retardant PA66
- Cable acceptance - 0.6-1.3mm² (22-16AWG)
- Guided pin alignment
- cULus , VDE approved

CTBP0500



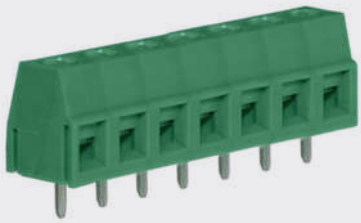

SPECIFICATION	
Rating	UL=8A/300V, VDE=15A/250V
Insulation resistance	500M Ω/500V
Withstand voltage	AC2000V/1min
Contact resistance	20mΩ (max)
Working temperature	-40°C to +105°C
Moulding	UL94-V0 flame retardant PA66
Pin/terminal	Tin plated brass
Rising clamp	Brass, nickel plated
Screw/torque	M2.5 steel, zinc plated 0.4Nm
Recommended PCB hole size	ø1.3mm

PART NO.	POLES	LENGTH
CTBP0500/2	2	10mm
CTBP0500/3	3	15mm
CTBP0500/4	4	20mm
CTBP0500/5	5	25mm
CTBP0500/6	6	30mm
CTBP0500/7	7	35mm
CTBP0500/8	8	40mm
CTBP0500/9	9	45mm
CTBP0500/10	10	50mm
CTBP0500/11	11	55mm
CTBP0500/12	12	60mm

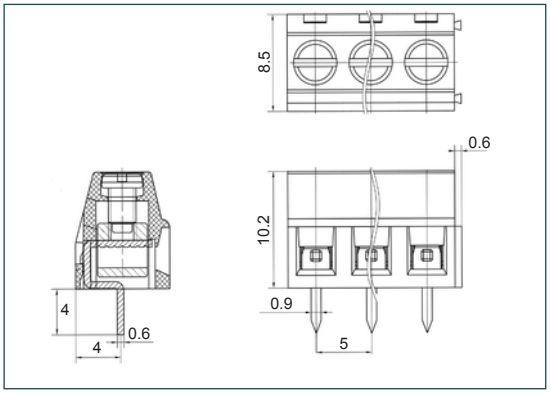

KEY FEATURES

Professional rising clamp | Double interlock mechanism | Low profile

CUSTOMISE ME · PRINTING

+44 (0)1638 716101 | sales@camdenboss.com | www.camdenboss.com

We operate a constant improvement policy, our products are subject to change without notice.

Vers 1