Brand of NTN corporation

Technical data



6306EEC3

Single row deep groove ball bearings

Deep groove ball bearing, radial contact, pressed steel cage, contact seals on both sides

VISUAL (S)

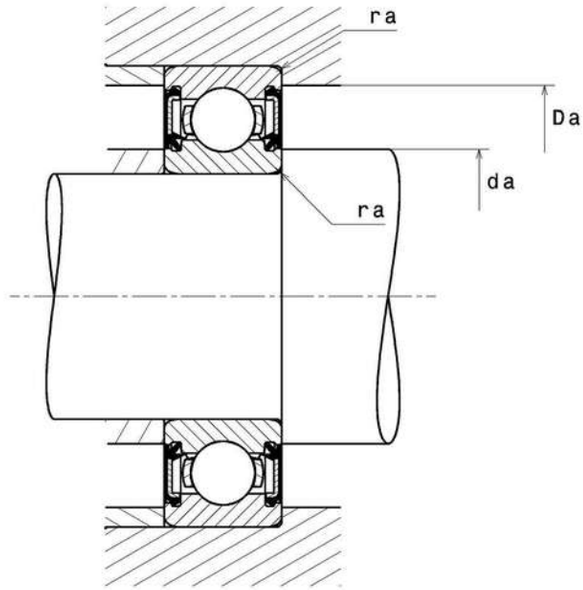

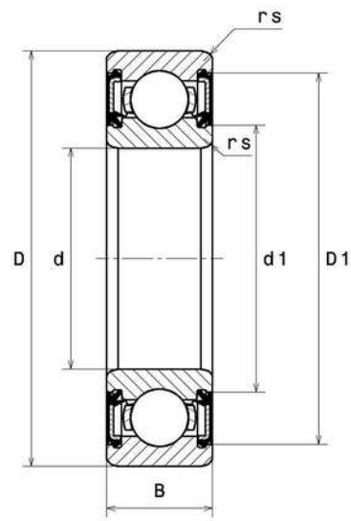

NTN Europe
1 rue des Usines · BP 2017 · 74010 Annecy Cedex · France · Tel. +33 (0)4 50 65 30 00
S.A. au capital de 322 639 919 € · RCS ANNECY B 325 821 072 · Id. Fiscale : FR 48 325 821 072
SIRET 325 821 072 00015 · Code APE 2815 Z · Code NACE 28.15

6306EEC3
Single row deep groove ball bearings

PRODUCT DEFINITION	
Brand	SNR
d - Internal diameter	30 mm
D - External diameter	72 mm
B - Bearing/Inner ring width	19 mm
d1 - External diameter inner ring	42,6 mm
D1 - Inner diameter outer ring	61,9 mm
rs - Min fillet radius	1,1 mm
Radial clearance class	C3
Mass	0,345 kg

PRODUCT PERFORMANCE	
C - Dynamic load	28,1 kN
C0 - Static load	15 kN
Cu - Fatigue limit load	0,68 kN
f0 - Coefficient	13.3
Nlim - Mechanical Limit Speed	6700 tr/min
Tmin - Min operating temperature	-30 °C
Tmax - Max operating temperature	120 °C

BEARING FREQUENCIES	
BPFO - Characteristic outer ring frequency (60 rpm)	3.084 Hz
BPFI - Characteristic inner ring frequency (60 rpm)	4.916 Hz
FTF - Characteristic cage frequency (60 rpm)	0.386 Hz
BSF - Characteristic rolling element frequency (60 rpm)	4.139 Hz

6306EEC3
Single row deep groove ball bearings

ABUTMENT	
da min - Min shoulder diameter IR	36,5 mm
Da max - Max shoulder diameter OR	65,5 mm
ra max - Max shaft & housing fillet radius	1 mm

INDUSTRY CALCUL FACTORS

Equivalent dynamic radial load

P = X.Fr + Y.Fa

$\frac{f_0 F_a}{C_0}$	e	Fa / Fr ≤ e		Fa / Fr > e	
		X	Y	X	Y
0.172	0.19	1	0	0.56	2.3
0.345	0.22				1.99
0.689	0.26				1.71
1.03	0.28				1.55
1.38	0.3				1.45
2.07	0.34				1.31
3.45	0.38				1.15
5.17	0.42				1.04
6.89	0.44				1

Equivalent static radial load

Po = Xo.Fr + Yo.Fa

X_0	Y_0
0.6	0.5

For single or DT bearing arrangement :

If Po <Fr, then use Po = Fr