IPRK 18 Retro-reflective photoelectric sensors with polarization filter

en 07-2014/05 50110548-01



0 … 3m

- Polarized retro-reflective photoelectric sensor for reliable detection of transparent media (e.g. clear glass, PET, foil). The sensor uses visible red light and comes with integrated AS-i slave.
- Detection range changeover via AS-i (e. g. from clear glass to colored glass or non-transparent media) without further user intervention
- Gap detection ≥ 5mm (see table)
- autoControl warning function for increased availability and for checking the correct basic setting
- Extended switching pulse for reliable transmission via AS-interface

IEC 60947... IEC 60947... IP 69K IP 67

Accessories:

(available separately)

- Mounting system (BT 95)
- M12 connectors (KD …)
- M8 connectors (KD …)
- Reflectors
- Reflective tapes

Dimensioned drawing

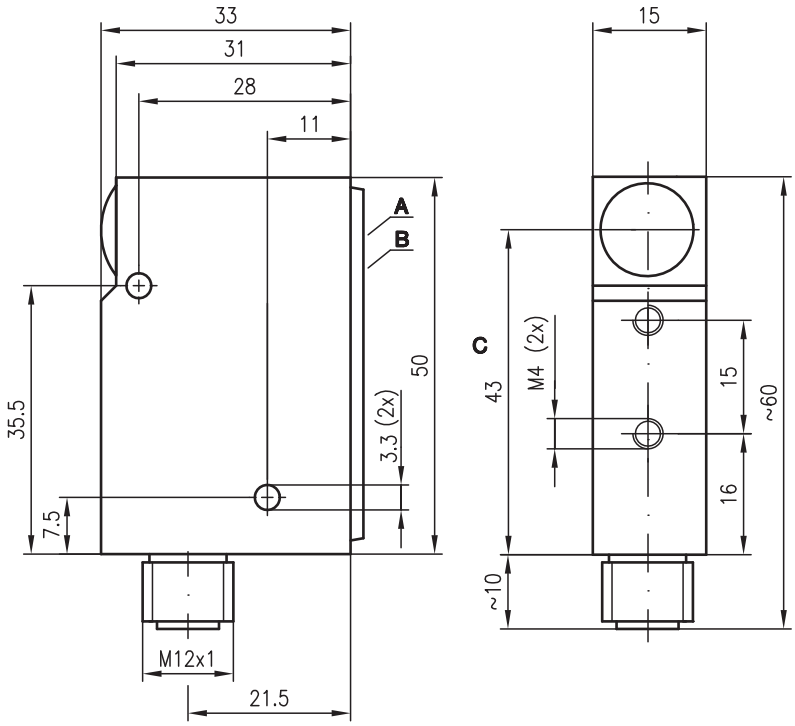

Minimal switching pulse for IPRK 18/A.1 L.4

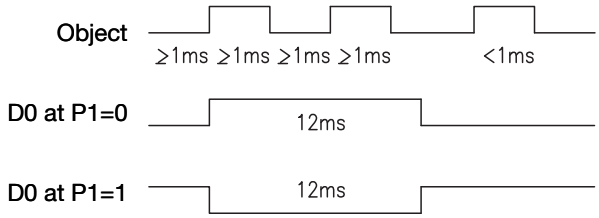

A Indicator diode
B Sensitivity adjustment
C Optical axis

Electrical connection

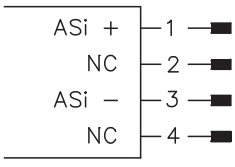

We reserve the right to make changes • DS_IPRK18AL4_en_50110548_01.fm

Specifications

Optical data

Typ. operating range limit (TK(S) 100x100) [1]	0 … 3m
Operating range [2]	see tables
Recommended reflector	MTKS 50x50.1
Light source	LED (modulated light)
Wavelength	660nm (visible red light, polarized)

Timing

Switching frequency (sensor)	according to AS-i specifications: 1000Hz internally
Response time (sensor)	according to AS-i specifications: 0.5ms internally
Delay before start-up	≤ 300ms

Electrical data

Operating voltage U_B [3]	26.5V … 31.6V (according to AS-i specification)
Open-circuit current	≤ 35mA
Sensitivity	**basic setting**: clear glass via 12-turn potentiometer **changeover**: clear/colored glass/non-transparent via AS-i (D2, D3 data bits)

Indicators

Yellow LED	**continuous light, switching output** **flashing slowly, sensor identification** - activation via AS-i (D2, D3 data bits)
Green LED	**flashing slowly, operating point 1, clear glass** - manual adjustment (see remarks) - activation via AS-i (D2, D3 data bits) **flashing fast, operating point 2, colored glass** - activation via AS-i (D2, D3 data bits) **continuous light, op. point 3, opaque media** - activation via AS-i (D2, D3 data bits)

Mechanical data

Housing	diecast zinc
Optics cover	glass
Weight	150g
Connection type	M12 connector, 4-pin, stainless steel

Environmental data

Ambient temp. (operation/storage)	-20°C … +60°C/-30°C … +70°C
Protective circuit [4]	2, 3
VDE safety class	III
Protection class	IP 67, IP 69K [5]
Light source	free group (in accordance with EN 62471)
Standards applied	IEC 60947-5-2
Certifications	UL 508, C22.2 No.14-13 [3] [6]

AS-i data

I/O code	3
ID code	F
Address	programmed by the user in the range of 1 to 31 (default=0)
Cycle time acc. to AS-i specification	max. 5ms
AS-i standard according to profile	S-3.F

1) Typ. operating range limit: max. attainable range without performance reserve
2) Operating range: recommended range with performance reserve
3) For UL applications: for use in class 2 circuits according to NEC only
4) 2=polarity reversal protection, 3=short circuit protection for all outputs
5) IP 69K test acc. to DIN 40050 part 9 simulated, high pressure cleaning conditions without the use of additives, acids and bases are not part of the test
6) These proximity switches shall be used with UL Listed Cable assemblies rated 30V, 0.5A min, in the field installation, or equivalent (categories: CYJV/CYJV7 or PVVA/PVVA7)

Operate in accordance with intended use!

- This product is not a safety sensor and is not intended as personnel protection.
- The product may only be put into operation by competent persons.
- Only use the product in accordance with the intended use.

AS-i data

Assignment: data bits

Programming (host level)

D_0	**Switching output**	Ø no reflection 1 reflection	System input
D_1	**Warning output autoControl**	Ø active 1 not active	System input
D_2	**Adjusting the performance reserve**	see table	System output
D_3			System output

Assignment: parameter bits

Programming (host level)

P_0	**NC**	Ø	System parameter
P_1	**Light/dark switching**	Ø dark switching *1 light switching	System parameter
P_2	**NC**	Ø	System parameter
P_3	**NC**	Ø	System parameter

* default = 1

Tables

Reflectors			Operating range
1	TK(S)	100x100	0 … 2.4m
2	MTKS	50x50.1	0 … 2.0m
3	TK(S)	30x50	0 … 0.8m
4	TK(S)	20x40	0 … 0.8m
5	Tape 6	50x50	0 … 1.8m

1	0				2.4	3.0
2	0				2.0	2.5
3	0		0.8	1.0		
4	0		0.8	1.0		
5	0				1.8	2.0

Operating range [m] *)
Typ. operating range limit [m] *)

*) For sensitivity set to operating point 3

D_2	D_3	Performance reserve
#0	#0	Sensor identification
1	0	Parameter for clear glass
0	1	Parameter for colored glass
1	1	Parameter for opaque objects

Basic setting (see remarks)

D_2	D_3	autoControl (D_1=0)
0	0	Incorrect basic setting
1	0	System misaligned
0	1	System misaligned
1	1	System misaligned

Diagrams

Typ. object gap
(MTKS 50x50.1 at 400mm)

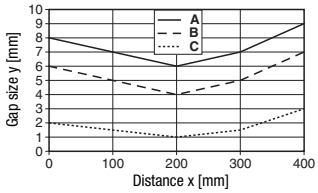

A Operating pt. 1
B Operating pt. 2
C Operating pt. 3

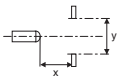

Remarks

Objects	Configuration (indicator green LED)
Clear glass, PET, foil	Operating pt. 1 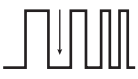

- The potentiometer may only be used in basic setting (D2=0, D3=0).
- In autoControl (D1=0) clean the system and align it optimally with reflector, set a new basic setting, if required.
- Reflectors with small triple structures are required for ranges ≤ 200mm.
- The light spot may not exceed the reflector.
- Preferably use MTK(S) or tape 6.
- For foil 6 the sensor's side edge must be aligned parallel to the side edge of the reflective tape.

IPRK 18 Retro-reflective photoelectric sensors with polarization filter

Order guide

	Designation	Part no.
	IPRK 18/A L.4	50030077
With 12ms pulse stretching	IPRK 18/A.1 L.4	50034119