KI5090

Capacitive sensor

KIA3150NFPKG/2T/US

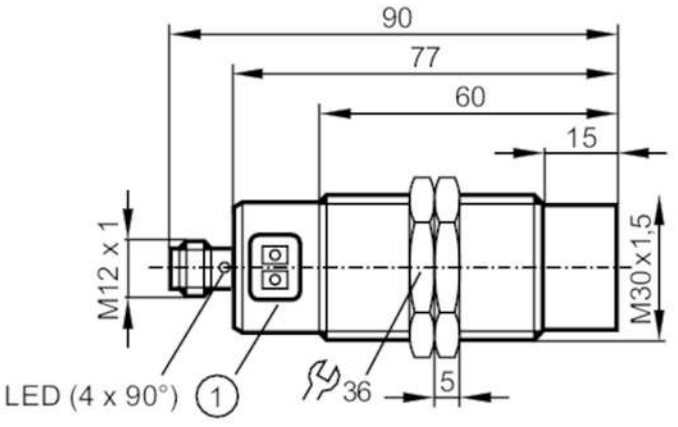

1 programming buttons

Product characteristics		
Electrical design		PNP
Output function		normally open / normally closed; (selectable)
Sensing range	[mm]	15
Communication interface		IO-Link
Housing		threaded type
Dimensions	[mm]	M30 x 1.5 / L = 90
Electrical data		
Operating voltage	[V]	10...30 DC; (10...36 DC (60 °C))
Current consumption	[mA]	< 18
Protection class		III
Reverse polarity protection		yes
Measuring principle		capacitive
Outputs		
Electrical design		PNP
Output function		normally open / normally closed; (selectable)
Max. voltage drop switching output DC	[V]	2.5
Permanent current rating of switching output DC	[mA]	100
Switching frequency DC	[Hz]	10
Short-circuit proof		yes
Overload protection		yes
Detection zone		
Sensing range	[mm]	15
Real sensing range Sr	[mm]	15 ± 10 %
Accuracy / deviations		
Hysteresis	[% of Sr]	10...25

KI5090

Capacitive sensor

KIA3150NFPKG/2T/US

Switch point drift	[% of Sr]	-20...20	
Interfaces			
Communication interface		IO-Link	
Transmission type		COM1 (4,8 kBaud)	
IO-Link revision		1.1	
SDCI standard		IEC 61131-9 CDV	
Profiles		Smart Sensor	
SIO mode		yes	
Min. process cycle time	[ms]	101	
Supported DeviceIDs		Type of operation	DeviceID
		Default	388
Operating conditions			
Ambient temperature	[°C]	-25...80	
Protection		IP 65; IP 67	
Tests / approvals			
EMC		EN 61000-4-2 ESD	8 kV AD
		EN 61000-4-3 HF radiated	10 V/m
		EN 61000-4-4 Burst	2 kV
		EN 61000-4-6 HF conducted	3 V
		EN 55011	class B
Vibration resistance		EN 60068-2-6 Fc	(10...55 Hz) / 1 mm amplitude, oscillation period 5 min., 30 min. per axis at resonance or 55 Hz
Shock resistance		EN 60068-2-27 Ea	30 g 6 shocks / 11 ms half-sine (x, y, z)
MTTF	[years]	719	
Mechanical data			
Weight	[g]	119.1	
Housing		threaded type	
Mounting		non-flush mountable	
Dimensions	[mm]	M30 x 1.5 / L = 90	
Thread designation		M30 x 1.5	
Materials		housing: stainless steel (1.4404 / 316L); pushbuttons: TPE-U; cover: PBT; LED window: PEI	
Displays / operating elements			
Display		switching status	4 x 90° LED, yellow
Teach function		yes	
Electronic lock		yes	
Accessories			
Items supplied		lock nuts: 2	
Remarks			
Pack quantity		1 pcs.	

KI5090

Capacitive sensor

KIA3150NFPKG/2T/US

Electrical connection - plug

Connector: 1 x M12; coding: A

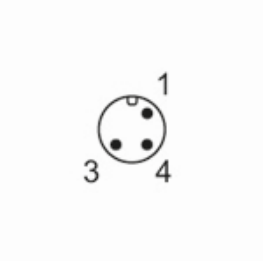

Connection

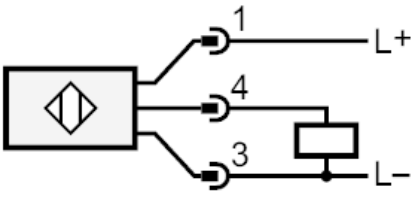

4: OUT / IO-Link