JUMO GmbH & Co. KG
Delivery address: Mackenrodtstraße 14
36039 Fulda, Germany
Postal address: 36035 Fulda, Germany
Phone: +49 661 6003-0
Fax: +49 661 6003-607
Email: mail@jumo.net
Internet: www.jumo.net

JUMO UK LTD
JUMO House
Temple Bank, Riverway
Harlow, Essex, CM20 2DY, UK
Phone: +44 1279 63 55 33
Fax: +44 1279 62 50 29
Email: sales@jumo.co.uk
Internet: www.jumo.co.uk

JUMO Process Control, Inc.
6724 Joy Road
East Syracuse, NY 13057, USA
Phone: +1 315 437 5866
Fax: +1 315 437 5860
Email: info.us@jumo.net
Internet: www.jumousa.com

JUMO exTHERM-AT

Explosion-proof surface-mounted thermostat for zones 1, 2, 21, and 22

Special features

- Single thermostat and double thermostat with capillary or rigid thermowell
- Switching capacity up to 25 A
- Admissible ambient temperatures -55 to +70 °C (standard -40 to +70 °C)
- Thermowell for use in zone 0 available as an accessory
- Quick and safer electrical connection through Push-In® terminal technology
- Stable switching points through standard ambient temperature compensation



JUMO exTHERM-AT double thermostat



JUMO exTHERM-AT single thermostat

Brief description

The explosion-proof surface-mounted thermostats of the JUMO exTHERM series are built to monitor and control temperatures in potentially explosive areas. The use in environments with gas and steam is permitted (zones 1 and 2); use in environments with conductive dust (zones 21 and 22) is also permitted.

The JUMO exTHERM-AT is available as temperature monitor TW, safety temperature monitor (STW), and safety temperature limiter (STB). The thermostats work according to the liquid expansion or gas expansion principle. The electrical switching element is a pressure-resistant encapsulated thermostat with a snap-action switch. Stable switching points when ambient temperatures fluctuate are made possible by the standard ambient temperature compensation.

The thermostats of the JUMO exTHERM-AT series are RoHS conform and cadmium free.

Version according to DIN EN 14597:

TW	Temperature monitor
STW	Safety temperature monitor
STB	Safety temperature limiter

ATEX mark

	**II 2G Ex db eb IIC T4/T5/T6 Gb** For explosive gas atmosphere
	**II 2D Ex tb IIIC T85 °C/T100 °C/T130 °C Db** For explosive dust atmosphere

IECEx mark

	**Ex db eb IIC T4/T5/T6 Gb** For explosive gas atmosphere
	**Ex tb IIIC T85 °C/T100 °C/T130 °C Db** For explosive dust atmosphere

Test certificate ATEX

EPS 11 ATEX 1 354

Test certificate IECEx

IECEx EPS 13.0046

Test certificate SIL

EPS 11 ATEX 1 354 (SIL 2)

JUMO GmbH & Co. KG
Delivery address: Mackenrodtstraße 14
36039 Fulda, Germany
Postal address: 36035 Fulda, Germany
Phone: +49 661 6003-0
Fax: +49 661 6003-607
Email: mail@jumo.net
Internet: www.jumo.net

JUMO UK LTD
JUMO House
Temple Bank, Riverway
Harlow, Essex, CM20 2DY, UK
Phone: +44 1279 63 55 33
Fax: +44 1279 62 50 29
Email: sales@jumo.co.uk
Internet: www.jumo.co.uk

JUMO Process Control, Inc.
6724 Joy Road
East Syracuse, NY 13057, USA
Phone: +1 315 437 5866
Fax: +1 315 437 5860
Email: info.us@jumo.net
Internet: www.jumousa.com

Approval marks and certificates

	Designation	ATEX
	Testing agency	Bureau Veritas
	Certificate no.	EPS 11 ATEX 1 354
	Inspection basis	EN IEC 60079-0, EN 60079-1, EN IEC 60079-7, EN 60079-26, EN 60079-31, EN 50495, EN ISO 80079-37
	Valid for	Type 605055/...
	Designation	UKEX
	Testing agency	Bureau Veritas
	Certificate no.	EPS 22 UKEX 1 129
	Inspection basis	EN IEC 60079-0, EN 60079-1, EN IEC 60079-7, EN 60079-26, EN 60079-31, EN 50495, EN ISO 80079-37
	Valid for	Type 605055/...
	Designation	IECEx
	Testing agency	Bureau Veritas
	Certificate no.	IECEx EPS 13.0046
	Inspection basis	IEC 60079-0, IEC 60079-1, IEC 60079-31, IEC 60079-7
	Valid for	Type 605055/... with extra code 372
	Designation	PESO
	Testing agency	Bureau Veritas
	Certificate no.	P518656/1
	Inspection basis	IEC 60079-0, IEC 60079-1, IEC 60079-31, IEC 60079-7
	Valid for	Type 605055/... with extra code 083
	Designation	CCC
	Testing agency	CNEX
	Certificate no.	2021312304001188
	Inspection basis	GB3836.1, GB3836.2, GB3836.3, GB12476.1, GB12476.5
	Valid for	Type 605055/... with extra code 084
	Designation	KC Korea – KOSHA
	Testing agency	Kosha Korea
	Certificate no.	22-AV4BO-0372X
	Inspection basis	IEC 60079-0, IEC 60079-1, IEC 60079-31, IEC 60079-7
	Valid for	Type 605055/...
	Designation	SIL
	Testing agency	Bureau Veritas
	Certificate no.	EPS 11 ATEX 1 354
	Inspection basis	DIN EN 50495
	Valid for	Type 605055/... with extra code 073
	Designation	UA TR
	Testing agency	SERTIS-CENTER
	Certificate no.	СЦ 21.0635
	Inspection basis	DSTU EN 60079-0, DSTU EN 60079-1, DSTU EN 60079-7, DSTU EN 60079-31
	Valid for	Type 605055/...

Certificates for approved device versions are available for download on the manufacturer's website.

JUMO GmbH & Co. KG
Delivery address: Mackenrodtstraße 14
36039 Fulda, Germany
Postal address: 36035 Fulda, Germany
Phone: +49 661 6003-0
Fax: +49 661 6003-607
Email: mail@jumo.net
Internet: www.jumo.net

JUMO UK LTD
JUMO House
Temple Bank, Riverway
Harlow, Essex, CM20 2DY, UK
Phone: +44 1279 63 55 33
Fax: +44 1279 62 50 29
Email: sales@jumo.co.uk
Internet: www.jumo.co.uk

JUMO Process Control, Inc.
6724 Joy Road
East Syracuse, NY 13057, USA
Phone: +1 315 437 5866
Fax: +1 315 437 5860
Email: info.us@jumo.net
Internet: www.jumousa.com

Technical data

Switching functions

Temperature monitor TW and safety temperature monitor STW	**Restart lock for the safety temperature limiter STB**	**Self-monitoring for the safety temperature monitor STW and safety temperature limiter STB**
If the temperature on the temperature probe exceeds the setpoint value, the microswitch is activated by the transmission mechanics and the electrical circuit is opened or closed. If the temperature falls below the selected setpoint value (by the amount of the switching differential), the microswitch is reset to its initial position	If the temperature on the temperature probe exceeds the set limit value, the electrical circuit is opened and the microswitch is mechanically locked. The microswitch can be manually unlocked once the dangerous temperature of the setpoint value drops by approx. 20 % of the scale range.	If the measuring system is destroyed (i.e. if the expansion fluid escapes) the pressure in the membrane of the STB and STW drops and permanently opens the electrical circuit. Unlocking is then no longer possible. The electrical circuit opens when cooling the probe of STW (STB) and STB down to the negative temperature range, but it then closes again if the temperature rises. The STB must be unlocked manually if the minimum probe temperature is exceeded. The STW unlocks itself automatically.

Temperature compensation

When the ambient temperature on the switching head and the capillary deviates – from the calibration ambient temperature of 22 °C – a switching point offset occurs. This switching point offset is reduced to a minimum due to the temperature compensation.

Housing

Material	Polyester case, glass fiber reinforced, black (option: stainless steel) Due to the conductive soot-doped surface with a low surface resistance, static charging is not possible.
Protection type	EN 60529 - IP65 (polyester case), pollution level 2, IP 66 with extra code 861
Setpoint value adjustment	With screwdriver (once the case lid has been removed)
Switching head fastening	Using four screws (once the case lid has been removed)
Weight	Approx. 1200 g single thermostat/approx. 2000 g double thermostat
Cable inlet	Ex cable gland M20 × 1.5, sealing area 6 to 13 mm and Ex cable gland M25 × 1.5, sealing area 7 to 17 mm

Process connection

JUMO exTHERM-AT with capillary	Plain cylindrical probe (standard), rigid thermowell, spiral probe for room thermostat version

Accessories

JUMO exTHERM-AT	Multi-section standard thermowells made out of CrNi for use in zones 1, 2, 21, 22 (see data sheet 606710) Multi-section thermowells made out of CrNi for use in zone separation 0/1, 20/21 (see new data sheet 605057)

JUMO GmbH & Co. KG
Delivery address: Mackenrodtstraße 14
36039 Fulda, Germany
Postal address: 36035 Fulda, Germany
Phone: +49 661 6003-0
Fax: +49 661 6003-607
Email: mail@jumo.net
Internet: www.jumo.net

JUMO UK LTD
JUMO House
Temple Bank, Riverway
Harlow, Essex, CM20 2DY, UK
Phone: +44 1279 63 55 33
Fax: +44 1279 62 50 29
Email: sales@jumo.co.uk
Internet: www.jumo.co.uk

JUMO Process Control, Inc.
6724 Joy Road
East Syracuse, NY 13057, USA
Phone: +1 315 437 5866
Fax: +1 315 437 5860
Email: info.us@jumo.net
Internet: www.jumousa.com

Operating data

Medium ambient temperature influence	When the ambient temperature on the switching head and/or the capillary deviates from the calibration ambient temperature of 22 °C, a switching point offset occurs. Higher ambient temperature = lower switching point Lower ambient temperature = higher switching point

Admissible storage temperature/ admissible ambient temperature when in use	-40 °C, optionally -60 to +70 °C (referring to T4, at 25 A max. 55 °C)
Max. probe temperature	+15 % of the limit value/max. adjustment value or 25 K
Rated position (NL)	According to DIN 16257, NL 0 to NL 90

Electrical data

Max. switching capacity	Selectable on the N/C contact (contact deck 1-2):	
	AC 400 V +10 %, 16 A	
	AC 230 V +10 %, 16 (2.5) A, cos φ = 1 (0.6)[a]	
	AC 230 V +10 %, 25 (4) A, cos φ = 1 (0.6)	
	DC 230 V +10 %, 0.25 A	
	Selectable on the N/O contact (contact deck 1-4):	
	TW, STW	STB
	AC 400 V +10 %, 6.3 A	AC 400 V +10 %, 2 A
	AC 230 V +10 %, 6.3 (2.5) A, cos φ = 1 (0.6)[a]	AC 230 V +10 %, 2 (0.4) A, cos φ = 1 (0.6)[a]
	AC 230 V +10 %, 2 (0.4) A, cos φ = 1 (0.6)	AC 230 V +10 %, 2 (0.4) A, cos φ = 1 (0.6)
	DC 230 V +10 %, 0.25 A	AC 230 V +10 %, 0.25 A
	Snap-action switch, gold-plated AC/DC = 24 V, 0.1 A	
Min. switching capacity	To ensure the greatest possible switching reliability we recommend a minimum load of: AC/DC = 24 V, 100 mA for silver contacts AC/DC = 10 V, 5 mA for gold-plated contacts	

[a] standard

Capillary and temperature probe

Type	**Capillary Ø 1.5 mm**	**Temperature probe**
JUMO exTHERM-AT	Stainless steel (CrNi) 1.4571	Stainless steel (CrNi) 1.4571, welded
Capillary length	Max. 5000 mm	
Capillary bending radius	≥ 5 mm	

JUMO GmbH & Co. KG
Delivery address: Mackenrodtstraße 14
36039 Fulda, Germany
Postal address: 36035 Fulda, Germany
Phone: +49 661 6003-0
Fax: +49 661 6003-607
Email: mail@jumo.net
Internet: www.jumo.net

JUMO UK LTD
JUMO House
Temple Bank, Riverway
Harlow, Essex, CM20 2DY, UK
Phone: +44 1279 63 55 33
Fax: +44 1279 62 50 29
Email: sales@jumo.co.uk
Internet: www.jumo.co.uk

JUMO Process Control, Inc.
6724 Joy Road
East Syracuse, NY 13057, USA
Phone: +1 315 437 5866
Fax: +1 315 437 5860
Email: info.us@jumo.net
Internet: www.jumousa.com

Control ranges and probe table

Control range	Max. capillary length	Probe length „L“				
		For „d“ = 4 mm		For „d“ = 6 mm		
		TW	STW, STB	TW	STW	STB
		Hysteresis				
in °C	in mm	Approx. 2.5 %	Approx. 7 %	Approx. 2.5 %	Approx. 7 %	-
-20 to +50	5000	-	-	138	81	81
0 to 120	5000	203	115	90	65	65
0 to 190	5000	136	79	71	52	-
60 to 300	3000	-	-	-	155	-
20 to 500	5000	-	-	278	-	-
140 to 500	5000	-	-	-	133	133
70 to 190	5000	-	99	-	59	59
20 to 400	3000	-	-	155	-	-
150 to 300	3000	-	-	-	-	155

Switching point tolerance in the middle section of the scale

Control range in °C	TW in K	STW upward adjustment in K	STW downward adjustment in K	STB in K
-20 to +40 (spiral probe)	+2/-2	-	-	-
-20 to +50	+3/-3	+0/-5	+5/-0	-
0 to 120	+5/-5	+0/-10	+10/-0	+0/-10
0 to 190	+8/-8	+0/-16	+16/-0	-
70 to 190	-	+0/-16	+16/-0	+0/-16
130 to 190	-	-	-	+0/-16
20 to 400	+18/-18	-	-	-
60 to 300	-	+0/-36	+36/-0	-
150 to 300	-	-	-	+0/-36
140 to 500	-	+0/-44	+44/-0	+0/-44
20 to 500	+22/-22	-	-	-
Temperature monitors (TW) and safety temperature monitors (STW) are adjusted ascendingly in the middle section of the scale as standard procedure. Safety temperature limiters (STB) are adjusted in the upper section of the scale. Special adjustments are possible upon request.				

JUMO GmbH & Co. KG
Delivery address: Mackenrodtstraße 14
36039 Fulda, Germany
Postal address: 36035 Fulda, Germany
Phone: +49 661 6003-0
Fax: +49 661 6003-607
Email: mail@jumo.net
Internet: www.jumo.net

JUMO UK LTD
JUMO House
Temple Bank, Riverway
Harlow, Essex, CM20 2DY, UK
Phone: +44 1279 63 55 33
Fax: +44 1279 62 50 29
Email: sales@jumo.co.uk
Internet: www.jumo.co.uk

JUMO Process Control, Inc.
6724 Joy Road
East Syracuse, NY 13057, USA
Phone: +1 315 437 5866
Fax: +1 315 437 5860
Email: info.us@jumo.net
Internet: www.jumousa.com

Dimensions

Single thermostat

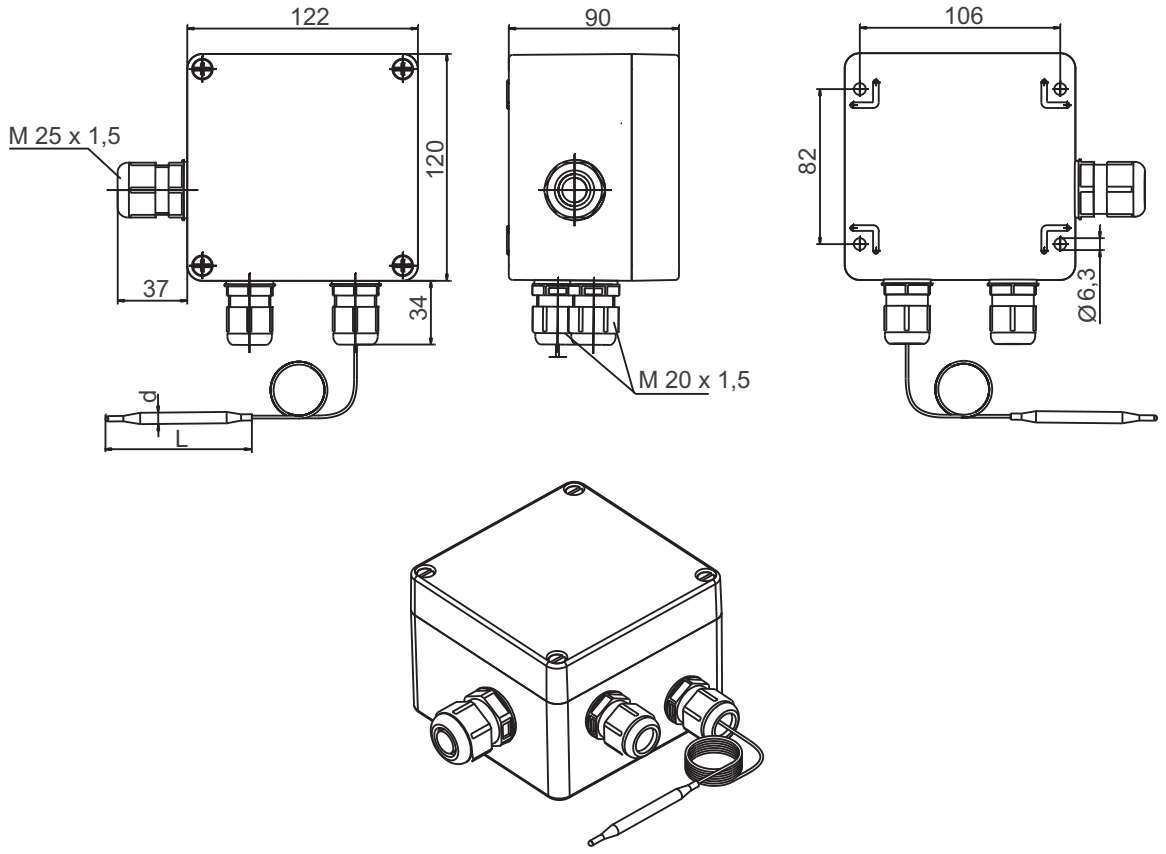

JUMO GmbH & Co. KG
Delivery address: Mackenrodtstraße 14
36039 Fulda, Germany
Postal address: 36035 Fulda, Germany
Phone: +49 661 6003-0
Fax: +49 661 6003-607
Email: mail@jumo.net
Internet: www.jumo.net

JUMO UK LTD
JUMO House
Temple Bank, Riverway
Harlow, Essex, CM20 2DY, UK
Phone: +44 1279 63 55 33
Fax: +44 1279 62 50 29
Email: sales@jumo.co.uk
Internet: www.jumo.co.uk

JUMO Process Control, Inc.
6724 Joy Road
East Syracuse, NY 13057, USA
Phone: +1 315 437 5866
Fax: +1 315 437 5860
Email: info.us@jumo.net
Internet: www.jumousa.com

Double thermostat

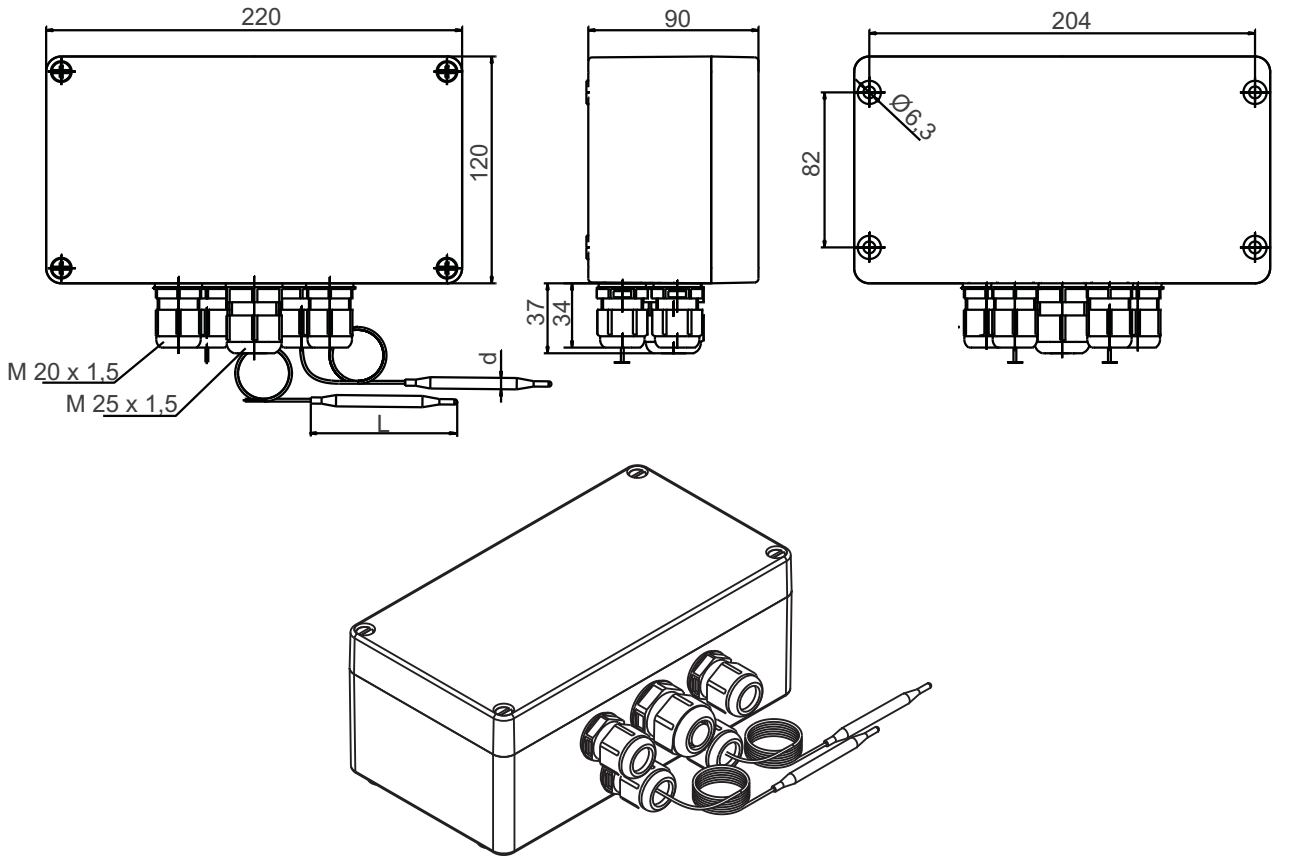

JUMO GmbH & Co. KG
Delivery address: Mackenrodtstraße 14
36039 Fulda, Germany
Postal address: 36035 Fulda, Germany
Phone: +49 661 6003-0
Fax: +49 661 6003-607
Email: mail@jumo.net
Internet: www.jumo.net

JUMO UK LTD
JUMO House
Temple Bank, Riverway
Harlow, Essex, CM20 2DY, UK
Phone: +44 1279 63 55 33
Fax: +44 1279 62 50 29
Email: sales@jumo.co.uk
Internet: www.jumo.co.uk

JUMO Process Control, Inc.
6724 Joy Road
East Syracuse, NY 13057, USA
Phone: +1 315 437 5866
Fax: +1 315 437 5860
Email: info.us@jumo.net
Internet: www.jumousa.com

Room thermostat

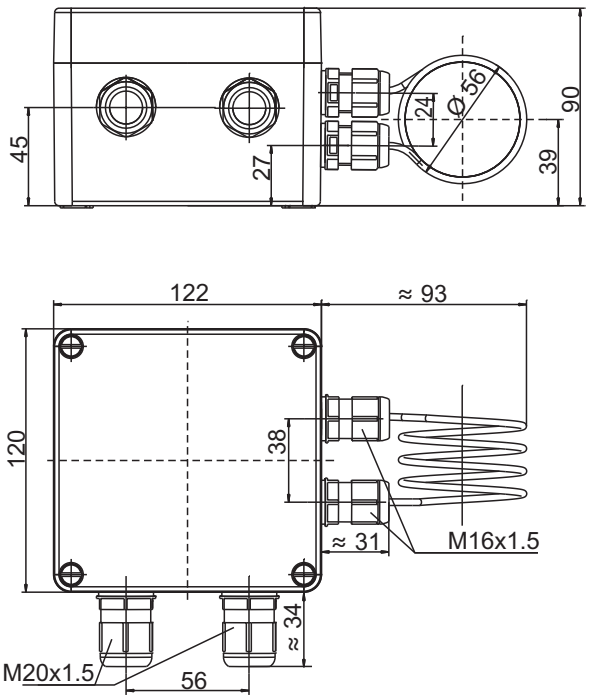

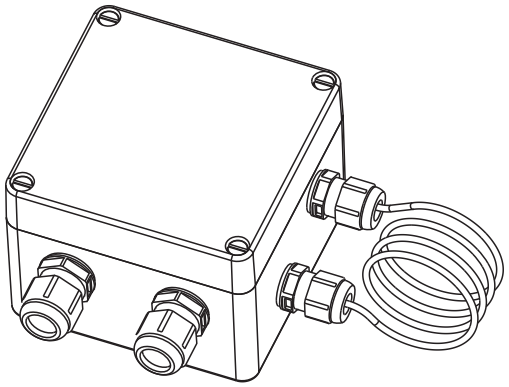

JUMO GmbH & Co. KG
Delivery address: Mackenrodtstraße 14
36039 Fulda, Germany
Postal address: 36035 Fulda, Germany
Phone: +49 661 6003-0
Fax: +49 661 6003-607
Email: mail@jumo.net
Internet: www.jumo.net

JUMO UK LTD
JUMO House
Temple Bank, Riverway
Harlow, Essex, CM20 2DY, UK
Phone: +44 1279 63 55 33
Fax: +44 1279 62 50 29
Email: sales@jumo.co.uk
Internet: www.jumo.co.uk

JUMO Process Control, Inc.
6724 Joy Road
East Syracuse, NY 13057, USA
Phone: +1 315 437 5866
Fax: +1 315 437 5860
Email: info.us@jumo.net
Internet: www.jumousa.com

Thermostat with rigid thermowell (process connection 74)

Thermowells can be ordered separately according to data sheet 605057 (**with** ATEX approval) or data sheet 606710 (**without** ATEX approval)

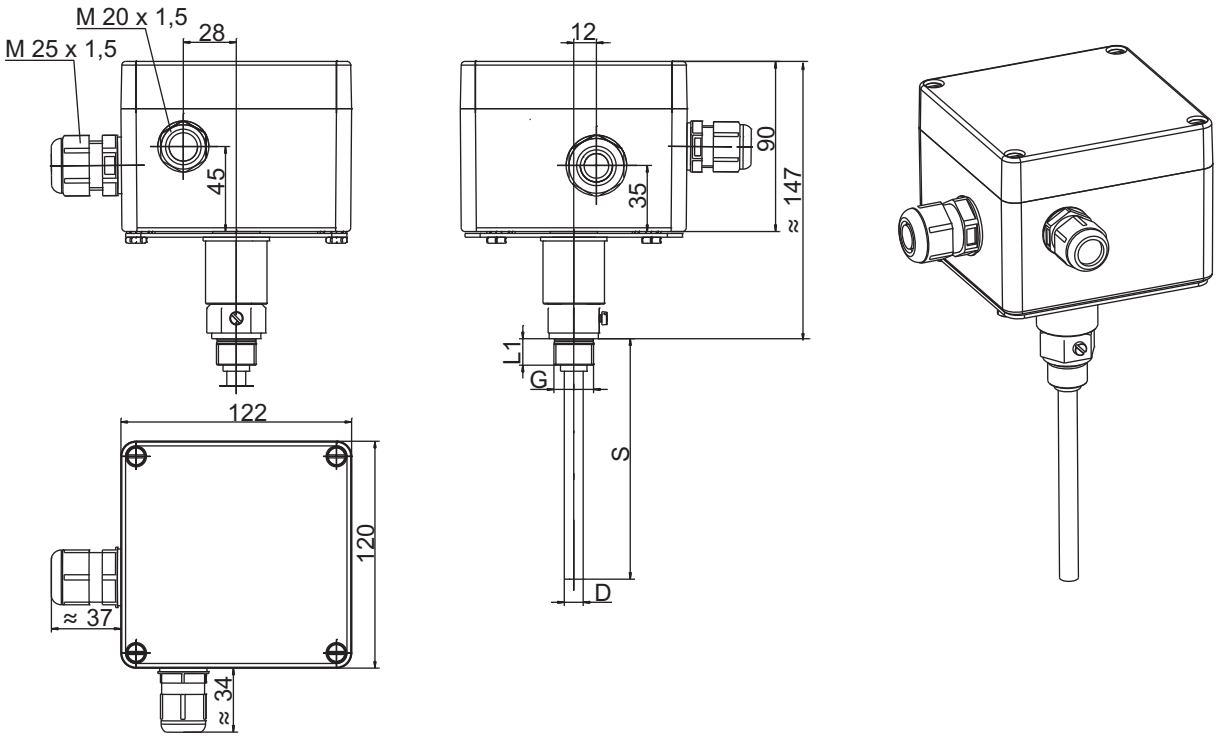

Thermostat with sleeve and heat sink, limit value > 150 to 300 °C

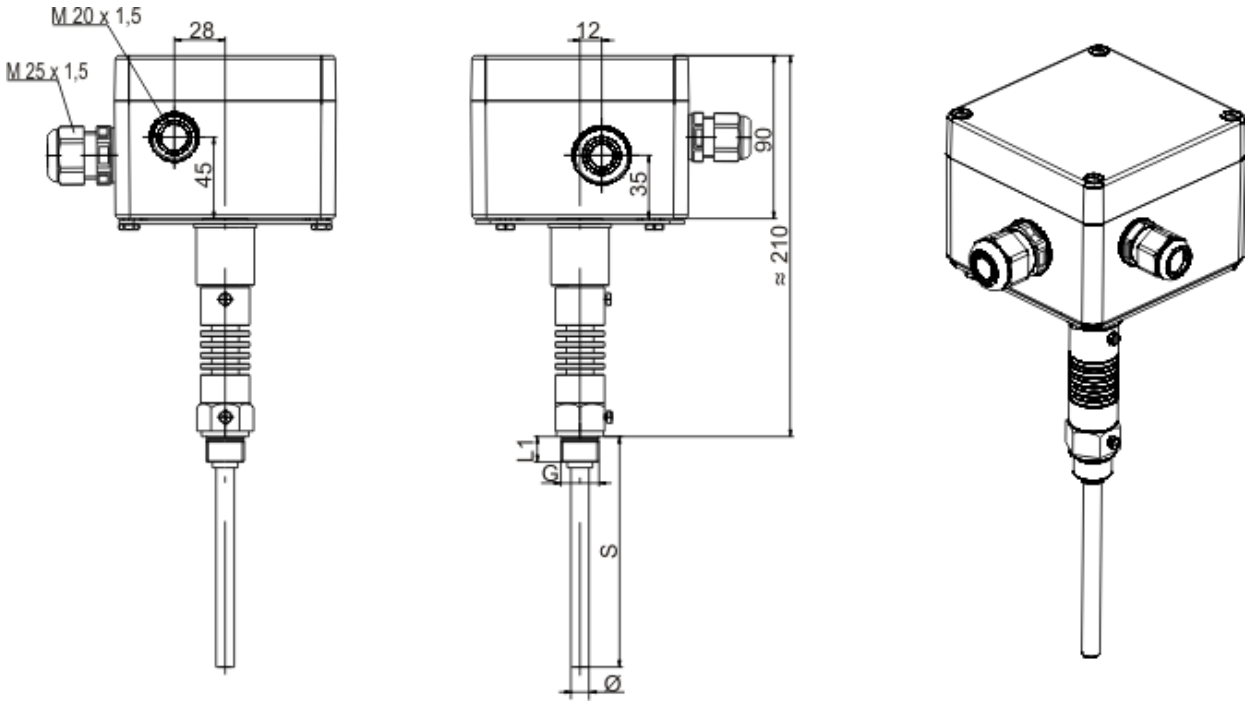

JUMO GmbH & Co. KG
Delivery address: Mackenrodtstraße 14
36039 Fulda, Germany
Postal address: 36035 Fulda, Germany
Phone: +49 661 6003-0
Fax: +49 661 6003-607
Email: mail@jumo.net
Internet: www.jumo.net

JUMO UK LTD
JUMO House
Temple Bank, Riverway
Harlow, Essex, CM20 2DY, UK
Phone: +44 1279 63 55 33
Fax: +44 1279 62 50 29
Email: sales@jumo.co.uk
Internet: www.jumo.co.uk

JUMO Process Control, Inc.
6724 Joy Road
East Syracuse, NY 13057, USA
Phone: +1 315 437 5866
Fax: +1 315 437 5860
Email: info.us@jumo.net
Internet: www.jumousa.com

Double thermostat with sleeve (process connection 74)

Thermowells can be ordered separately according to data sheet 605057 (**with** ATEX approval) or data sheet 606710 (**without** ATEX approval)

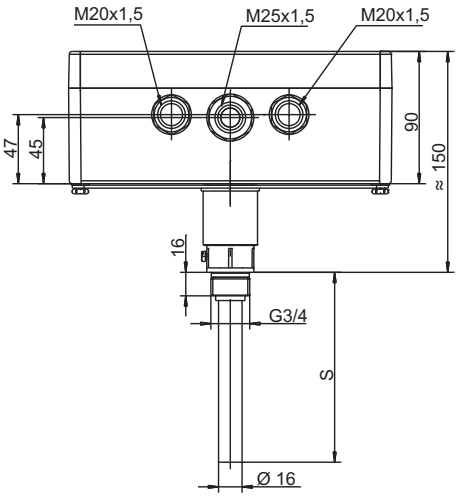

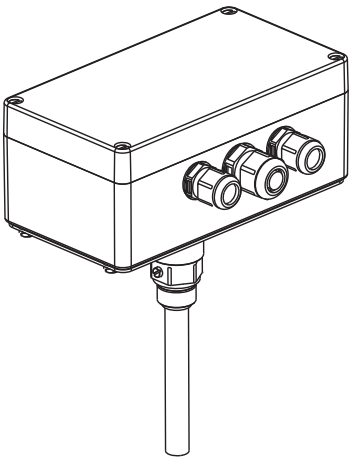

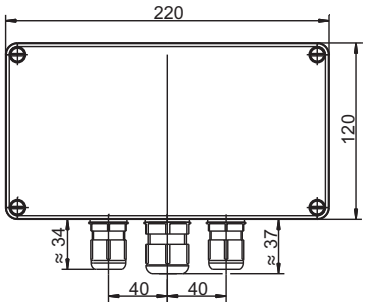

Double thermostat with sleeve and heat sink, limit value > 150 to 300 °C

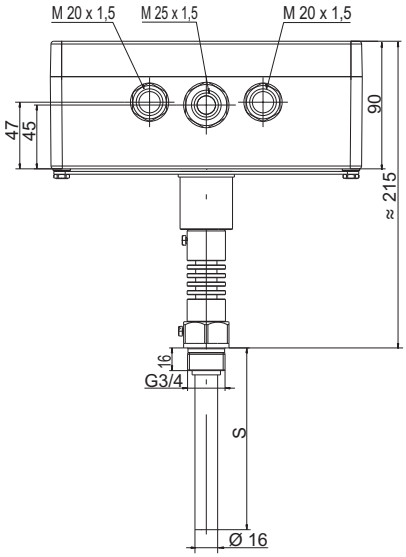

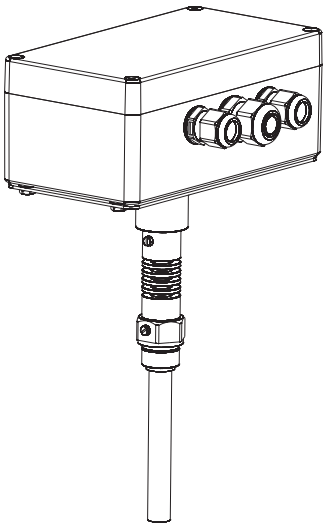

JUMO GmbH & Co. KG
Delivery address: Mackenrodtstraße 14
36039 Fulda, Germany
Postal address: 36035 Fulda, Germany
Phone: +49 661 6003-0
Fax: +49 661 6003-607
Email: mail@jumo.net
Internet: www.jumo.net

JUMO UK LTD
JUMO House
Temple Bank, Riverway
Harlow, Essex, CM20 2DY, UK
Phone: +44 1279 63 55 33
Fax: +44 1279 62 50 29
Email: sales@jumo.co.uk
Internet: www.jumo.co.uk

JUMO Process Control, Inc.
6724 Joy Road
East Syracuse, NY 13057, USA
Phone: +1 315 437 5866
Fax: +1 315 437 5860
Email: info.us@jumo.net
Internet: www.jumousa.com

Connection diagram

The connection diagram in the data sheet provides information on product selection.

For the electrical connection, only use the installation instructions or the operating manual.

JUMO exTHERM-AT				
	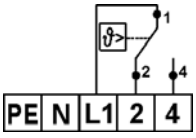 TW/STW	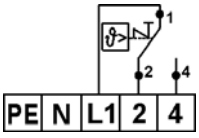 STB	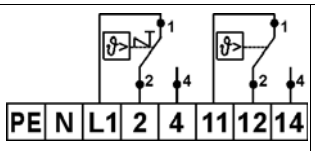 STB/TW/STW	ϑ> = upward adjustment ϑ< = downward adjustment

JUMO GmbH & Co. KG
Delivery address: Mackenrodtstraße 14
36039 Fulda, Germany
Postal address: 36035 Fulda, Germany
Phone: +49 661 6003-0
Fax: +49 661 6003-607
Email: mail@jumo.net
Internet: www.jumo.net

JUMO UK LTD
JUMO House
Temple Bank, Riverway
Harlow, Essex, CM20 2DY, UK
Phone: +44 1279 63 55 33
Fax: +44 1279 62 50 29
Email: sales@jumo.co.uk
Internet: www.jumo.co.uk

JUMO Process Control, Inc.
6724 Joy Road
East Syracuse, NY 13057, USA
Phone: +1 315 437 5866
Fax: +1 315 437 5860
Email: info.us@jumo.net
Internet: www.jumousa.com

Order details

	(1)	**Basic type**			
605055		JUMO exTHERM-AT – Explosion-proof surface-mounted thermostat for zones 1, 2, 21, and 22			
	(2)	**Basic type extension**			
0002		Temperature monitor (TW)			
0020		Safety temperature monitor (STW)			
0070		Safety temperature limiter (STB)			
0270		Temperature monitor/Safety temperature limiter (TW/STB)			
2070		Safety temperature monitor/Safety temperature limiter (STW/STB)			
	(3)	**Design type**			
5		Surface-mounted thermostat			
6		Room thermostat			
	(4)	**Housing**			
4		Polyester case black (standard)			
6		Stainless steel housing			
	(5)	**Control range (TW)**			
013		-20 to +40 °C			
014		-20 to +50 °C			
026		0 to 120 °C			
045		20 to 400 °C			
195		0 to 190 °C			
427		60 to 300 °C			
429		70 to 190 °C			
532		130 to 190 °C			
539		140 to 500 °C			
553		150 to 300 °C			
	(6)	**Limit value range (STB)**			
000		Only single thermostat			
014		-20 to +50 °C			
026		0 to 120 °C			
045		20 to 400 °C			
195		0 to 190 °C			
427		60 to 300 °C only STB gas filling			
429		70 to 190 °C			
532		130 to 190 °C			
539		140 to 500 °C			
553		150 to 300 °C			
	(7)	**Switching capacity**			
11		AC/DC 24 V, 0.1 A			
21		AC 230 V, 16 (2.5) A, cos φ = 1 (0.6)			
25		AC 230 V, 25 (4) A, cos φ = 1 (0.6)			
41		AC 400 V, 16 A			
	(8)	**Admissible ambient temperature at the housing**			
340		-55 to +40 °C	T6	(+70 °C T4)	(+55 °C T4 at 25 A)
467		-40 to +40 °C	T6	(+70 °C T4)	(+55 °C T4 at 25 A)
	(9)	**Switching differential**			
00		None			
25		Approx. 2.5 %			
70		Approx. 7 %			

JUMO GmbH & Co. KG
Delivery address: Mackenrodtstraße 14
36039 Fulda, Germany
Postal address: 36035 Fulda, Germany
Phone: +49 661 6003-0
Fax: +49 661 6003-607
Email: mail@jumo.net
Internet: www.jumo.net

JUMO UK LTD
JUMO House
Temple Bank, Riverway
Harlow, Essex, CM20 2DY, UK
Phone: +44 1279 63 55 33
Fax: +44 1279 62 50 29
Email: sales@jumo.co.uk
Internet: www.jumo.co.uk

JUMO Process Control, Inc.
6724 Joy Road
East Syracuse, NY 13057, USA
Phone: +1 315 437 5866
Fax: +1 315 437 5860
Email: info.us@jumo.net
Internet: www.jumousa.com

	(10)	**Switching differential 2**
00		None
25		Approx. 2.5 %
70		Approx. 7 %
	(11)	**Capillary length**
0		0 mm
1000		1,000 mm
3000		3,000 mm
	(12)	**Capillary length 2**
0		0 mm
1000		1,000 mm
3000		3,000 mm
	(13)	**Capillary material**
20		CrNi
	(14)	**Process connection**
10		Plain cylindrical probe
15		Spiral probe
74		Mounting adaptor for thermowell
	(15)	**Probe diameter**
4		4 mm
6		6 mm
56		56 mm
	(16)	**Probe diameter 2**
0		Only single thermostat
4		4 mm
6		6 mm
	(17)	**Insertion length EL in mm**
0		Only probe
100		100 mm
150		150 mm
200		200 mm
300		300 mm
	(18)	**Extra codes**
000		None
073		SIL and IPL approval
083		PESO (India)
084		CCC-Ex (China)
372		IECEx-protection type according to IEC 60079..
861		Protection type IP66 according to DIN EN 60529

	(1)		(2)		(3)		(4)		(5)		(6)		(7)		(8)		(9)		(10)	
Order code		/		-		-		-		-		-		-		-		-		-
Order example	605055	/	0020	-	5	-	4	-	195	-	000	-	21	-	467	-	70	-	00	-

	(11)		(12)		(13)		(14)		(15)		(16)		(17)		(18)
Order code		-		-		-		-		-		-		/	
Order example	1000	-	0	-	20	-	10	-	6	-	0	-	0	/	000

JUMO GmbH & Co. KG
Delivery address: Mackenrodtstraße 14
36039 Fulda, Germany
Postal address: 36035 Fulda, Germany
Phone: +49 661 6003-0
Fax: +49 661 6003-607
Email: mail@jumo.net
Internet: www.jumo.net

JUMO UK LTD
JUMO House
Temple Bank, Riverway
Harlow, Essex, CM20 2DY, UK
Phone: +44 1279 63 55 33
Fax: +44 1279 62 50 29
Email: sales@jumo.co.uk
Internet: www.jumo.co.uk

JUMO Process Control, Inc.
6724 Joy Road
East Syracuse, NY 13057, USA
Phone: +1 315 437 5866
Fax: +1 315 437 5860
Email: info.us@jumo.net
Internet: www.jumousa.com

Stock versions

Designation	Control range (TW)	Capillary length	Probe diameter	Part no.
605055/002-6-4-013-00-21-467-25-00-0-0-20-15-56-0-0/000	-20 to +40 °C	0 mm	56 mm	60003366
605055/0020-5-4-014-000-21-467-70-00-1000-0-20-10-6-0-0/000	-20 to +50 °C	1000 mm	6 mm	60003365
605055/0020-5-4-026-000-21-467-70-00-1000-0-20-10-6-0-0/000	0 to 120 °C	1000 mm	6 mm	60003367
605055/0070-5-4-026-000-21-467-00-00-1000-0-20-10-6-0-0/000	0 to 120 °C	1000 mm	6 mm	60003421
605055/0070-5-4-429-000-21-467-00-00-1000-0-20-10-6-0-0/000	70 to 190 °C	1000 mm	6 mm	60003423
605055/0020-5-4-195-000-21-467-70-00-1000-0-20-10-6-0-0/000	0 to 190 °C	1000 mm	6 mm	60003424
605055/0002-5-4-195-000-21-467-25-00-1000-0-20-10-6-0-0/000	0 to 190 °C	1000 mm	6 mm	60003425
605055/0020-5-4-427-000-21-467-70-00-1000-0-20-10-6-0-0/000	60 to 300 °C	1000 mm	6 mm	60003426