Series 84

22.5 mm IP67 42 V 100 mA E-stop: IP65 3 A 250 VAC

INDICATOR | PUSHBUTTON | E-STOP

Choose one component from each of the coloured sections to assemble a complete switch.
For other options or further information please contact your local sales office.

Product Profile

The Series 84 consists of indicators, pushbuttons and low depth monoblock Emergency-stop switches. The indicators and pushbuttons are a modular system of lens, actuator and switching element with connections using plug-in terminals.

Within the many different colours, the lenses are available either in plastic or anodised aluminium.

Technical data see page 126

Emergency-stop switches

- IP65 Protection (Emergency-stop switches)
- Switch Rating for emergency-stop switch: 3 A/120 VAC, 1.5 A/240 VAC
- LED Voltage for Emergency-stop switch: 5-30 VDC
- Compact Emergency-stop meets EN 60947-5-1, EN 60947-5-5 and DIN EN ISO 13850
- Mounting into 22.5 mm mounting hole
- Switching elements with solder/plug-in terminal or ribbon cable, 300 mm long

Actuators/Elements

- IP67 Protection (Switches and Indicators)
- Illumination using Single or Multi-LED's in red, orange, yellow, green, blue or white
- Switch Rating for indicator and pushbutton: 10 mA – 100 mA, 50 mVAC/VDC – 42 VAC/VDC
- Flush Mounting into 22.5 mm mounting hole
- Switching elements with solder/plug-in terminal or ribbon cable, 300 mm long

Detailed product selectors pages see 122-125

Illuminated Emergency-stop switch



Emergency-stop red LED illuminated, plug-in terminals, twist release, 32 mm diameter for 22.5 mm mounting, foolproof to EN 60947-5-5

Part No.	Contact type
84-5021.2B20	1NC
84-5041.2B20	2NC
84-5031.2B20	1NC/1NO



Emergency-stop red LED illuminated, ribbon cable, twist release, 32 mm diameter for 22.5 mm mounting, foolproof to EN 60947-5-5

Part No.	Contact type
84-5021.2B40	1NC
84-5041.2B40	2NC
84-5031.2B40	1NC/1NO

Emergency-stop switch



Emergency-stop non illuminated, plug-in terminals, twist release, 32 mm diameter for 22.5 mm mounting, foolproof to EN 60947-5-5

Part No.	Contact type
84-5020.0020	1NC
84-5040.0020	2NC
84-5030.0020	1NC/1NO



Emergency-stop non illuminated, ribbon cable, twist release, 32 mm diameter for 22.5 mm mounting, foolproof to EN 60947-5-5

Part No.	Contact type
84-5020.0040	1NC
84-5040.0040	2NC
84-5030.0040	1NC/1NO

Choose one component from each of the coloured sections to assemble a complete switch.
For other options or further information please contact your local sales office.

ELEMENT ACCESSORIES

Indicator actuator



Indicator actuator for flush mount, black plastic, IP67 front protection, 22.5 mm mounting

	Part No.	Material
	84-0100.0	Plastic
	84-0200.7	Aluminium

For complete switch also order A

Actuator Halo Illumination



Halo Indicator actuator for flush mount, plastic translucent, IP67 front protection, 22.5 mm mounting

	Part No.
	84-0090.7

For complete indicator: order lens 84.7205.X00X or 84-7202.X00A

For complete switch also order A

Illum. pushbutton actuator



Pushbutton actuator for flush mount, black plastic, impulse function; IP67 front protection, 22.5 mm mounting

	Part No.	Material
Black	84-1101.0	Plastic
Red	84-1201.2	Aluminium
Yellow	84-1201.4	Aluminium
Green	84-1201.5	Aluminium
Blue	84-1201.6	Aluminium
Natural	84-1201.7	Aluminium

For complete switch also order A

Actuator Halo Illumination



Halo Pushbutton actuator for flush mount, plastic translucent, IP67 front protection, 22.5 mm mounting

	Part No.
	84-1091.7

For complete pushbutton: order lens 84.7205.X00X or 84-7202.X00A

For complete switch also order A

Indicator element



Indicator element, 24 VDC LED, plug-in terminals

	Part No.	
Red	84-8001.2620	Single-chip LED
Orange	84-8001.3620	Single-chip LED
Yellow	84-8001.4620	Single-chip LED
Green	84-8001.5620	Single-chip LED
Blue	84-8001.6620	Single-chip LED
White	84-8001.9620	Single-chip LED



Indicator element, bi-colour, 24 VDC, L/S, plug-in terminals

Colour	Part No.
Red/Green	84-8005.8620
Yellow/Green	84-8005.7620

INDICATOR | PUSHBUTTON | E-STOP

Choose one component from each of the coloured sections to assemble a complete switch.
For other options or further information please contact your local sales office.

Indicator element



Indicator element, bi-colour, 24 VDC, ribbon cable 300 mm, three strands, 1NO

Colour	Part No.
Red/Green	84-8005.8640
Yellow/Green	84-8005.7640

Switching element



Switching element, 24 VDC LED, plug-in terminals, 1NO

Colour	Part No.	Comment
Red	84-8511.2620	Single-chip LED
Orange	84-8511.3620	Single-chip LED
Yellow	84-8511.4620	Single-chip LED
Green	84-8511.5620	Single-chip LED
Blue	84-8511.6620	Single-chip LED
White	84-8511.9620	Single-chip LED
	84-8510.0020	No LED - switching element only



Switching element, 24 VDC, IP67; ribbon cable 300 mm, four strands, 1NO

Colour	Part No.	Comment
Red	84-8511.2640	Single-chip LED
Orange	84-8511.3640	Single-chip LED
Yellow	84-8511.4640	Single-chip LED
Green	84-8511.5640	Single-chip LED
Blue	84-8511.6640	Single-chip LED
White	84-8511.9640	Single-chip LED
	84-8510.0040	No LED - switching element only

Switching element



Switching element, bi-colour, 24 VDC, IP67; ribbon cable, 300 mm, five strands, 1NO

Colour	Part No.
Red/Green	84-8515.8640
Yellow/Green	84-8515.7640
	Not recommended for Halo Illumination

A Accessories



Lens, plastic for flush mount, round indicator and pushbutton actuators

Colour	Part No.	Comment
Red	84-7111.200	
Yellow	84-7111.400	
Green	84-7111.500	
Blue	84-7111.600	
Clear	84-7111.700	
Black	84-7121.000	Not for illumination



Lens, plastic; transparent; illuminated ring; flat

Colour	Part No.
Red	84-7111.201
Orange	84-7111.301
Yellow	84-7111.401
Green	84-7111.501
Blue	84-7111.601
Clear	84-7111.701

Choose one component from each of the coloured sections to assemble a complete switch.
For other options or further information please contact your local sales office.

ELEMENT | A ACCESSORIES

A Accessories



Recomended Lens for Halo illumination, aluminium, flat raised

Colour	Part No.	Comment
Red	84-7211.200A	for Halo
Yellow	84-7211.400A	for Halo
Green	84-7211.500B	for Halo
Blue	84-7211.600A	for Halo
Aluminium	84-7211.800A	for Halo
Black	84-7211.000A	for Halo



Recomended Lens for Halo illumination, aluminium, convex raised

Colour	Part No.	Comment
Red	84-7202.200A	for Halo
Yellow	84-7202.400A	for Halo
Green	84-7202.500A	for Halo
Blue	84-7202.600A	for Halo
Aluminium	84-7202.800A	for Halo
Black	84-7202.000A	for Halo



Lens, aluminium flat – with dot

Colour	Part No.
Red	84-7211.200
Yellow	84-7211.400
Green	84-7211.500
Blue	84-7211.600
Aluminium	84-7211.800
Black	84-7211.000

A Accessories



Lens, aluminium raised – with dot

Colour	Part No.
Red	84-7215.200
Yellow	84-7215.400
Green	84-7215.500
Blue	84-7215.600
Aluminium	84-7215.800
Black	84-7215.000



Emergency-stop switch enclosure with 22.5 mm ∅ mounting hole, 65 mm (w) x 65 mm (h) x 57 mm (d), anti twist hole. Cable gland M16 or M20, IP66

Image	Part No.	Thread
1	61-9480.5	
2	61-9481.6	M16
3	704-945.6	M20



Lens remover for flush mount, mounting tool and switching element remover

Image	Part No.	Product description
1	61-9730.0	Lens remover for flush mount
2	84-997	Mounting tool
3	84-998	Switching element remover
4	84-996	Mounting tool, E-stop

Series 84
Product Selector

Part Number Assistant

Featured here are our product combinations.
Other options available on request.

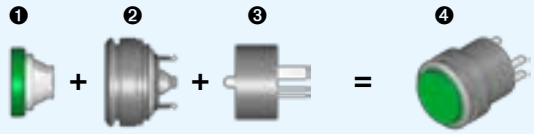

Illuminated
(Illuminated lens, non-illuminated bezel)

Lens ❶

Description		Illuminated ring	Illum. On/Off	Illum. Stand-by	Transparent	Transparent	Spot illumination	Spot illumination
Material		Plastic	Plastic	Plastic	Plastic	Plastic	Aluminium	Aluminium
Shape		Flush	Flush	Flush	Flush	Flush	Flush	Flush
Mounting type		Level with bezel	Level with bezel	Level with bezel	Level with bezel	Raised above bezel	Level with bezel	Raised above bezel
Lens colour	Black						84-7211.000	84-7215.000
	Red	84-7111.201	84-7111.202	84-7111.203	84-7111.200	84-7115.200	84-7211.200	84-7215.200
	Orange	84-7111.301			84-7111.300	84-7115.300		
	Yellow	84-7111.401			84.7111.400	84-7115.400	84-7211.400	84-7215.400
	Green	84-7111.501	84-7111.502	84-7111.503	84-7111.500	84-7115.500	84-7211.500	84-7215.500
	Blue	84-7111.601	84-7111.602	84-7111.603	84-7111.600	84-7115.600	84-7211.600	84-7215.600
	Transparent	84-7111.701	84-7111.702	84-7111.703	84-7111.700	84-7115.700		
	Anodised aluminium						84-7211.800	84-7215.800
	Grey							
Bi-colour possible		X	X	X			X	X
Marking of marking plate possible					X	X		

Actuator (with bezel) ❷

Front dimension		25 mm dia.		25 mm dia.		25 mm dia.		40 mm dia.
Mounting hole		22.5 mm dia.		22.5 mm dia.		22.5 mm dia.		30.5 mm dia.
Front protection		IP40		IP67		IP67		IP67
Actuator for		Illum. pushbutton	Indicator	Illum. pushbutton	Indicator	Illum. pushbutton	Indicator	Illum. pushbutton
Bezel material		Plastic	Plastic	Plastic	Plastic	Aluminium	Aluminium	Aluminium
bezel colour	Black	84-2101.0	84-3100.0	84-1101.0	84-0100.0	84-1201.0		
	Red					84-1201.2		
	Yellow					84-1201.4		
	Green					84-1201.5		
	Blue					84-1201.6		
	Natural					84-1201.7	84-0200.7	84-1221.7
	White translucent							

Switching element ❸

LEDs and LED-series resistors are integrated Switch rating: Voltage 50 mVAC/DC … 42 VAC/DC Current 10 µA … 100 mA at 240 Ω Power 2 W								
Terminal		Cable 300 mm		Plug-in 2.8 x 0.8 mm		Cable 300 mm		Plug-in
Switching element for		Illum. pushbutton	Indicator	Illum. pushbutton	Indicator	Illum. pushbutton	Indicator	Illum. pushbutton
Operating voltage/-current of LED		12 VDC, 10 mA	12 VDC, 10 mA	12 VDC, 10 mA	12 VDC, 10 mA	24 VDC, 10 mA	24 VDC, 10 mA	24 VDC, 10 mA
LED colour	Red	84-8511.2340	84-8001.2340	84-8511.2320	84-8001.2320	84-8511.2640	84-8001.2640	84-8511.2620
	Orange	84-8511.3340	84-8001.3340	84-8511.3320	84-8001.3320	84-8511.3640	84-8001.3640	84-8511.3620
	Yellow	84-8511.4340	84-8001.4340	84-8511.4320	84-8001.4320	84-8511.4640	84-8001.4640	84-8511.4620
	Green	84-8511.5340	84-8001.5340	84-8511.5320	84-8001.5320	84-8511.5640	84-8001.5640	84-8511.5620
	Blue	84-8511.6340	84-8001.6340	84-8511.6320	84-8001.6320	84-8511.6640	84-8001.6640	84-8511.6620
	White	84-8511.9340	84-8001.9340	84-8511.9320	84-8001.9320	84-8511.9640	84-8001.9640	84-8511.9620
Bi-colour LED red/green								
Bi-colour LED yellow/green								
Non-illuminated								

Accessories (optional)

Accessories part	Marking plate	Legend frame	Legend plate insert	
Description	Marking on plate is possible by engraving or hot stamping. Specific symbols and markings are available on request.	30 x 50 mm alu black adhesive for 25 mm dia. devices	14.5 x 23.5 mm alu natural adhesive	14.5 x 23.5 mm alu black adhesive
Part-No.	61-9707.7	61-9980.0	704.968.0	704.968.1

Example of complete switch ❹

Illuminated pushbutton consisting of

Items no.	Part	Part No.
1	Lens: plastic; green; transparent; raised	84-7115.500
2	Actuator: aluminium; natural; IP67	84-1201.7
3	Switching element: LED white; 12 VDC; 10 mA; plug-in terminal 2.8 x 0.8 mm	84-8511.9320
Marking plate	Engraving on marking plate “START”; 4 mm letters; black filled	

Dimensions / Mounting types: Refer to last page

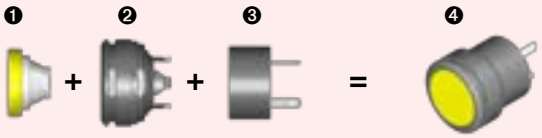



Non-illuminated (Lens and bezel non-illuminated)

Halo Illumination (Illuminated bezel)



Opaque
Plastic
Flush
Level with bezel

84-7121.000

84-7121.800



Opaque
Plastic
Flush
Raised above bezel

84-7125.000

84-7125.800



Opaque
Aluminium
Flush
Level with bezel

84-7201.000
84-7201.200
84-7201.400
84-7201.500
84-7201.600
84-7201.800



Opaque
Aluminium
Flush
Raised above bezel

84-7205.000
84-7205.200
84-7205.400
84-7205.500
84-7205.600
84-7205.800



Opaque
Aluminium
Convex
Level with bezel

84-7202.000
84-7202.200
84-7202.400
84-7202.500
84-7202.600
84-7202.800



Opaque
Aluminium
Convex
Raised above bezel

84-7202.000A
84-7202.200A
84-7202.400A
84-7202.500A
84-7202.600A
84-7202.800A



Opaque
Plastic
Mushroom
Raised above bezel

84-7124.000A
84-7124.200A
84-7124.400A
84-7124.500A
84-7124.600A



Opaque
Aluminium
Flush
Raised above bezel

84-7205.000A
84-7205.200A
84-7205.400A
84-7205.500B
84-7205.600A
84-7205.800A



Opaque
Aluminium
Convex
Raised above bezel

84-7202.000A
84-7202.200A
84-7202.400A
84-7202.500A
84-7202.600A
84-7202.800A



25 mm dia.
22.5 mm dia.
IP40
Pushbutton
Plastic

84-2101.0



25 mm dia.
22.5 mm dia.
IP67
Pushbutton
Plastic

84-1101.0



25 mm dia.
22.5 mm dia.
IP67
Pushbutton
Aluminium

84-1201.0
84-1201.2
84-1201.4
84-1201.5
84-1201.6
84-1201.7



40 mm dia.
30.5 mm dia.
IP67
Pushbutton
Aluminium

84-1221.7



25 mm dia.
22.5 mm dia.
IP67

Illum. pushbutton
Plastic

84-1091.7

Indicator
Plastic

84-0090.7



2.8 x 0.8 mm
Indicator
24 VDC, 10 mA

84-8001.2620
84-8001.3620
84-8001.4620
84-8001.5620
84-8001.6620
84-8001.9620



Cable 300 mm
Illum. pushbutton
24 VDC, 20 mA

84-8515.8640
84-8515.7640



Cable 300 mm
Indicator
24 VDC, 20 mA

84-8005.8640
84-8005.7640



Plug-in 2.8 x 0.8 mm
Indicator
24 VDC, 20 mA

84-8005.8620
84-8005.7620



Cable 300 mm
Pushbutton

84-8510.0040



Plug-in 2.8 x 0.8 mm
Pushbutton

84-8510.0020

All switching elements of the “illuminated” range may be used.
Bi-colour switching elements are not recommended.

Please refer to blue area



Front protective cap
Silicon, for flat lenses only

84-9103.7



Blind plug
Size 25 mm dia. black for 25 mm dia. devices

61-9453.0



Blind plug
Size 36 mm dia. black for 40 mm dia. devices

704.964.8



Flat receptacle
2.8 x 0.8 mm

84-9420



Insulation sleeve
For flat receptacle

31-929



Plug
Two plugs are needed for IP67 rear protection of switching element

84-900



Lens remover

61-9730.0



Mounting tool
For tightening or loosening of fixing nut of 25 mm dia. devices

84-997



Dismantling tool
For dismantling of switching element of actuator

84-998

Colour of metal part

Anodised aluminium parts may have visible variations due to technical production reasons.

Additional colours are available on request.

For in-depth information, please refer to the EAO catalogue.

www.eao.com/84STD-ps_en

eao

Series 84 PCB Product Selector Part Number Assistant

Featured here are our product combinations.
Other options available on request.

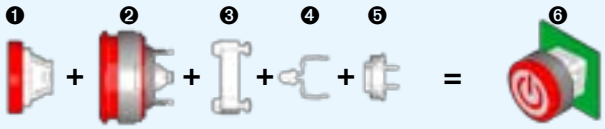

Illuminated
(Illuminated lens, non-illuminated bezel)

Lens ❶

								
Description		Illuminated ring	Illum. On/Off	Illum. Stand-by	Transparent	Transparent	Spot illumination	Spot illumination
Material		Plastic	Plastic	Plastic	Plastic	Plastic	Aluminium	Aluminium
Shape		Flush	Flush	Flush	Flush	Flush	Flush	Flush
Mounting type		Level with bezel	Level with bezel	Level with bezel	Level with bezel	Raised above bezel	Level with bezel	Raised above bezel
Lens colour	Black						84-7211.000	84-7215.000
	Red	84-7111.201	84-7111.202	84-7111.203	84-7111.200	84-7115.200	84-7211.200	84-7215.200
	Orange	84-7111.301			84-7111.300	84-7115.300		
	Yellow	84-7111.401			84.7111.400	84-7115.400	84-7211.400	84-7215.400
	Green	84-7111.501	84-7111.502	84-7111.503	84-7111.500	84-7115.500	84-7211.500	84-7215.500
	Blue	84-7111.601	84-7111.602	84-7111.603	84-7111.600	84-7115.600	84-7211.600	84-7215.600
	Transparent	84-7111.701	84-7111.702	84-7111.703	84-7111.700	84-7115.700		
	Anodised aluminium						84-7211.800	84-7215.800
	Grey							
Bi-colour possible		X	X	X			X	X
Marking on plate possible					X	X		

Actuator (with bezel) ❷

								
Front dimension		25 mm dia.		25 mm dia.		25 mm dia.		40 mm dia.
Mounting hole		22.5 mm dia.		22.5 mm dia.		22.5 mm dia.		30.5 mm dia.
Front protection		IP40		IP67		IP67		IP67
Actuator for		Illum. pushbutton	Indicator	Illum. pushbutton	Indicator	Illum. pushbutton	Indicator	Illum. pushbutton
Bezel material		Plastic	Plastic	Plastic	Plastic	Aluminium	Aluminium	Aluminium
bezel colour	Black	84-2101.0	84-3100.0	84-1101.0	84-0100.0	84-1201.0		
	Red					84-1201.2		
	Yellow					84-1201.4		
	Green					84-1201.5		
	Blue					84-1201.6		
	Natural					84-1201.7	84-0200.7	84-1221.7
	White translucent							
	Colourless transparent							

Flange ❸

		
Standard version (non-illuminated)	92-960.0	
Halo illumination multi-colour bezel		

LED ❹

LED series resistor has to be defined by user.		 or 		
LED for switching element*				
LED colour	Red	2.1 VDC, 20 mA	10-2602.3202L	
	Orange	2.1 VDC, 20 mA	10-2602.3203L	
	Yellow	2.2 VDC, 20 mA	10-2602.3174D	
	Green	3.5 VDC, 20 mA	10-2602.3205L	
	Blue	3.5 VDC, 20 mA	10-2602.3206L	
	White	3.5 VDC, 20 mA	10-2602.3209L	
Bi-colour LED red/green		1.9/3.5 VDC, 20 mA		10-2603.320AL
Bi-colour LED yellow/green		2.0/3.2 VDC, 20 mA		10-2603.320CL
LED for Halo		up to 8 pcs. possible		

Switching element ❺

Switch rating: Voltage 50 mVAC/DC ... 42 VAC/DC Current 10 µA ...100 mA at 240 Ω Power 2 W		
Terminal, PCB mount	X	X
Switching element for	Illum. pushbutton	Indicator
without LED	92-851.342	92-800.042

Example of complete switch ❻

Illuminated pushbutton consisting of	Item no.	Part	Part No.
	1	Lens: plastic; red; flush; symbol “Stand by”	84-7111.203
	2	Actuator: aluminium; red; IP67	84-1201.2
Dimensions/Mounting types: Refer to last page	3	Flange: standard version	92-960.0
Accessories: Refer to Product Selector Series 84	4	LED: red; 2.1 VDC; 20 mA	10-2602.3202L
	5	PCB mount switching element without LED	92-851.342

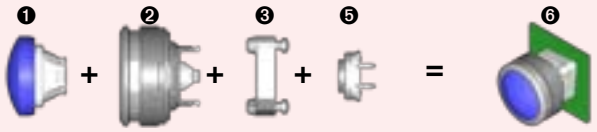

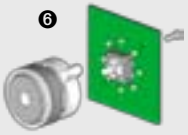

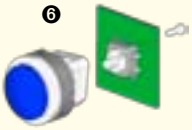

Non-illuminated (Non-illuminated lens and bezel)

Halo Illumination (Multi-colour bezel)

Halo Illumination (Illuminated bezel)



Opaque
Plastic
Flush
Level with bezel

84-7121.000

84-7121.800



Opaque
Plastic
Flush
Raised above bezel

84-7125.000

84-7125.800



Opaque
Aluminium
Flush
Level with bezel

84-7201.000
84-7201.200
84-7201.400
84-7201.500
84-7201.600
84-7201.800



Opaque
Aluminium
Flush
Raised above bezel

84-7205.000
84-7205.200
84-7205.400
84-7205.500
84-7205.600
84-7205.800



Opaque
Aluminium
Convex
Level with bezel

84-7202.000
84-7202.200
84-7202.400
84-7202.500
84-7202.600
84-7202.800



Opaque
Aluminium
Convex
Raised above bezel

84-7202.000A
84-7202.200A
84-7202.400A
84-7202.500A
84-7202.600A
84-7202.800A



Opaque
Plastic
Mushroom
Raised above bezel

84-7124.000A
84-7124.200A
84-7124.400A
84-7124.500A
84-7124.600A

All lenses of the “illuminated” and the “non-illuminated” range may be used (with the exception of the mushroom head cap).

Please refer to blue and red area



Opaque
Aluminium
Flush
Raised above bezel

84-7205.000A
84-7205.200A
84-7205.400A
84-7205.500B
84-7205.600A
84-7205.800A



Opaque
Aluminium
Convex
Raised above bezel

84-7202.000A
84-7202.200A
84-7202.400A
84-7202.500A
84-7202.600A
84-7202.800A



25 mm dia.
22.5 mm dia.
IP40

Pushbutton
Plastic

84-2101.0

Indicator
Plastic

84-3100.0



25 mm dia.
22.5 mm dia.
IP67

Pushbutton
Plastic

84-1101.0

Indicator
Plastic

84-0100.0



25 mm dia.
22.5 mm dia.
IP67

Pushbutton
Aluminium

84-1201.0
84-1201.2
84-1201.4
84-1201.5
84-1201.6
84-1201.7

Indicator
Aluminium

84-0200.7



40 mm dia.
30.5 mm dia.
IP67

Pushbutton
Aluminium

84-1221.7



25 mm dia.
22.5 mm dia.
IP67

Illum. pushbutton
Plastic

84-1081.7

Indicator
Plastic

84-0080.7



25 mm dia.
22.5 mm dia.
IP67

Illum. pushbutton
Plastic

84-1091.7

Indicator
Plastic

84-0090.7



92-960.0



84-960.0



92-960.0

*All LEDs of the “illuminated” range may be used for switching elements

Please refer to blue area



10-2602.3202L
10-2602.3203L
10-2602.3174D
10-2602.3205L
10-2602.3206L
10-2602.3209L

Recommendation:
Osram Hyper Mini TOPLED®



X
Pushbutton
92-851.342





X
Illum. pushbutton
92.851.342

Indicator
92-800.042





X
Illum. pushbutton
92.851.342

Indicator
92-800.042

Colour of metal part

Anodised aluminium parts may have visible variations due to technical production reasons.

Additional colours are available on request.

For in-depth information, please refer to the EAO catalogue.

www.eao.com/84PCB-ps_en

Emergency-stop

Switching system

The double-break switching system can be supplied for the following switching functions:1 Normally closed, 2 Normally closed, 1 Normally closed + 1 Normally open.
The Normally closed contacts have forced opening according to EN IEC 60947-5-1

Material

Connection cable
Polyvinylchloride (PVC), operating temperature up to +65 °C

Mushroom-head cap
Polybutylenterephthalate (PBT), as per UL 94 V0 (red items)

Actuator housing
Polyamide (PA 66), as per UL 94 V0, Flat ribbon cable-cover Polyamide (PA 6.6), as per UL 94 V0

Material of contact
Silver alloy gold plated

Mechanical characteristics

Front panel thickness
Standard 1 ... 4 mm
With emergency-stop protective shroud Typ-Nr. 84-902, 1-3 mm

Mounting hole
22.5 mm dia. as per EN IEC 60947-5-1 with anti-twist device

Terminals
Soldering terminals 2.8 x 0.5 mm (solderable), $CuSn_6$ tin-plated
Flat ribbon cable 2-, 4-, or 6-poles 0.35 mm² (AWG 22)

Tightening torque
Fixing nut 80 Ncm

Actuating force
22 N ±4 N

Actuating travel
approx. 4 mm to release the internal operation part

Mechanical lifetime
≥50 000 cycles of operations

Electrical characteristics

Standards
The devices comply with: EN IEC 60947-5-1, EN IEC 60947-5-5 (Emergency-stop), DIN EN ISO 13850, EN IEC 60204

Illumination
LED red with pole reversal, constant current source

Operation Voltage	5 VDC ... 30 VDC
Current consumption	9.7 mA ... 12.4 mA

Rated Operational Voltage Ue
250 VAC, as per EN IEC 60947-1

Rated Insulation Voltage Ui
250 V, as per EN IEC 60947-1

Rated Impulse Withstand Voltage Uimp
2.5 kV, as per EN IEC 60947-1

Contact resistance
New state ≤50 mΩ, as per DIN IEC 60512-2-3

Isolation resistance
>1011 Ω between the opend contats at 500 VDC, as per DIN IEC 60512-2-10

Electrical life
≥50 000 cycles of operations (inductive cosϕ 0.4), as per EN IEC 60947-5-1

Voltage	120 VAC	240 VAC	125 VDC	250 VDC
Current	3 A	1.5 A	0.55 A	0.27 A

Reduced load ≥50 000 cycles of operations (resistive)

Voltage	1 VAC/DC	42 VAC/DC
Current	100 mA	200 mA

Conventional free air thermal current Ith
5 A, as per EN IEC 60947-5-1
the maximum current in continuous operation and at ambient temperature must not exceed the quoted maximum values.

Switch rating
Switch rating AC with silver contact (gold plated), service category AC-15, as per EN IEC 60947-5-1

Voltage	120 VAC	240 VAC
Current	3 A	1.5 A

Switch rating DC for silver contact (gold plated), service category DC-13, as per EN IEC 60947-5-1 (inductive)

Voltage	12 VDC	24 VDC	48 VDC	60 VDC	125 VDC	250 VDC
Current $_{plug}$	5 A	4 A	2.1 A	1.7 A	0.55 A	0.27 A
Current $_{cable}$	3 A	3 A	2.1 A	1.7 A	0.55 A	0.27 A

Recommended minimum operational data
Silver contacts (gold plated)

Voltage	1 VAC/DC
Current	1 mA

Electric strength
500 VAC, 50 Hz, 1 min. as per DIN IEC 60512-2

Rated conditional short-circuit current
1000 A, type of short-circuit unit 6 A gG, as per EN IEC 60947-5-1

Protection class
Class II, as per EN IEC 60947-5

Overvoltage category
II, as per EN IEC 60947-1

Degree of pollution
3, as per EN IEC 60947-1

Environmental conditions

Operating temperature
–25 °C ... +65 °C

Front protection
IP65, as per EN IEC 60529

Shock resistance
(semi-sinusoidal)
max. 150 m/s², pulse width 11 ms, 3-axis, as per EN IEC 60068-2-27

Vibration resistance
(sinusoidal)
max. 50 m/s² at 10 Hz ... 500 Hz, 10 cycles, 3-axis, as per EN IEC 60068-2-6

Climate resistance
Damp heat, cyclic
96 hours, +25 °C / 97%, +55 °C / 93% relative humidity, as per EN IEC 60068-2-30

Damp heat, steady
56 days, +40 °C / 93% relative humidity, as per EN IEC 60068-2-78

Dry heat
96 hours, +70 °C, as per EN IEC 60068-2-2

Low temperature
96 hours, –40 °C, as per EN IEC 60068-2-1

Saline mist
96 Stunden, +35 °C in chemical solution NaCl, as per EN IEC 60068-2-11

Approvals

Approbations
SEV
UL

Declaration of conformity
CE

Switching element illuminated pushbutton

Switching system

Short-travel switching system with 2 independent contact points and tactile operation. Guarantees reliable switching even of very light loads. Fitted with 1 normally open contact.

Material

Connection cable
Polyvinylchloride (PVC), short-time heat-resistant up to 105 °C

Material of contact
Silver alloy gold plated

Switching element
Thermoplastic polyester (PET, PBT), as per UL 94 V0 and Polyacetale (POM), as per UL 94 HB

Mechanical characteristics

Terminals
Plug-in terminals 2.8 x 0.8 mm (solderable)
Flat ribbon cable 0.5 mm²
PCB terminal

Actuating force
4.0 N ±0.2 N (measured at the lens)

Actuating travel
~0.5 mm

Rebound time
≤1 ms

Resistance to heat of soldering
260 °C, 5 s (PCB assembly)
350 °C, 10 s (when using a soldering iron)
as per EN IEC 60068-2-20

Mechanical lifetime
≥1 million cycles of operations

Electrical characteristics

Illumination
Single-Chip or Multi-Chip LED, green, orange, red, yellow, white and blue

Operation Voltage	12 VDC	24 VDC
Current consumption	40 mA	20 mA

Contact resistance
Starting value (initial) ≤100 mΩ, as per DIN IEC 60512-2

Isolation resistance
≥1 G Ω between all terminals at 100 VDC, as per DIN IEC 60512-2

Electrical life
as per EN IEC 60512-5

5 million	cycles of operation	24 VAC, 50 mA at 480 Ω
5 million	cycles of operation	24 VAC, 100 mA at 240 Ω
2 million	cycles of operation	42 VAC, 50 mA at 840 Ω
2 million	cycles of operation	42 VAC, 100 mA at 420 Ω
300 000	cycles of operation	42 VAC, 100 mA at cosϕ 0.4
250 000	cycles of operation	42 VAC, 200 mA at cosϕ 0.395
1 million	cycles of operation	12 VDC, 250 mA at 48 Ω
1 million	cycles of operation	24 VDC, 50 mA at 480 Ω
1 million	cycles of operation	24 VDC, 100 mA at 240 Ω
5 million	cycles of operation	42 VDC, 25 mA at 1680 Ω
1.5 million	cycles of operation	42 VDC, 50 mA at 840 Ω
100 000	cycles of operation	42 VDC, 100 mA at 420 Ω
500 000	cycles of operation	24 VDC, 200 mA at L/R=30 ms
300 000	cycles of operation	42 VDC, 100 mA at L/R=30 ms
100 000	cycles of operation	42 VDC, 200 mA at L/R=30 ms

Switch rating

Voltage	50 mVAC/DC ... 42 VAC/DC
Current	10 uA ... 100 mA
Power	max. 2 W

Electric strength
500 VAC, 50 Hz, 1 min. as per DIN IEC 60512-2

Environmental conditions

Storage temperature
–40 °C ... +85 °C

Operating temperature
–25 °C ... +70 °C

Protection degree
For IP67 back protection, cable version only, use blind plug Typ-Nr. 84-900

Shock resistance
(semi-sinusoidal)
max. 100 m/s², pulse width 11 ms, 3-axis, as per EN IEC 60068-2-27

Vibration resistance
(sinusoidal)
max. 50 m/s² at 10 Hz ... 500 Hz, 10 cycles, 3-axis, as per EN IEC 60068-2-6

Actuator

Material

Lens
Polycarbonate (PC), as per UL 94 V2 or Aluminium anodised

Actuator housing
Polyetherimid (PEI), as per UL 94 V0 or Aluminium anodised

Mechanical characteristics

Mounting hole
22.5 mm dia. and 30.5 mm dia.

Tightening torque
Fixing nut max. 80 Ncm

Actuating force
4.0 N ±0.2 N (measured at the lens)

Actuating travel
Total switching travel 1.2 mm

Mechanical lifetime
≥1 million cycles of operations

Electrical characteristics

Electrostatic breakdown value
Plastic case ≤15 kV
Aluminium case ≤ 5 kV
as per IEC 61000-4-2, mounted in plastic front panel

Environmental conditions

Storage temperature
–40 °C ... +85 °C

Operating temperature
–25 °C ... +70 °C

Front protection
IP67, IP65 and IP40, as per EN IEC 60529

Climate resistance
Damp heat, cyclic
96 hours, +25 °C / 97%, +55 °C / 93% relative humidity, as per EN IEC 60068-2-30

Damp heat, state
56 days, +40 °C / 93% relative humidity, as per EN IEC 60068-2-78

Rapid change of temperature
100 cycles, –40 °C ... +80 °C, as per EN IEC 60068-2-14

84 Complete Indicator, Complete Pushbutton

Flush, plug-in terminals, Flat ribbon, PCB

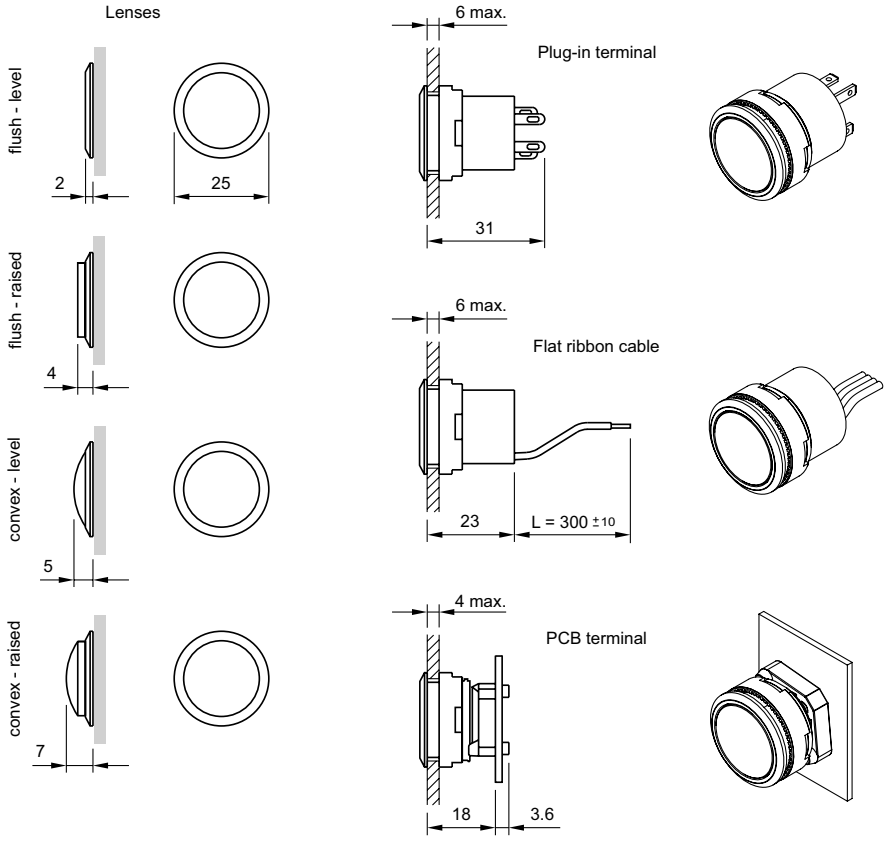

84 Emergency-stop switch

ISO 13850, Illuminated, Non-illuminated, Plug-in, Flat ribbon

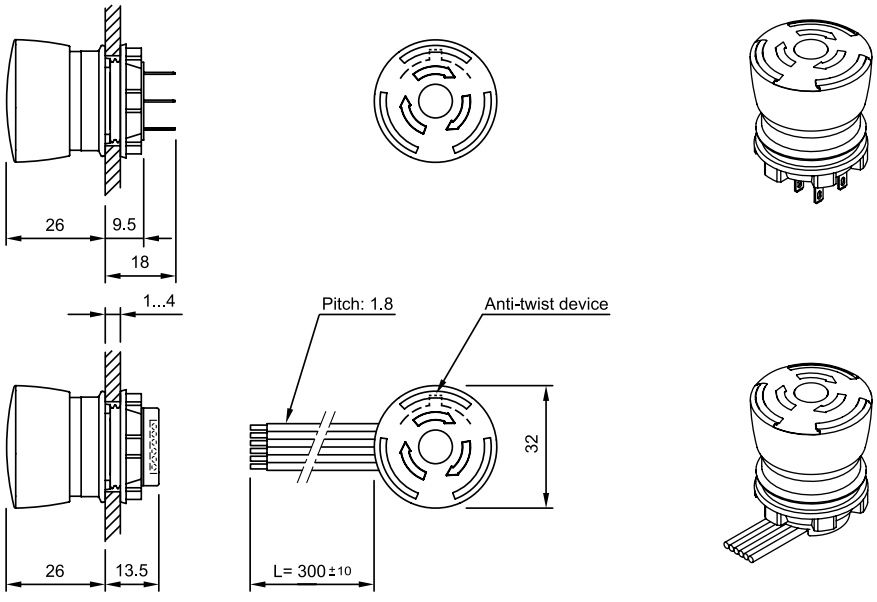

84 Cut-outs

Indicator, Pushbutton

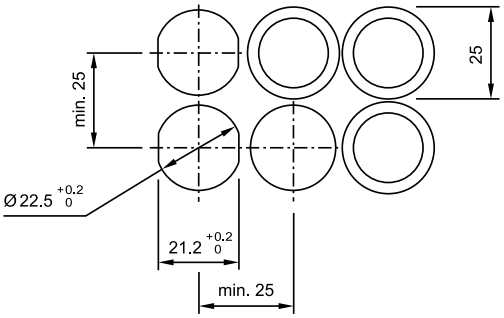

84 Cut-outs, E-Stop

ISO 13850, illuminated, Non-Illuminated, Plug-in, Ribbon Cable

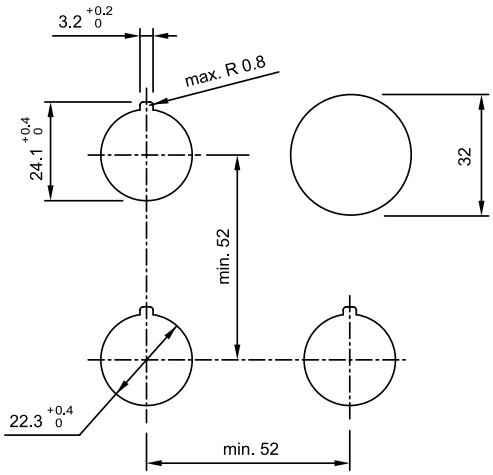

84 PCB-Layout, Indicator

Single-LED

Drilling plan (Elementside)
A Fixing holes for mounting flange (92-960.0)
B Holes for LED
C Holes for centering pins

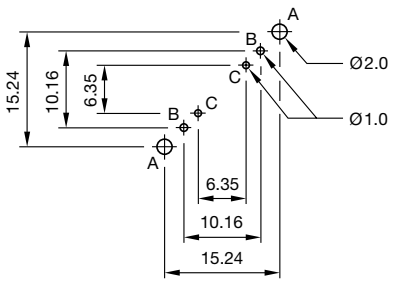

Bi-colour-LED

Drilling plan (Elementside)
A Fixing holes for mounting flange (92-960.0)
B Holes for Bi-colour LED: BA1 (green) +
BA2 (yellow or red) = Anodes, BC = Cathode
C Holes for centering pins

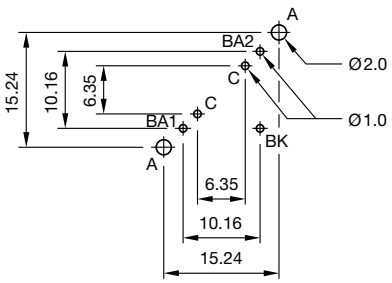

Hyper mini SMD-LED

Drilling plan (Elementside)
A Fixing holes for mounting flange (84-960.0)

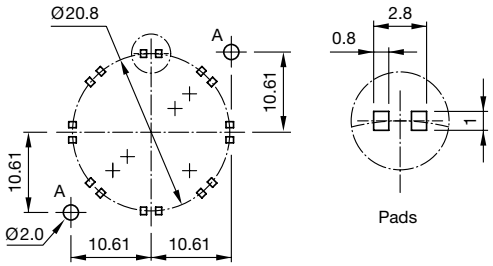

84 PCB-Layout, Pushbutton actuators

Single-LED

Drilling plan (Elementside)
A Fixing holes for mounting flange (92-960.0)
B Holes for LED
C Holes for contact pins
Pad max. Ø 2.5 mm
Through-connection recommended

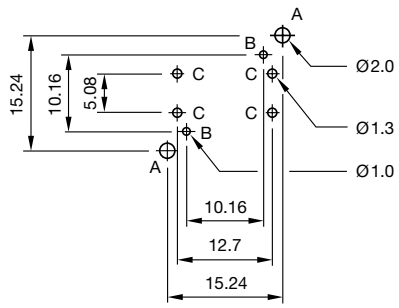

Bi-colour-LED

Drilling plan (Elementside)
A Fixing holes for mounting flange (92-960.0)
B Holes for Bi-colour LED: BA1 (green) +
BA2 (yellow or red) = Anodes, BK = Cathode
C Holes for contact pins
Pad max. Ø 2.5 mm
Through-connection recommended

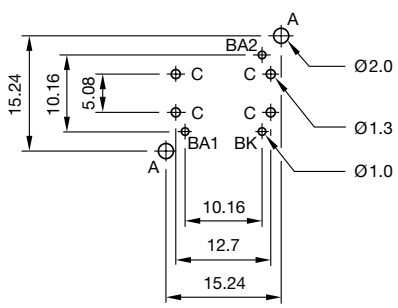

Hyper mini SMD-LED

Drilling plan (Elementside)
A Fixing holes for mounting flange (84-960.0)

