Mini free-standing Beacons / Permanent Light 220

# Permanent Beacon BM 12-230VAC/DC YE



**Part No.: 220.300.00**

| MECHANICAL DATA | |
|---|---|
| Height | 79 mm |
| Diameter | 75 mm |
| Materials | PA-GF<br>PC<br>PC/ABS |
| Dome colour | Yellow |
| Housing colour | Black |
| Protection category | IP65 |
| Connection | Spring-type terminal |
| cross-sectional area maximum | 2,50mm² / 14AWG |
| Cable entry | Through hole |
| Cable entry maximum | d = 10 mm |
| Type of fixing | Base mounting |
| Working temperature minimum | -20°C |
| Working temperature maximum | +50°C |
| Weight with packaging | 122 g |
| Product weight | 122 g |

| ELECTRICAL DATA | |
|---|---|
| Operating voltage | 12-230V |
| Operating voltage type | AC/DC |
| Protection class | Protection class 2 |
| Pollution degree | 3 |
| Overvoltage category | II |
| Isolation voltage | Ui = 250V; Uimp = 2.500V |

| OPTICAL DATA | |
|---|---|
| Light colour | Yellow |
| Service life optical | depends on bulb |

| APPROVAL DATA | |
|---|---|
| Conforms with CE | Yes |
| WEEE | Yes |
| Conforms with ATEX-directive | No |
| Conforms with CCC | Yes |
| Conforms with UL | cULus |
| UL Type Rating | Type 12 |
| Conforms with FCC | No |
| Conforms with IC | No |
| EAC certificate available | Yes |

! For additional installation and mounting information, refer to the appropriate user guide at www.werma.com. This printed copy is for information only and is subject to alteration.

Mini free-standing Beacons / Permanent Light 220

# Permanent Beacon BM 12-230VAC/DC YE

| | |
|---|---|
| Conforms with AS-I | No |
| ICAO Certification | No |
| Conforms with DNV | No |
| Conforms with RoHS CN | No |
| Conforms with VdS | No |

**DRAWING**

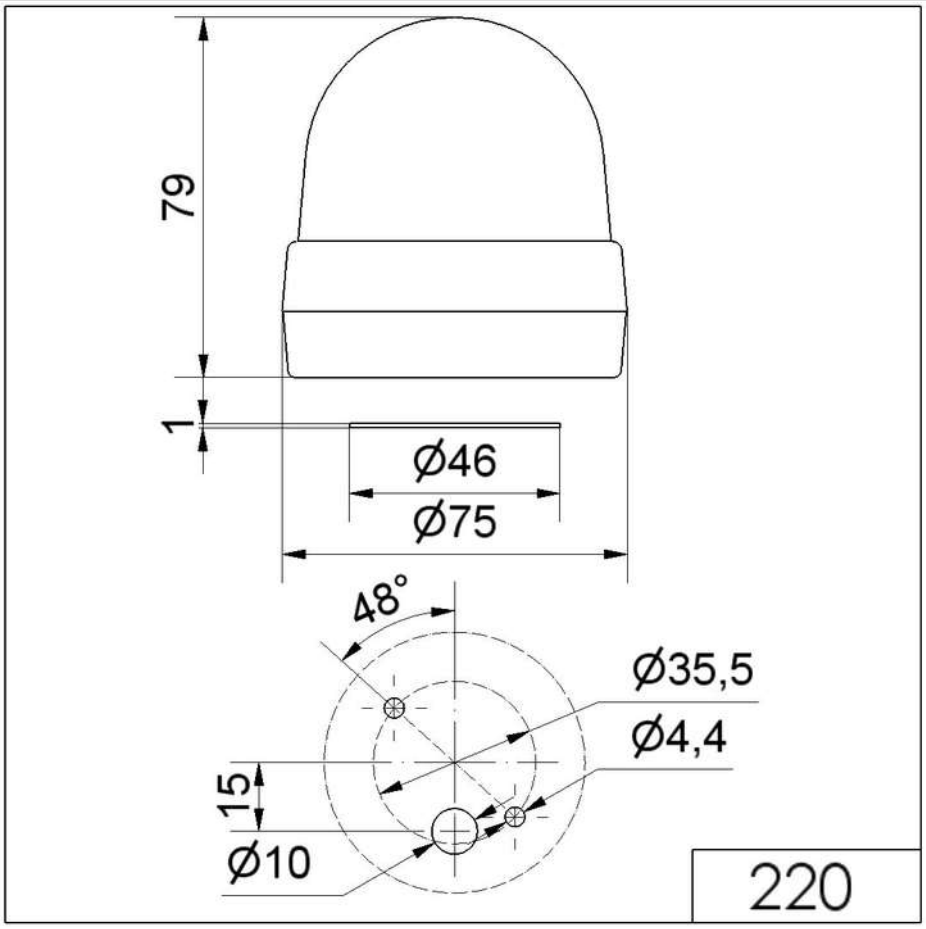


! For additional installation and mounting information, refer to the appropriate user guide at www.werma.com. This printed copy is for information only and is subject to alteration.