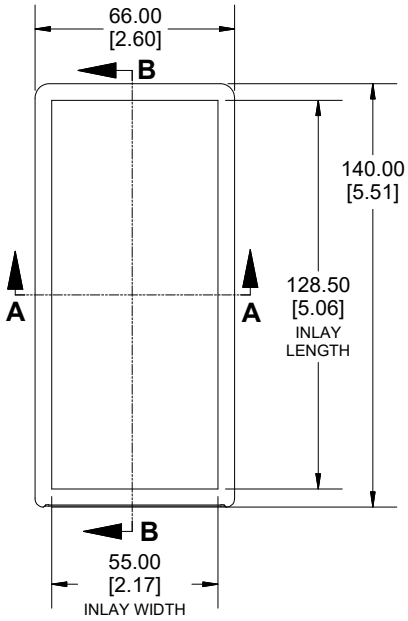

TOP VIEW

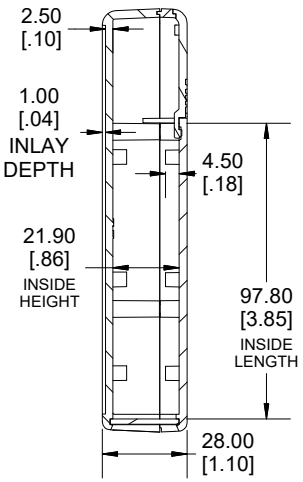

SECTION B-B
SIDE VIEW

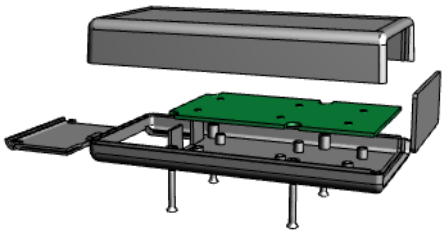

Enclosures can be Factory Modified (Milling, Drilling, Printing etc.)
Contact Factory (modshop@hammfg.com) for quotes
Solid models of this enclosure available in .stp or .x_t
(Part number and text placement/orientation on our products are subject to change, we do not recommend using them as a locating reference for modification purposes)

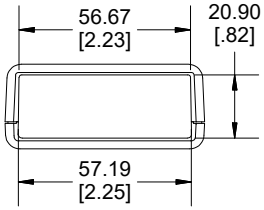

END VIEW

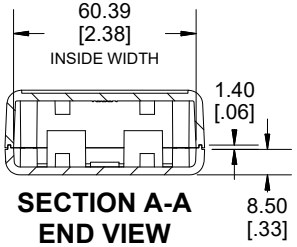

SECTION A-A
END VIEW

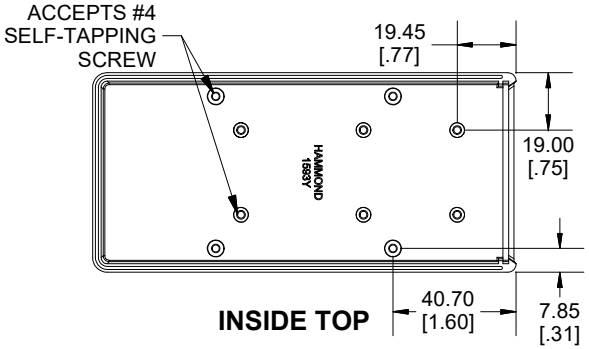

INSIDE TOP

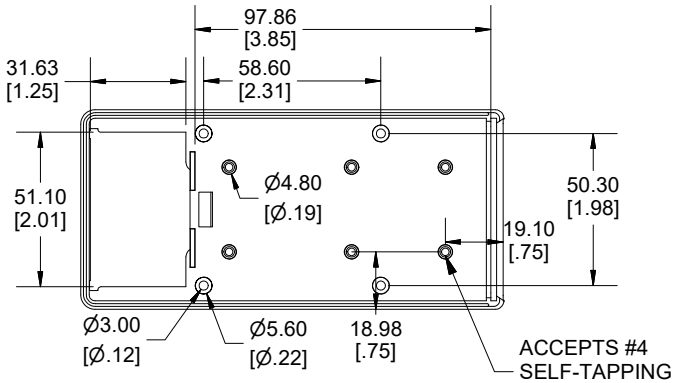

INSIDE BOTTOM

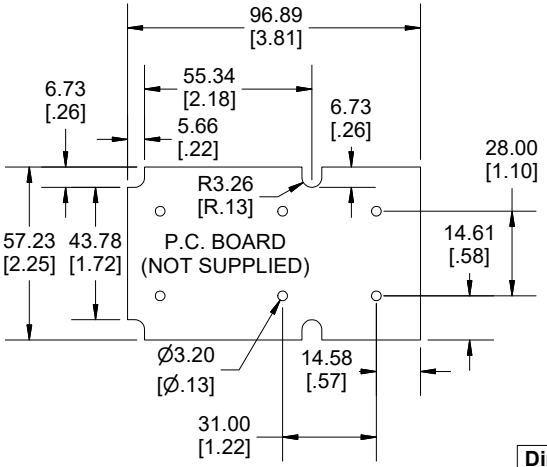

NOTE		
Enclosure molded from GP ABS (UL94-HB) plastic. Purchased assembly includes top and bottom cover, 1 plastic flat panel for front, battery door and 4 cover screws.		
Recommended Cover Screw Torque - 57lbf-in (40cN-m)		
1593		
1593Y Regular Enclosure		
Black Enclosure		1593YBK
Grey Enclosure		1593YGY
Translucent Blue Enclosure		1593YTBU
ACCESSORIES		
Cover Screws #4 X 3/4" Self-Tapping (100 Pkg)		1593QS100 (Silver)
		1593QS100BK (Black)
P.C. Board Screws #4 X 1/4" Self-Tapping		1593ATS50 (Pkg 50)
		1593ATS100 (Pkg 100)
Nylon Belt Clip		1599CLIP (Black)
		1599CLIPGY (Grey)
1-AAA Battery Holder (Single)		BH1AAAW
2-AAA Battery Holder (Single)		BH2AAAW
2-AA Battery Holder (Single)		BH2AAW
1-9V Battery Holder (Single)		BS61
1593Y STD FLAT PANEL (SINGLE PANEL)	Black	1593PLBK-BULK
	Grey	1593PLGY-BULK
	Translucent Blue	1593PLTBU-BULK
	Infrared	1593PIR10
	Aluminum	1593PAL10
1593Y STD CONTOURED PANEL (SINGLE PANEL)	Black	1593KCLBK-BULK
	Grey	1593KCLGY-BULK
	Translucent Blue	1593KCLTBU-BULK

Dimensions:
mm
[inches]

HAMMOND MANUFACTURING ®

1593Y

www.hammondmfg.com

REV: 27.09.2019