Product datasheet

Specifications



photo-electric sensor - XUK - receiver - Sn 30m - 12..24VDC - M12

XUK2APANM12R

Discontinued on: 01 November 2020

Discontinued

XUK2APANM12R has not been replaced. Please contact your customer care centre for more information.

Main

Range of product	Telemecanique Photoelectric sensors XU
Series name	General purpose single mode
Electronic sensor type	Photo-electric sensor receiver
Sensor name	XUK
Sensor design	Compact 50 x 50
Detection system	Thru beam
Material	Plastic
Type of output signal	Discrete
Supply circuit type	DC
Wiring technique	3-wire
Discrete output type	PNP
Discrete output function	1 NO
Electrical connection	1 male connector M12, 4 pins
Product specific application	-
Emission	Infrared thru beam
[Sn] nominal sensing distance	30 m thru beam need a transmitter XUK2AKSNM12T

Complementary

Enclosure material	PBT
Lens material	PMMA
Maximum sensing distance	45 m thru beam
Output type	Solid state
Add on output	Without
Status LED	1 LED (yellow) for output state
[Us] rated supply voltage	12...24 V DC with reverse polarity protection
Supply voltage limits	10…36 V DC
Switching capacity in mA	<= 100 mA (overload and short-circuit protection)

Disclaimer: This documentation is not intended as a substitute for and is not to be used for determining suitability or reliability of these products for specific user applications

Switching frequency	<= 250 Hz
Maximum voltage drop	<1.5 V (closed state)
Current consumption	<= 35 mA no-load
Maximum delay first up	15 ms
Maximum delay response	2 ms
Maximum delay recovery	2 ms
Setting-up	Without sensitivity adjustment
Depth	50 mm
Height	50 mm
Width	18 mm
Net weight	0.075 kg

Environment

Product certifications	UL CE CSA
Ambient air temperature for operation	-25…55 °C
Ambient air temperature for storage	-40…70 °C
Vibration resistance	7 gn, amplitude = +/- 1.5 mm (f = 10…55 Hz) conforming to IEC 60068-2-6
Shock resistance	30 gn (duration = 11 ms) conforming to IEC 60068-2-27
IP degree of protection	IP65 double insulation conforming to IEC 60529

Packing Units

Unit Type of Package 1	PCE
Number of Units in Package 1	1
Package 1 Weight	59.0 g
Package 1 Height	4.2 cm
Package 1 width	9.7 cm
Package 1 Length	6.7 cm
Unit Type of Package 2	S02
Number of Units in Package 2	44
Package 2 Weight	3.09 kg
Package 2 Height	15 cm
Package 2 width	30 cm
Package 2 Length	40 cm

Offer Sustainability

Sustainable offer status	Green Premium product
REACh Regulation	REACh Declaration
EU RoHS Directive	Pro-active compliance (Product out of EU RoHS legal scope) EU RoHS Declaration
Mercury free	Yes
RoHS exemption information	Yes
Environmental Disclosure	Product Environmental Profile

Circularity Profile	End of Life Information

Contractual warranty

Warranty	18 months

Product datasheet XUK2APANM12R

Dimensions Drawings

Dimensions

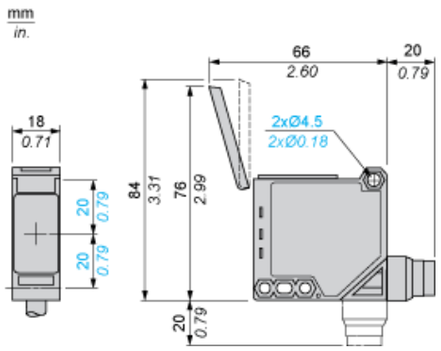

Mounting and Clearance

Possible Orientation of Elbowed Connector

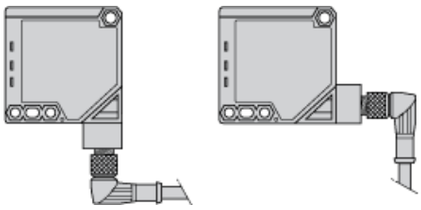

Wiring Schemes

M12 Connector

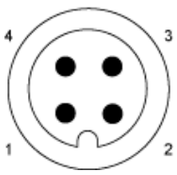

1 : (+)
3 : (-)
4 : OUT/Output

PNP Outputs

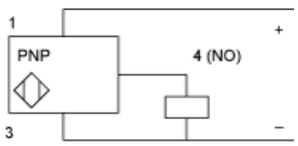

Product datasheet XUK2APANM12R

Performance Curves

Detection Curves

