Your Expert Partner for **Human Machine Interfaces**

Blind plug

Distribution by
Rs-online

704.960.4

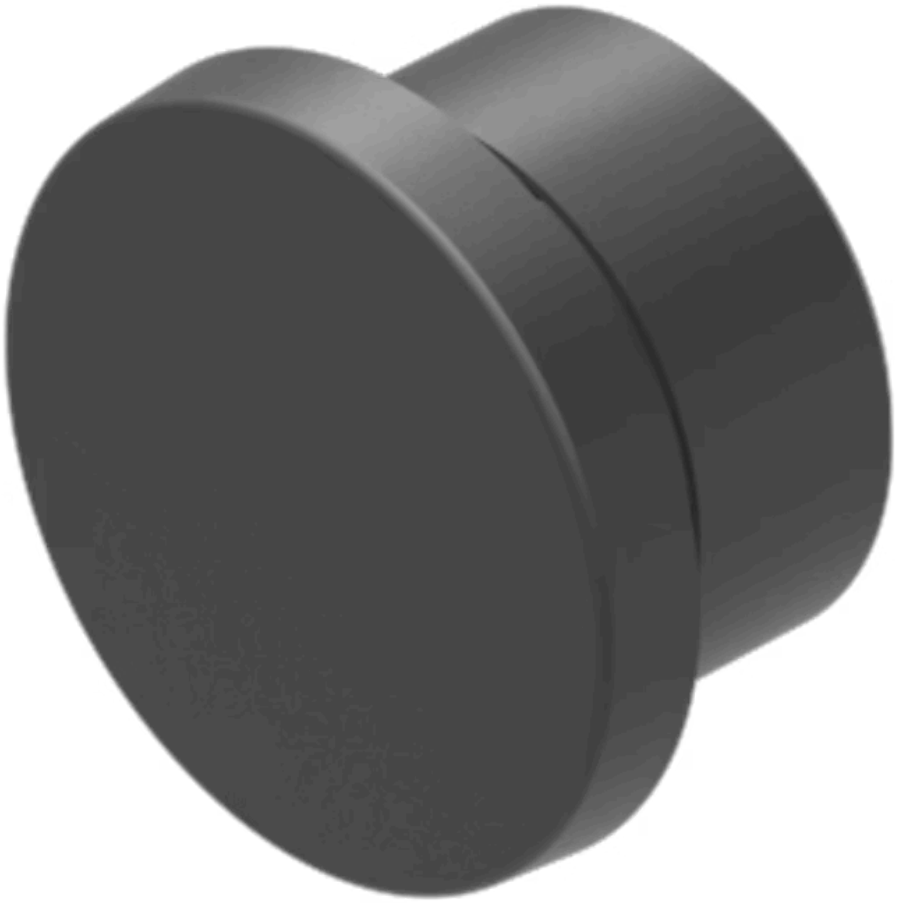

https://rs-online.eao.com/component/704.960.4...

Your product:



704.960.4
Blind plug

FRONT

Colour: Black

MOUNTING

Mounting cut-out: Ø 22.5 mm

MECHANICAL CHARACTERISTICS

Weight: 0.007 kg

OTHER

Short Description: Blind plug, Ø 28 mm, Ø 22.5 mm, Plastic, Black

Titel Accessory: Blind plug

Dimension: Ø 28 mm

Material: Plastic

Hints: Please note that bigger minimum distances are necessary

Dimension drawings:

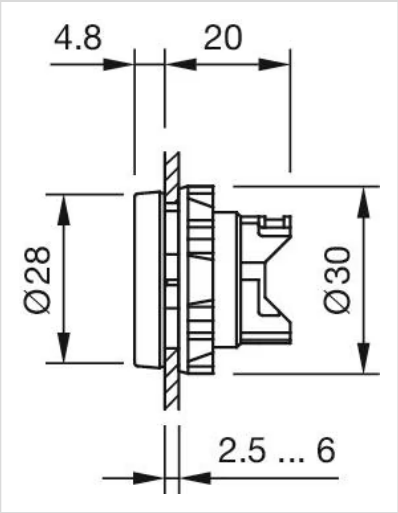

for Part No. 704.960.4