# E43008

## Clamp fitting for process sensors

MOUNTING ADAPTER G3/4/D22

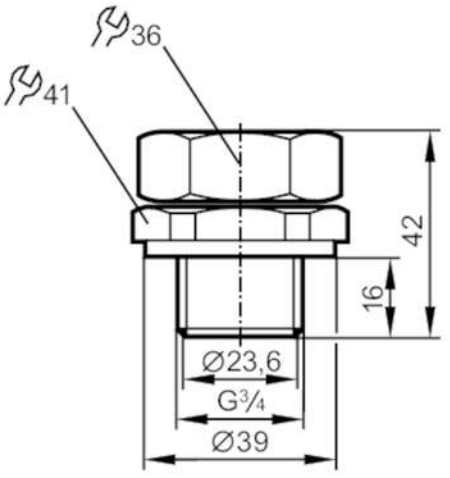


| | | |
|---|---|---|
| **Application** | | |
| Design | | for climatic tube LK, LI |
| Installation | | Clamp fitting |
| Pressure rating | [bar] | 0.5 |
| **Operating conditions** | | |
| Ambient temperature | [°C] | 0...80 |
| **Mechanical data** | | |
| Weight | [g] | 195.5 |
| Dimensions | [mm] | Ø 39 / L = 42 |
| Materials | | stainless steel; NBR; Tesnit; brass |
| Tightening torque | [Nm] | 6...8 |
| Sensor connection | | Ø 22 mm |
| Process connection | | threaded connection G 3/4 external thread |
| **Remarks** | | |
| Pack quantity | | 1 pcs. |