# TD2947

## Temperature transmitter with display

TD-150CFEC02-A-ZVG/US

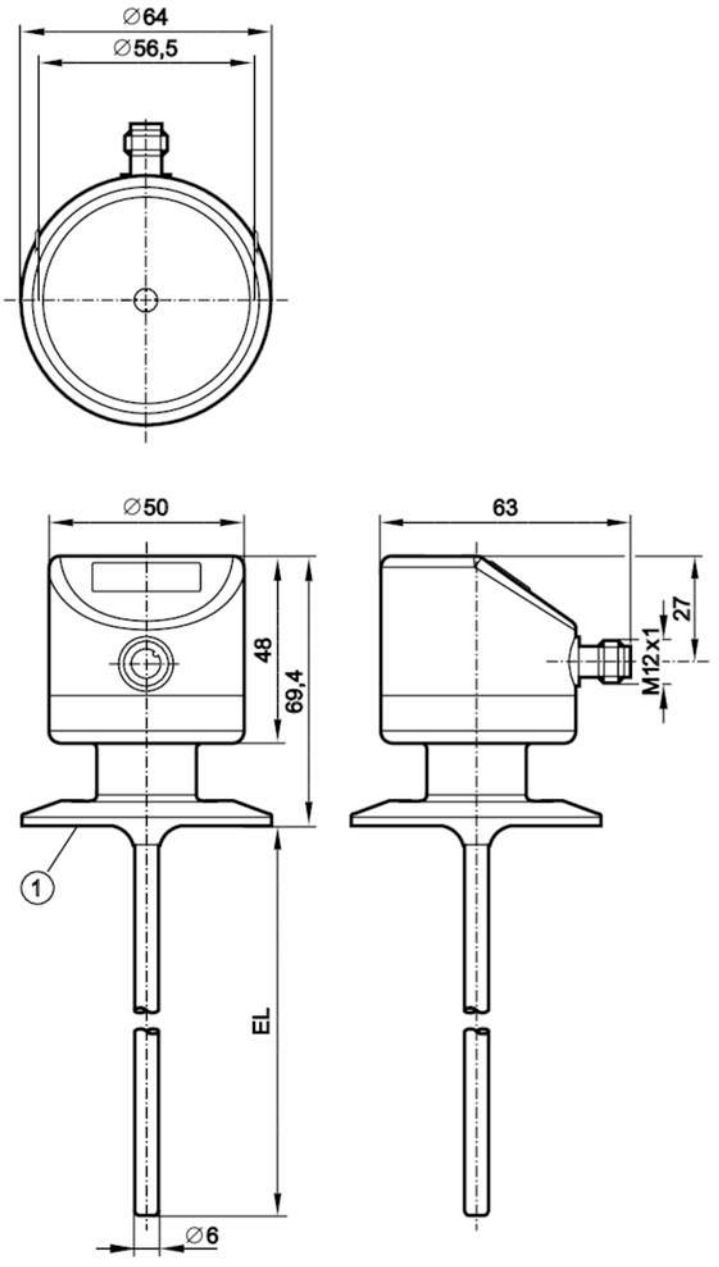


1 2" Clamp ISO 2852
EL = installation length

EC 1935/2004 EHEDG Certified FCM IO-Link

| Product characteristics | | | |
|---|---|---|---|
| Number of inputs and outputs | | Number of analogue outputs: 1 | |
| Measuring range | | -50...150 °C | -58...302 °F |
| Communication interface | | IO-Link | |
| Process connection | | Clamp DN50 (2") DIN 32676 (ISO 2852) | |
| Installation length EL | [mm] | 150 | |
| **Application** | | | |
| Measuring element | | 1 x Pt 1000; (to DIN EN 60751, class A) | |
| Media | | liquids and gases | |

# TD2947

## Temperature transmitter with display

TD-150CFEC02-A-ZVG/US

| | | | |
|---|---|---|---|
| Pressure rating | | 100 bar | 10 MPa |
| Vacuum resistance | | -1000 mbar | -0.1 MPa |
| **Electrical data** | | | |
| Operating voltage | [V] | 18...32 DC;  ("supply class 2" to cULus) | |
| Current consumption | [mA] | < 50 | |
| Protection class | | III | |
| Reverse polarity protection | | yes | |
| Power-on delay time | [s] | 2 | |
| **Inputs / outputs** | | | |
| Number of inputs and outputs | | Number of analogue outputs: 1 | |
| **Outputs** | | | |
| Total number of outputs | | 1 | |
| Output signal | | analogue signal; IO-Link;  (configurable) | |
| Number of analogue outputs | | 1 | |
| Analogue current output | [mA] | 4...20 | |
| Max. load | [Ω] | 300 | |
| Short-circuit protection | | yes | |
| Overload protection | | yes | |
| **Measuring/setting range** | | | |
| Probe length L | [mm] | 150 | |
| Measuring range | | -50...150 °C | -58...302 °F |
| Factory setting | | 0...100 °C | |
| Resolution | | | |
| Resolution of analogue output | [K] | 0.04 | |
| Resolution of display | [K] | 0.1 | |
| **Accuracy / deviations** | | | |
| Precision analogue output | [K] | ± 0,3 + (± 0,1 % MS) | |
| Temperature coefficient | [% of the span / 10 K] | 0,1;  (in case of deviation from the reference condition 25 °C) | |
| **Response times** | | | |
| Dynamic response T05 / T09 | [s] | 1 / 3 | |
| **Interfaces** | | | |
| Communication interface | | IO-Link | |
| Transmission type | | COM2 (38,4 kBaud) | |
| IO-Link revision | | 1.1 | |
| **Operating conditions** | | | |
| Ambient temperature | [°C] | -25...80 | |
| Storage temperature | [°C] | -40...100 | |
| Protection | | IP 67; IP 68; IP 69K | |
| **Tests / approvals** | | | |
| EMC | | DIN EN 61000-6-2 | |
| | | DIN EN 61000-6-3 | |
| Shock resistance | | DIN IEC 68-2-27 | 50 g (11 ms) |

# TD2947

## Temperature transmitter with display

TD-150CFEC02-A-ZVG/US

| | | | |
|---|---|---|---|
| Vibration resistance | | DIN IEC 68-2-6 | 10 g (10...2000 Hz) |
| MTTF | [years] | 405 | |
| Note on approval | | factory certificate available as download at www.factory-certificate.ifm | |
| UL approval | | UL Approval no. | K001 |

### Mechanical data

| | | | |
|---|---|---|---|
| Weight | [g] | 481.5 | |
| Materials | | stainless steel (316L/1.4404); PEI; FKM | |
| Materials (wetted parts) | | stainless steel (316L/1.4404) electropolished | |
| Process connection | | Clamp DN50 (2") DIN 32676 (ISO 2852) | |
| Surface characteristics Ra/Rz of the wetted parts | | Ra: < 0.8 | |
| Probe diameter | [mm] | 6 | |
| Installation length EL | [mm] | 150 | |

### Displays / operating elements

| | | |
|---|---|---|
| Display | | 7-segment LED display, 4-digit |
| | | display unit / status, °C / °F |

### Remarks

| | |
|---|---|
| Remarks | MS = set measuring span |
| | The values for accuracy apply to flowing water. |
| Pack quantity | 1 pcs. |

### Electrical connection

Connector: 1 x M12; coding: A




Connection

