KSR Series

Sub-Miniature Tactile Switch for SMT 6.0 x 3.8 mm, with 2.5 mm Height Soft Actuator



Description

The KSR series subminiature tact switch for SMT has 4 actuation forces and is an N.O. (normally open) and N.C. (normally closed) switch. With detect type available, The KSR series is ideal for industrial, medical and automotive applications that need emergency stop functionality should accidents occur.

Features & Benefits

- 4 actuation forces
- G terminations
- N.O. and N.C.
- Detect type available
- Rubber actuator
- RoHS compliant and compatible

Applications

- Transportation
- Medical equipment
- Industrial electronics
- Smart meters

Specifications

Function	Momentary action
Contact Arrangement	Normally Open (standard versions) Normally Closed (NC versions)
Terminals	Gullwing type for SMT
Overload	20 Newtons

Electrical Characteristics

	Silver	**Gold**
Maximum Power	1 VA	0.2 VA
Min. / Max. Voltage	20 mV - 32VDC	
Min. / Max. Current	1 - 50 mA	1 - 10 mA
Contact Resistance	≤ 100 mΩ	
Insulation Resistance	(100 V): 1G Ω (between terminals)	
Bounce Time	1 ms max.	

Environmental Characteristics

	Silver	**Gold**
Operating Temperature	-40˚C to 85˚C	-40˚C to 125˚C
Storage Temperature	-55˚C to 85˚C	-55˚C to 125˚C

Process

Soldering	Lead free reflow soldering process in accordance with IEC 61760-1
Packaging	Switches are delivered on continuous tape, in reels of 2,500 pieces

Dimensions (mm)

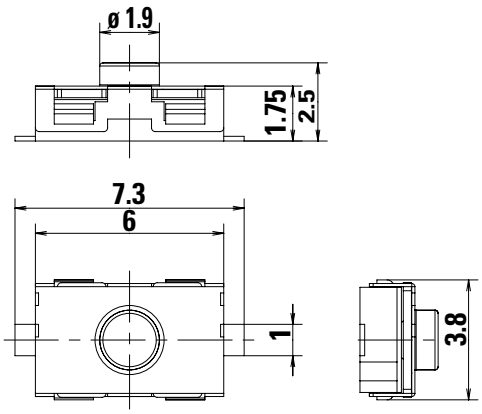

Recommended PCB layout

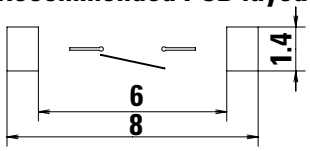

© 2025 Littelfuse, Inc.
Specifications are subject to change without notice.
Revised: VL 01/30/25

KSR Series
Sub-Miniature Tactile Switch for SMT 6.0 x 3.8 mm, with 2.5 mm Height Soft Actuator

Mechanical Characteristics

Part #	Operating Force Newtons (grams)	Operating Life (operations)	Travel (mm)
KSR211G LFS / KSR213G LFG	1.5 < 1.85 (185) < 2.2	100,000	0.25 ± 0.15
KSR221G LFS / KSR223G LFG	1.9 < 2.25 (225) < 2.6		0.3 ± 0.15
KSR231G LFS / KSR233G LFG	2.25 < 3.00 (300)< 3.75		0.35 ± 0.15
KSR251G LFS / KSR253G LFG	3.4 < 4.50 (450) < 5.6		0.5 ± 0.15
KSR221G NC LFS	1.5 < 2.25 (225) < 3	30,000	0.3 ± 0.15
KSR223G NC LFS	1.5 < 2 (200) < 2.5		

Note: Specifications listed above are for switches with standard options. For information on specific and custom switches, consult Customer Service Center. Detect switch versions are available. Please see Detect chapter KSR2D/M series.

© 2025 Littelfuse, Inc.
Specifications are subject to change without notice.
Revised: VL 01/30/25

KSR Series

Sub-Miniature Tactile Switch for SMT 6.0 x 3.8 mm, with 2.5 mm Height Soft Actuator

Tape & Reel

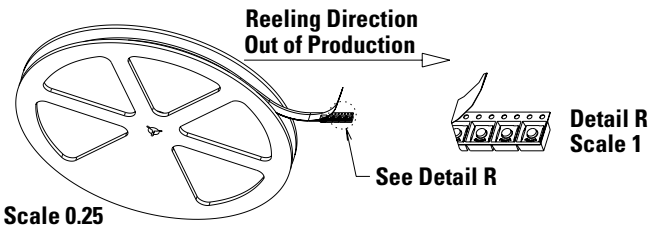

Packaging Details

Type	Tape & reel
Number of Parts in Packaging	2,500
Other Information	Tape and reel per EIA 481
Transport Conditions	According to specification NF H00-060

Tape & Reel

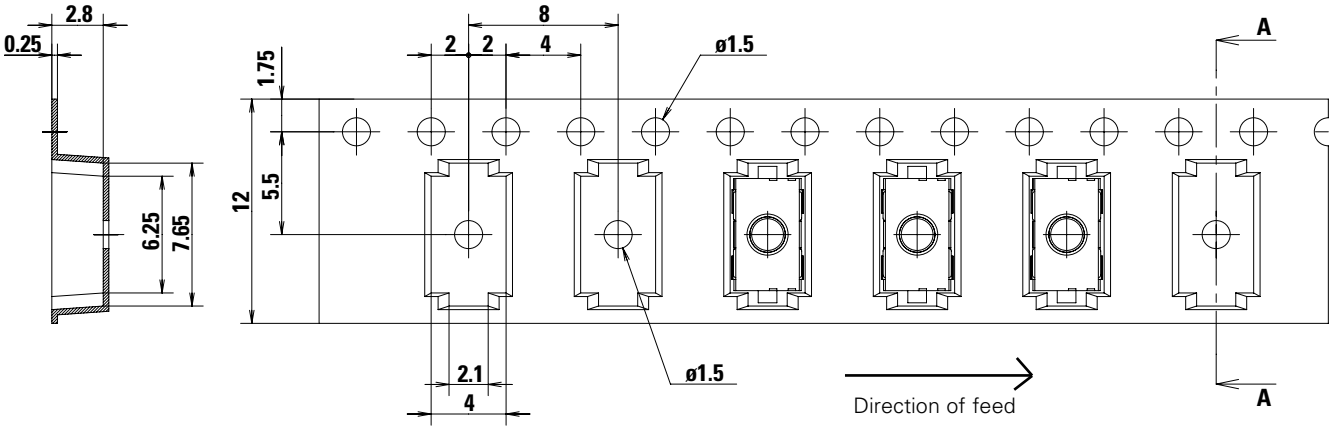

Ordering Number

Our easy build-a-switch concept allows you to mix and match options to create the switch you need. To order, select desired option from each category and place it in the appropriate box. For any part number different from those listed above, please consult your local representative.

KSR - 2 - x - x - G - x - x

Actuator
2: Soft actuator

Operating force
1: 1.8N (180 grams)
2: 2.0N (200 grams)
3: 3.0N (300 grams)
5: 4.5N (450 grams)

Contact Material
1: Silver
3: Gold

Termination
G: Gull wing

Switch Function
(NONE): Normally Open
NC: Normally closed[1]

LFS: RoHS compliant and compatible, Silver plated
LFG: RoHS compliant and compatible, Gold plated

Note:
1. Available on KSR22xG only

Liability Limitation

This datasheet does not provide enough information for applications that require a certain level of quality or safety such as automotive, medical systems, or safety equipement. Please contact customer service for the contractual specification package.

Disclaimer Notice - Information furnished is believed to be accurate and reliable. However, users should independently evaluate the suitability of and test each product selected for their own applications. Littelfuse products are not designed for, and may not be used in, all applications. Read complete Disclaimer Notice at http://www.littelfuse.com/disclaimer-electronics.

© 2025 Littelfuse, Inc.
Specifications are subject to change without notice.
Revised: VL 01/30/25

KSR Long Life

200,000 cycles - Gold and Silver Series Subminiature Tactile Switch for SMT

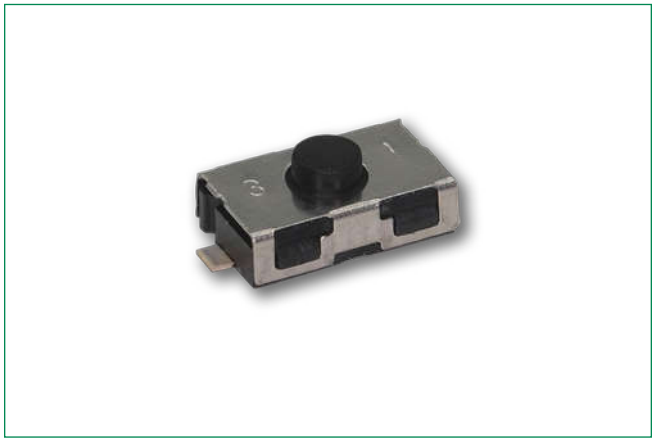

Description

The KSR series subminiature tact switch for SMT has 4 actuation forces and is an N.O. (normally open) and N.C. (normally closed) switch. With detect type available, KSR is ideal for industrial, medical and automotive applications that need emergency stop functionality should accidents occur.

Features & Benefits

- 4 actuation forces
- G terminations
- N.O.
- Detect type available
- Rubber actuator
- IP50 sealed
- RoHS compliant and compatible

Applications

- Automotive
- Medical equipment
- Industrial electronics

Specifications

Function	Momentary action
Contact Arrangement	Normally Open
Terminals	Gullwing type for SMT
Overload	20 Newtons
Packaging	Switches are delivered on continuous tape, in reels of 2,500 pieces

Electrical Characteristics

	Silver	**Gold**
Maximum Power	1 VA	0.2 VA
Min. / Max. Voltage	20 m VDC - 32VDC	
Min. / Max. Current	1 - 50 mA	1 - 10 mA
Contact Resistance	≤ 100 mΩ	
Insulation Resistance	(100 V): 1G Ω (between terminals)	
Bounce Time	1 ms max.	

Environmental Characteristics

	Silver	**Gold**
Operating Temperature	-40˚C to 85˚C	-40˚C to 125˚C
Storage Temperature	-55˚C to 85˚C	-55˚C to 125˚C

Note: Specifications listed above are for switches with standard options. For information on specific and custom switches, consult Customer Service Center.

Process

Soldering	Compatible lead free reflow soldering process

Mechanical Characteristics

Part #	**Operating Force (Fa) Newtons (grams)**	**Operating Life (operations)**	**Travel (mm)**
Silver Versions			
KSR212G LFS	1.5 < 1.85 (185) < 2.2	200,000	0.25 ± 0.15
KSR222G LFS	1.9 < 2.25 (225) < 2.6		0.3 ± 0.15
KSR232G LFS	2.25 < 3.00 (300)< 3.75		0.35 ± 0.15
KSR252G LFS	3.4 < 4.50 (450) < 5.6		0.5 ± 0.15
Gold Versions			
KSR214G LFG	1.5 < 1.85 (185) < 2.2	200,000	0.25 ± 0.15
KSR224G LFG	1.9 < 2.25 (225) < 2.6		0.3 ± 0.15
KSR234G LFG	2.25 < 3.00 (300)< 3.75		0.35 ± 0.15
KSR254G LFG	3.4 < 4.50 (450) < 5.6		0.5 ± 0.15

© 2024 Littelfuse, Inc.
Specifications are subject to change without notice.
Revised: CM.07/08/24

KSR Long Life

200,000 cycles - Gold and Silver Series Subminiature Tactile Switch for SMT

Ordering Number

Our easy build-a-switch concept allows you to mix and match options to create the switch you need. To order, select desired option from each category and place it in the appropriate box. For any part number different from those listed above, please consult your local representative.

KSR - 2 - x - x - G - xxx

Actuator
2: Soft actuator

Operating force
1: 1.8N (180 grams)
2: 2.0N (200 grams)
3: 3.0N (300 grams)
5: 4.5N (450 grams)

Contact Material
2: Silver
4: Gold

Termination
G: Gull wing

LFS: RoHS compliant and compatible, Silver plated
LFG: RoHS compliant and compatible, Gold plated

KSR

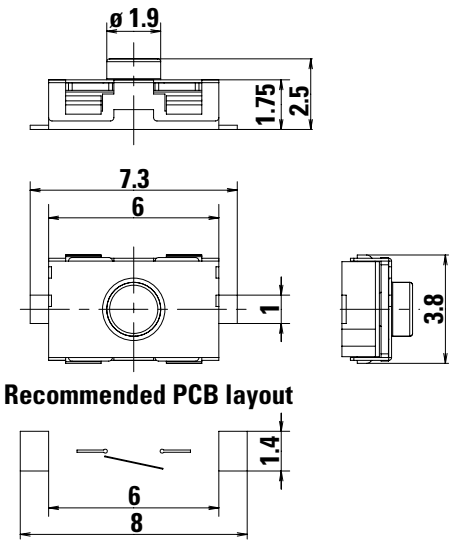

Tape & Reel

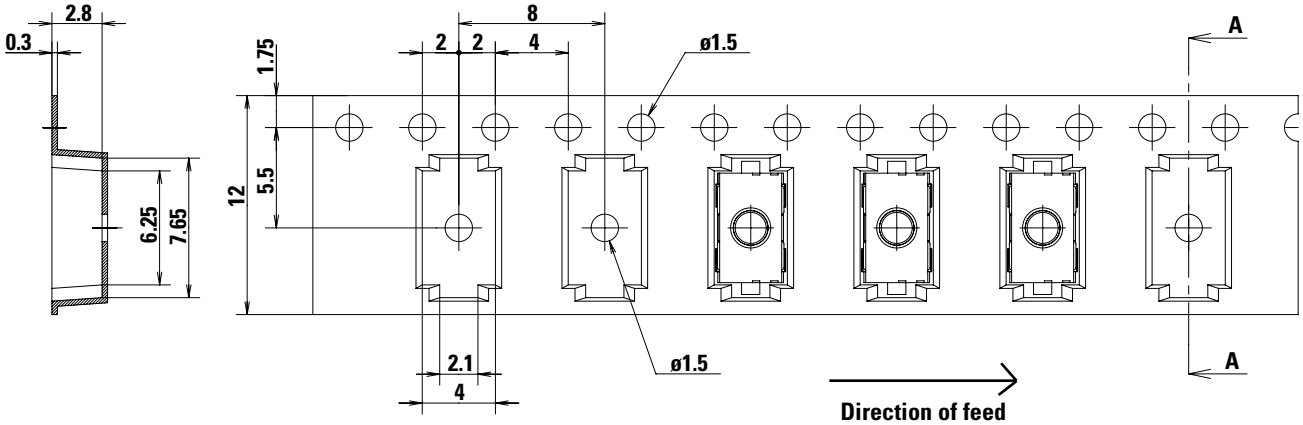

Disclaimer Notice - Information furnished is believed to be accurate and reliable. However, users should independently evaluate the suitability of and test each product selected for their own applications. Littelfuse products are not designed for, and may not be used in, all applications. Read complete Disclaimer Notice at http://www.littelfuse.com/disclaimer-electronics.

© 2024 Littelfuse, Inc.
Specifications are subject to change without notice.
Revised: CM.07/08/24