IKO

CAM FOLLOWERS

Standard Type Cam Followers With Cage/With Hexagon Hole



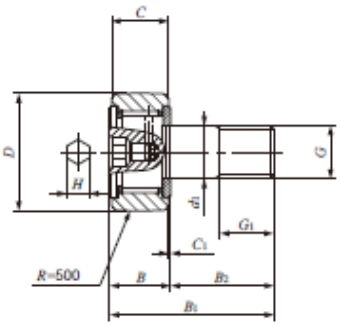

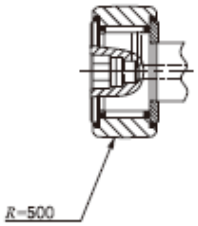

RS Part Number	IKO Part Number	Stud Diameter (mm)	Mass	D	C	d1	G	G1	B max
1251204	CF4BUUR	4	7.4	12	8	4	M4x0.7	6	9
1251205	CF5BUUR	5	10.3	13	9	5	M5x0.8	7.5	10
1251206	CF6BUUR	6	18.5	16	11	6	M6x1	8	12.2
1251207	CF8BUUR	8	28.5	19	11	8	M8x1.25	10	12.2
1251208	CF10BUUR	10	45	22	12	10	M10x1.25	12	13.2
1251209	CF10-1BUUR		60	26	12	10	M10x1.25	12	13.2

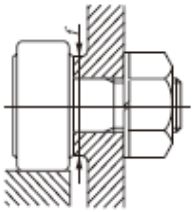

B1 max	B2	B3	C1	g1	g2	H	rs min	Mounting dimension ∫min (mm)	Basic dynamic load rating C (N)	Basic static load rating Co (N)	Maximum allowable static load (N)
20	11	-	0.5	-	-	2.5	0.3	8.3	2070	1590	834
23	13	-	0.5	-	-	3	0.3	9.3	2520	2140	1260
28.2	16	-	0.6	-	-	3	0.3	11	3660	3650	1950
32.2	20	-	0.6	-	-	4	0.3	13	4250	4740	4620
36.2	23	-	0.6	-	-	4	0.3	16	5430	6890	6890
36.2	23	-	0.6	-	-	4	0.3	16	5430	6890	6890