ifm electronic



Fluid sensors and diagnostic systems

Catalogue 2008/2009



www.ifm-electronic.com

fluid sensors and diagnostic systems

position sensors and object recognition

bus, identification and control systems

ifm electronic – close to you!

The easy way to find what you are looking for

Header

1. *Section*
2. *Heading*
3. *Environment*
4. *Product group name*
5. *Heading repeated*
6. *Illustration*

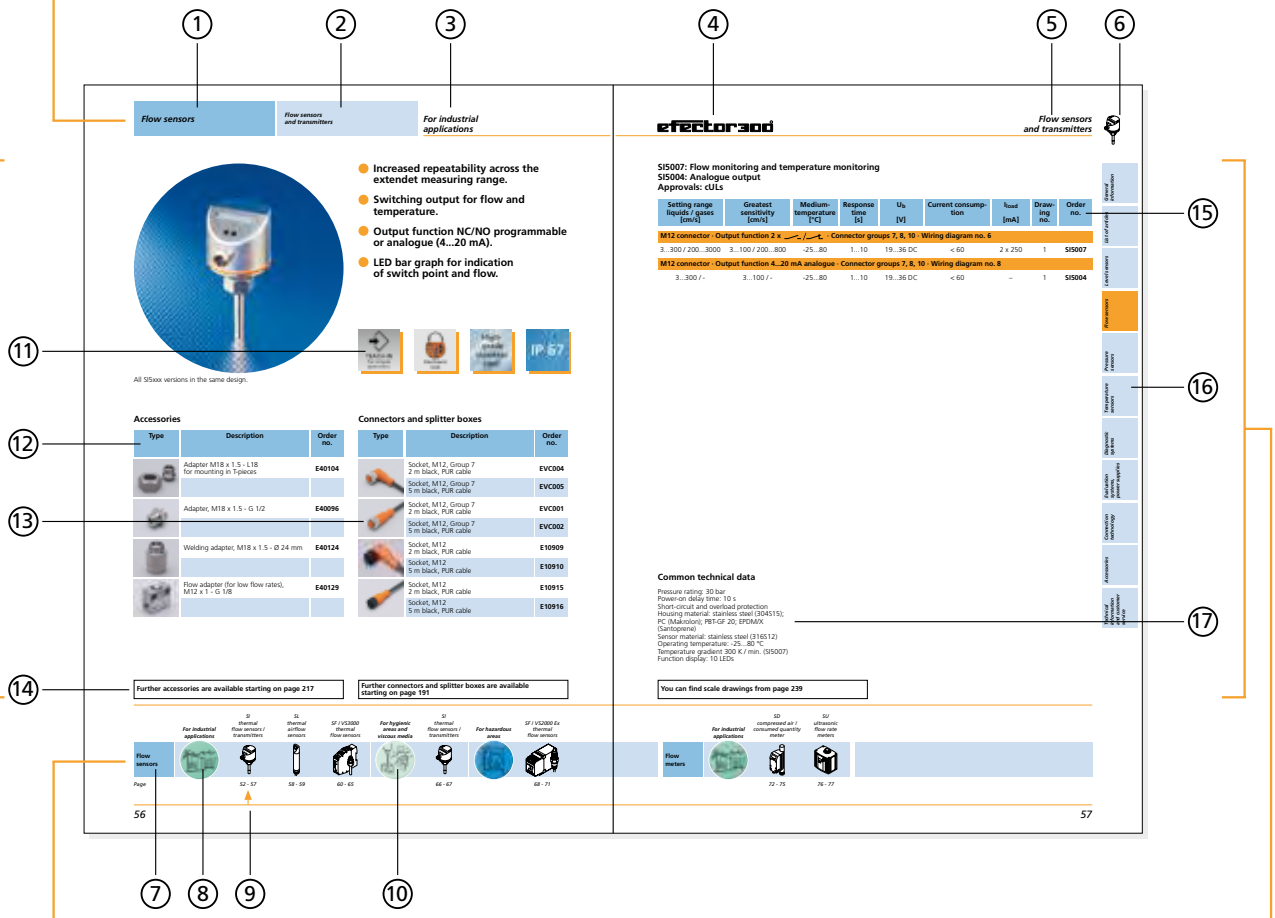

Navigation bar

7. *Current heading*
8. *Current environment*
9. *Arrow = You are here*
10. *Other environments*

Right

15. *Technical data*
16. *Current section*
17. *Common technical data*

Left

11. *Special features of the units*
12. *Recommended accessories*
13. *Recommended connectors*
14. *Notes for further details*

efector

ecomat

General information	Notes and explanations	5 - 7
List of articles	Order numbers in alphanumeric order	9 - 15
Level sensors	Continuous and point level measurement	17 - 35
Flow sensors	Flow sensors and transmitters, flow meters	37 - 77
Pressure sensors	Pressure sensors and transmitters	79 - 127
Temperature sensors	Temperature sensors and transmitters	129 - 153
Diagnostic systems	Systems for vibration diagnosis	155 - 171
Evaluation systems, power supplies	Amplifiers, transformer and switched-mode power supplies	173 - 189
Connection technology	Complete ifm product range	191 - 215
Accessories	Accessories fluid sensors and diagnostic systems	217 - 228
Technical information and customer service	Wiring diagrams Scale drawings Technical glossary ifm information and ordering service	232 - 234 236 - 271 272 - 281 282 - 291



General information

Notes and explanations

Environmental conditions, approvals and standards 6 - 7

For industrial applications



Industrial applications require robust and uncomplicated electronic units but with a high level of technology. ifm makes sensors and evaluation electronics in accordance with quality standards which are far above average.
The production materials employed are subjected to demanding tests and have been selected for a maximum long-term stability in universal applications. The result of this production philosophy is an optimum resistance and reliability of all products used in industrial applications.

For hygienic areas and viscous media



In all areas of process technology, especially in the food and pharmaceutical industries a hygienic design of the components used is required. Important features for sensors in contact with product are good cleanability and use of high quality materials. ifm sensors meet these requirements, which is evidenced by conformity with the EHEDG guidelines and approval in accordance with the sanitary 3A standard.
Due to the high viscosity of viscous media the sensors must be insensitive to product build-up and the affected measurement accuracy. For ifm sensors this is implemented in various ways, e.g. by electronic compensation or a sensor design specially adapted to the medium.

For hazardous areas



Sensors and evaluation amplifiers to 94/9/EC (ATEX):

Fluid sensors are available for hazardous areas (ATEX). The requirements of the applicable installation regulations must be strictly followed by the user. Intrinsically safe sensors are only allowed to be operated with suitable amplifiers holding an EC type test certificate. There are also special requirements for the sensor wiring which must also be strictly adhered to. This is the user's responsibility. Also note the EC type test certificate, operating instructions and the technical data sheet.

For oils and coolants



For fluid sensors ifm offers special cables and connectors for factory automation.
Halogen-free PUR cables with high resistance to alternate bending stress, PUR housing materials, gold-plated contacts and protection rating IP 68 guarantee long life in an oily and greasy environment. The international UL and CSA approval means these units are accepted anywhere in the world market.

For hygienic and wet areas



ifm offers special cables and connectors designed for the food and hygienic sector. High quality PVC cables and housing materials, coupling nuts of high-grade stainless steel (316S12) as well as gold-plated contacts are ideal for use in wet areas. The high protection ratings IP 68 and IP 69K withstand high-pressure steam cleaning. The sensors are chemically resistant to most common cleaning agents. The UL / CSA approval is a matter of course for these units.

Visit our website: www.ifm-electronic.com

CCC	CCC (China Compulsory Certification) is a compulsory Chinese certification for certain products put on the market in China. Which products are concerned is specified in a catalogue created by the Chinese authorities. Among others, proximity sensors with a voltage range of over 36 V fall under the duty of certification.
CE	With the CE marking the manufacturer documents that the units sold by him adhere to the European directives for specified electrical equipment.
EHEDG	The EHEDG (European Hygienic Equipment Design Group) prepares guidelines for Europe concerning the requirements for measuring systems in machines of the food and pharmaceutical industries. Units with the EHEDG marking have been tested and approved for the food and pharmaceutical industries in accordance with these guidelines.
Ex	The units of the categories 1 and 2 have been tested and approved by a notified European body (e.g. PTB, EXAM) for use in hazardous areas.
FDA	Food and Drug Administration. US-American supervisory authority for food and drugs. This authority grants approvals for products and materials used in the food and pharmaceutical industries.
German overspill standard WHG	Units with this marking have been tested and approved by a notified body as overspill protection for liquids that are harmful to ground water in accordance with the German overspill standard WHG.
UL / CSA or cULus / cЯUus	Units with this marking meet the requirements of UL (Underwriters Laboratories Inc.) and CSA (Canadian Standards Association). In many cases this approval is necessary to access the North American market. cULus is a combined approval and corresponds to the two individual approvals CSA and UL.



List of articles

Order numbers in alphanumeric order

Fluid sensors and diagnostic systems 10 - 15



Order no.	Approvals	Catalogue page
DL2003	CUL	183
DN0001	CUL	187
DN0012		187
DN0200		187
DN1020	CUL	189
DN1021	CUL	189
DN1022	CUL	189
DN2011	CUL	189
DN2012	CUL	189
DN2013	CUL	189
DN2014	CUL	189
DN2021		189
DN2032	CUL	189
DN2033	CUL	189
DN2034	CUL	189
DN2035	CUL	189
DN2036	CUL	189
DN2112		189
DN2114	CUL	189
DN2134	CUL	189
DT0001		187
DX2011		185
DX2012		185
E10013		200
E10017		221, 224
E10058		202
E10076		228
E10077		228
E10136		199
E10137		200
E10188		198
E10189		201
E10190		201
E10191		201
E10193		221, 224
E10200		201
E10214		198
E10215		198
E10216		198
E10278		208
E10279		208
E10280		208
E10281		208
E10282		208
E10283		208
E10355		215
E10356		215
E10357		215
E10358		215
E10437		208
E10445		209
E10446		209
E10447		200
E10448		200
E10659		210
E10736		228
E10737		228
E10821		215
E10822		215
E10823		215
E10825		215
E10826		215
E10838		205
E10846		215
E10847		215
E10853		215
E10865		198
E10866		198
E10867		198
E10868		198
E10945		209
E10946		210
E10976		199
E10977		199
E11017		209
E11018		209
E11019		209
E11020		209
E11021		209
E11022		209
E11043		202
E11196		198
E11197		198
E11198		198
E11199		198
E11200		198
E11201		198
E11202	CURUS	206
E11203	CURUS	206
E11204	CURUS	206
E11205	CURUS	206
E11206	CURUS	206
E11207	CURUS	206
E11208	CURUS	206
E11209	CURUS	206
E11210	CURUS	206
E11211	CURUS	206
E11212	CURUS	206
E11213	CURUS	206
E11214		208
E11215		208
E11216		208
E11217		208
E11218		208
E11219		208
E11220		212
E11221		212
E11222		212
E11223		212
E11224		212
E11225		212
E11226		200
E11227		200
E11231		200
E11232		200
E11248	CURUS	202
E11249	CURUS	202
E11250	CURUS	202
E11251	CURUS	202
E11267	CURUS	206
E11268	CURUS	206
E11273		202
E11274		207
E11302		199
E11311		200
E11416		207
E11417		207
E11421		207
E11422		207
E11426		207
E11427		207
E11431		207
E11432		207
E11486	CURUS	198
E11487	CURUS	198
E11492	CURUS	198
E11493	CURUS	198
E11504	CURUS	205
E11505	CURUS	205
E11506	CURUS	205
E11507	CURUS	205
E11508	CURUS	199
E11509	CURUS	199
E11510		199
E11572		228
E11641		213
E11642		213
E11643		213
E11644		214
E11645		200

Visit our website: www.ifm-electronic.com

Order no.	Approvals	Catalogue page
E11664		228
E11693		215
E11694		215
E11697		200
E11717		208
E11718		208
E11719		208
E11720		208
E11721		208
E11722		208
E11723		208
E11724		208
E11725		209
E11726		209
E11727		209
E11728		209
E11729		209
E11730		209
E11731		209
E11732		209
E11733		209
E11734		210
E11735		208
E11736	CSA, UL	201
E11737	CSA, UL	201
E11738	CSA, UL	201
E11739	CSA, UL	201
E11740	CSA, UL	201
E11741	CSA, UL	201
E11742	CSA, UL	201
E11743	CSA, UL	201
E11744	CSA, UL	201
E11745	CSA, UL	201
E11746	CSA, UL	201
E11747	CSA, UL	201
E11775		214
E11857		213
E11858		213
E11859		213
E11860		213
E11861		212
E11862		212
E11863		212
E11864		213
E11865		213
E20428		202
E20430		202
E20738		199
E30000		221
E30003		221
E30004		221
E30006		221
E30007		221
E30009		221
E30010		221
E30013		221
E30016		224
E30017		224
E30018		224
E30024		224
E30025		224
E30046		224
E30047		224
E30049		224
E30050		221
E30051		221
E30052		219, 224
E30055		224
E30056		224
E30058		221
E30059		221
E30061		224
E30064		221
E30065		221
E30070		221
E30071		221
E30072		221
E30073		224
E30078		221, 224
E30079		221, 224
E30080		228
E30082		228
E30089		224
E30090		224
E30091		224
E30098		228
E30101		221
E30104		221
E30107		224
E30108		224
E30109		224
E30110		111
E30115		228
E30393	EHEDG	224
E30397		224
E33001		219, 221
E33011		219, 224
E33012		219, 221
E33013		219, 221
E33014		219, 221
E33015		219, 221
E33021	EHEDG	219, 221
E33022	EHEDG	219, 221
E33025		219, 221
E33031		219, 221
E33032		219, 221
E33033		219, 221
E33042		219, 221
E33043		219, 221
E33051		219, 221
E33061		219, 221
E33071		219, 221
E33072		219, 224
E33082		219, 224
E33092		219, 224
E33100		219
E33103		219, 224
E33401	EHEDG	224
E33402	EHEDG	224
E33430	EHEDG	224
E33601		221
E33612		221
E33622		221
E33901		221
E33902		221
E33910		221
E33912		221
E33922		221
E34005	EHEDG	224
E34010	EHEDG	224
E34110		224
E34410		224
E35010		224
E35020		224
E35030		224
E35050		224
E35110		224
E35120		224
E35220		224
E36010		224
E36020		224
E36030		224
E37010		224
E37020		224
E37030		224
E40048		219
E40057		219
E40075		215
E40076		215
E40078		219

Visit our website: www.ifm-electronic.com

Order no.	Approvals	Catalogue page
E40079		219
E40080		219
E40081		219
E40082		219
E40083		219
E40096		219, 224
E40097		219, 224
E40098		219, 224
E40099		219, 224
E40100		219, 224
E40101		219, 224
E40102		219
E40104		219, 224
E40107		224
E40114		219, 224
E40115		219
E40124		219, 224
E40128		219, 224
E40129		219
E40130		219
E40138		219
E40148		224
E40151		219
E40152		219
E40153		219
E40161		219
E40162		219
E40163		219
E40164		219
E43000		218
E43001		218
E43002		218
E43003		218
E43004		218
E43005		218
E43006		218
E43007		218
E43008		218
E43009		218
E43012		218
E43013		218
E43014		218
E43015		218
E43016		218
E43019		218
E43100		218
E43101		218
E43102		218
E43103		218
E43201		218
E43202		218
E43203		218
E43204		218
E43205		218
E43206		218
E43910		218
E60122		200
E60123		205
E60124		200
E60128		205
E60136		200
E60141		201
E60144		200
E60146		201
E60147		200
E60157		201
E60174		200
E60175		200
E70142		202
E70189		213
E70203		207
E70271		198
E89010		228
E89013		228
E89150		185
EVC001	CURUS	198, 211
EVC002	CURUS	199, 211
EVC003	CURUS	199, 211
EVC004	CURUS	198, 211
EVC005	CURUS	198, 211
EVC006	CURUS	198, 211
EVC007	CURUS	199, 211
EVC008	CURUS	199, 211
EVC009	CURUS	199, 211
EVC011	CURUS	206
EVC012	CURUS	206
EVC013	CURUS	206
EVC014	CURUS	206
EVC031	CURUS	206
EVC032	CURUS	206
EVC033	CURUS	206
EVC034	CURUS	206
EVC051	CURUS	206
EVC052	CURUS	206
EVC053	CURUS	206
EVC054	CURUS	206
EVC070	CURUS	199
EVC071	CURUS	199
EVC072	CURUS	199
EVC073	CURUS	199
EVC074	CURUS	199
EVC075	CURUS	199
EVT001		212
EVT002		212
EVT003		212
EVT004		212
EVT005		212
EVT006		212
EVT007		212
EVT008		212
EVT009		212
EVT010		213
EVT011		213
EVT012		213
EVT013		212
EVT014		213
EVT015		213
EVT042		213
EVT043		213
EVT044		213
EVT045		213
LI2041		35
LI2042		35
LI2043		35
LI5041		35
LI5042		35
LI5043		35
LI5044		35
LK1022	CUL	23
LK1023	CUL	23
LK1024	CUL	23
LK1222		23
LK1223		23
LK1224		23
LK3122	CUL	23
LK3123	CUL	23
LK3124	CUL	23
LK8122	CUL	23
LK8123	CUL	23
LK8124	CUL	23
LL8022	CUL	29
LL8023	CUL	29
LL8024	CUL	29
LR7000		25
LR7300		25
LR8000		25
LR8300		25
LT8022	CUL	27
LT8023	CUL	27
LT8024	CUL	27

Visit our website: www.ifm-electronic.com

Order no.	Approvals	Catalogue page
PA3020		103
PA3021		103
PA3022	CUL	103
PA3023	CUL	103
PA3024	CUL	103
PA3026	CUL	103
PA3027	CUL	103
PA3029	CUL	103
PA3060		103
PA3228	CUL	103
PA3521		103
PA3522	CUL	103
PA3523	CUL	103
PA3524	CUL	103
PA9020		103
PA9021		103
PA9022	CUL	103
PA9023	CUL	103
PA9024	CUL	103
PA9026	CUL	103
PA9027	CUL	103
PE3000	CUL	93
PE3001	CUL	93
PE3002	CUL	93
PE3003	CUL	93
PE3004	CUL	93
PE3006	CUL	93
PE3009	CUL	93
PE3029	CUL	93
PE7002		93
PE7003	CUL	93
PE7004	CUL	93
PE7006	CUL	93
PE7009	CUL	93
PF003A	FDA	127
PF008A	FDA	127
PF2053	CUL, EHEDG, FDA	125
PF2054	CUL, EHEDG, FDA	125
PF2056	CUL, EHEDG, FDA	125
PF2057	CUL, EHEDG, FDA	125
PF2058	CUL, EHEDG, FDA	125
PF2609	CUL, FDA	125
PF2652	CUL, FDA	125
PF2653	CUL, FDA	125
PF2654	CUL, FDA	125
PF2656	CUL, FDA	125
PF2657	CUL, FDA	125
PF2658	CUL, FDA	125
PF2953	CUL, FDA	125
PF2954	CUL, FDA	125
PF2956	CUL, FDA	125
PF2957	CUL, FDA	125
PI1093	EHEDG, FDA	117
PI1094	EHEDG, FDA	117
PI1095	EHEDG, FDA	117
PI1096	EHEDG, FDA	117
PI1097	EHEDG, FDA	117, 33
PI1098	EHEDG, FDA	117, 33
PI1099	EHEDG, FDA	117, 33
PI1693	EHEDG, FDA	117
PI1694	EHEDG, FDA	117
PI1695	EHEDG, FDA	117
PI1696	EHEDG, FDA	117
PI1697	EHEDG, FDA	117
PI1698	EHEDG, FDA	117
PI1699	EHEDG, FDA	117
PI2093	EHEDG, FDA	115
PI2094	EHEDG, FDA	115
PI2095	EHEDG, FDA	115
PI2096	EHEDG, FDA	115
PI2097	EHEDG, FDA	115, 33
PI2098	EHEDG, FDA	115, 33
PI2099	EHEDG, FDA	115, 33
PI2692	EHEDG, FDA	115
PI2693	EHEDG, FDA	115
PI2694	EHEDG, FDA	115
PI2695	EHEDG, FDA	115
PI2696	EHEDG, FDA	115
PI2697	EHEDG, FDA	115
PI2698	EHEDG, FDA	115
PI2699	EHEDG, FDA	115
PI2993	FDA	115
PI2994	FDA	115
PI2995	FDA	115
PI2996	FDA	115
PI2997	FDA	115
PI7093	EHEDG, FDA	119
PI7094	EHEDG, FDA	119
PI7096	EHEDG, FDA	119
PI7993	FDA	119
PIM093	CUL, EHEDG, FDA	121
PIM094	CUL, EHEDG, FDA	121
PIM693	CUL, EHEDG, FDA	121
PIM694	CUL, EHEDG, FDA	121
PK6520	CUL	99
PK6521	CUL	99
PK6522	CUL	99
PK6523		99
PK6524	CUL	99
PK6730	CUL	99
PK6731		99
PK6732	CUL	99
PK6734	CUL	99
PK7520	CUL	99
PK7521	CUL	99
PK7522	CUL	99
PK7524	CUL	99
PK8730	CUL	99
PK8731		99
PK8732	CUL	99
PK8734	CUL	99
PL2053	CUL, EHEDG, FDA	123
PL2054	CUL, EHEDG, FDA	123
PL2056	CUL, EHEDG, FDA	123
PL2057	CUL, EHEDG, FDA	123
PL2058	CUL, EHEDG, FDA	123
PL2652	CUL, EHEDG, FDA	123
PL2653	CUL, EHEDG, FDA	123
PL2654	CUL, EHEDG, FDA	123
PL2656	CUL, EHEDG, FDA	123
PL2657	CUL, EHEDG, FDA	123
PL2658	CUL, EHEDG, FDA	123
PM2053	CUL, EHEDG, FDA	123
PM2054	CUL, EHEDG, FDA	123
PM2055	CUL, EHEDG, FDA	123
PM2056	CUL, EHEDG, FDA	123
PM2057	CUL, EHEDG, FDA	123
PM2058	CUL, EHEDG, FDA	123
PM2653	CUL, EHEDG, FDA	123
PM2654	CUL, EHEDG, FDA	123
PM2655	CUL, EHEDG, FDA	123
PM2656	CUL, EHEDG, FDA	123
PM2657	CUL, EHEDG, FDA	123
PM2658	CUL, EHEDG, FDA	123
PN004A		127
PN006A		127
PN007A		127
PN009A		127
PN014A		127
PN016A		127
PN2009	CUL	95
PN2020	CUL	95
PN2021	CUL	95
PN2022	CUL	95
PN2023	CUL	95
PN2024	CUL	95
PN2026	CUL	95
PN2027	CUL	95
PN2028	CUL	95
PN2069	CUL	31, 95

Visit our website: www.ifm-electronic.com

Order no.	Approvals	Catalogue page
PN3000	CUL	97
PN3001	CUL	97
PN3002	CUL	97
PN3003	CUL	97
PN3004	CUL	97
PN3006	CUL	97
PN3007	CUL	97
PN3029	CUL	97
PN3060		97
PN5000	CUL	91
PN5001	CUL	91
PN5002	CUL	91
PN5003	CUL	91
PN5004	CUL	91
PN5006	CUL	91
PN5007	CUL	91
PN7000	CUL	91
PN7001	CUL	91
PN7002	CUL	91
PN7003	CUL	91
PN7004	CUL	91
PN7006	CUL	91
PN7007	CUL	91
PN7009	CUL	91
PN7060		91
PNI021		109
PNI022		109
PNI023		109
PNI024		109
PP2000	CUL	113
PP7530	CUL, E1	101
PP7531	CUL, E1	101
PP7532	CUL, E1	101
PP7533	CUL, E1	101
PP7534	CUL, E1	101
PPA020		103
PPA024	CUL	103
PPA060		103
PS7570		105
PY2068	CUL	31, 95
PY7000		107
PY7001		107
PY7002		107
PY7003		107
PY7032	CUL	107
SD2000	CUL	73
SD5000		75
SD5100		75
SD6000	CUL	73
SD6100	CUL	75
SD8000	CUL	73
SD9000	CUL	73
SF111A		69
SF120A		69
SF121A		69
SF211A		69
SF220A		69
SF221A		69
SF223A		69
SF2405		63
SF2410		63
SF311A		69
SF320A	IEC	69
SF321A	IEC	69
SF323A		69
SF3405		63
SF3410		63
SF5200		61
SF5300		61
SF5350		61
SF5700		61
SF5800		61
SI5000	CUL	53
SI5002	CUL	53
SI5004	CUL	57
SI5006	CUL	53
SI5007	CUL	57
SI5010		55
SI6000		67
SI6100		67
SI6200		67
SL0101		59
SL0201		59
SL5101		59
SN0150	CUL	65
SN2301	IEC	71
SN2302	IEC	71
SR0150	CUL	65
SR2301	IEC	71
SU7000	CUL	77
SU7200	CUL	77
SU8000	CUL	77
SU8200	CUL	77
TA3130	CUL	145
TA3231	CUL	145, 151
TA3430	CUL, EHEDG	145, 151
TA3431	CUL, EHEDG	145, 151
TA3437	EHEDG	145, 151
TAA131		145
TAA431	EHEDG	145, 151
TAD161	CUL, EHEDG	153
TAD171	EHEDG	153
TAD961	CUL, EHEDG	153
TAD971	EHEDG	153
TM0061	CUL, EHEDG	147
TM1061	CUL, EHEDG	147
TM9061	CUL, EHEDG	147
TM9550		141
TN2530	CUL	137
TN7530	CUL	137
TR2432	CUL	139
TR7430	CUL	139
TR8430	CUL	139
TS2051	CUL	143, 149
TS2056		143, 149
TS2151		143
TS2229		143
TS2251		143
TS2256		143
TS2659		143
TS2759		143
TS335A		143
TS5051	CUL	143, 149
TS5151		143
TT0061		147
TT1050		141
TT1061		147
TT1150		141
TT1250		141
TT2050		141
TT2150		141
TT2250		141
TT3050		141
TT3150		141
TT3250		141
TT5050		141
VB1001	CUL	163
VE1001	CUL	163
VE1002	CUL	163
VE1101	CUL	165
VE1102	CUL	165
VE1103		163
VE111A		171
VE112A		171
VES001		228
VES003		228
VSA001		169
VSE001		167
ZZ0050		111

Visit our website: www.ifm-electronic.com



Level sensors

efector160®

Continuous and point level measurement

System description 18 - 19
Selection chart 20 - 21

Universal application



Continuous measurement for industrial applications

Type LK with display 22 - 23
Type LR with display 24 - 25
Type LT with display 26 - 27
Type LL with display 28 - 29
Types PY / PN with display 30 - 31

Special application



Continuous measurement for hygienic areas and viscous media

Type PI with display 32 - 33

Universal application



Point level measurement for industrial applications

Type LI 34 - 35

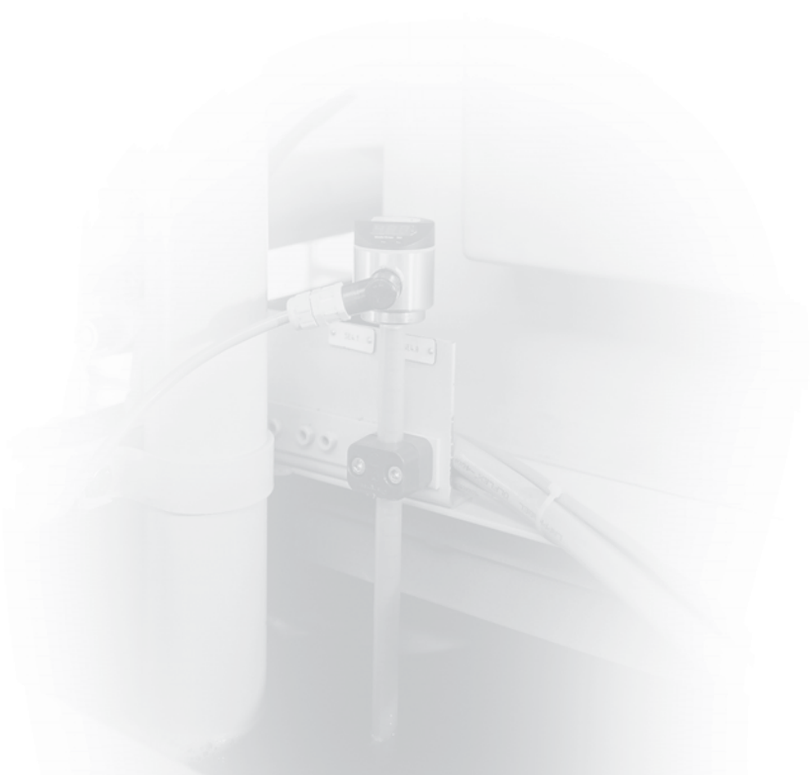

Introduction

In industrial applications where industrial fluids or bulk material are used, storage tanks or silos are used for processing or storing of media. Tanks are filled and emptied almost automatically. Sensors are used to detect the level. Even critical process states such as an empty hydraulic tank and the resulting running dry of the pump or the unintentional overspill of a tank are permanently monitored by level sensors.

Advantages of electronic sensors

Level measurement distinguishes between direct measurement in the medium and the indirect detection from the outside (for example through the tank wall by means of capacitive sensors). Deposits and wear and tear often lead to failures in particular if mechanical switches are in contact with the medium. The electronic ifm sensors however can do without any mechanical component. This makes the sensors especially robust and reliable. Regular maintenance and cleaning are not necessary. Failures for example due to overspill or downtime of plant sections are a matter of the past. The suitable electronic sensors work without any problem even in aggressive media, such as lubricants and coolants.

Another advantage of electronic sensors is the local indication of the level or the easy setting of the switching threshold simply by pressing a button as offered for some types.

Measurement in the medium: The LK probe is directly immersed in the medium to be monitored.



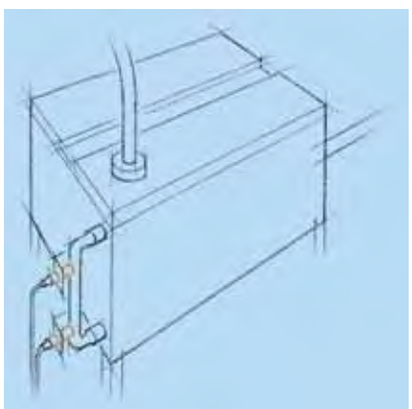

Indirect detection from the outside: Capacitive level sensors detect the level through the pipe wall.

Types of level detection and signal processing

There are two basic types of level detection in tanks: continuous measurement and the detection of defined limits.

Limit detection: Two probes for minimum / maximum monitoring.

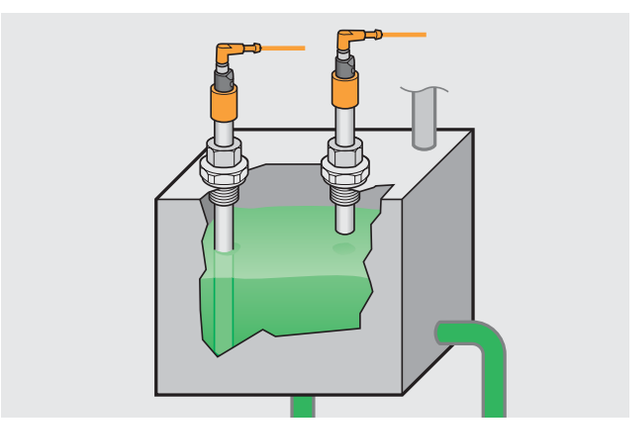

Continuous level measurement

For continuous level measurement the level is detected continuously, converted into an electrical signal and indicated. Depending on the type the units have freely programmable switching outputs or an analogue output for further processing. The four freely programmable switching outputs enable easy setup for complete control without additional electronics. Example: Two switch points monitor the minimum and maximum of the acceptable range. The two remaining switch points signal overspill or unintentional complete emptying of the tank.

Continuous level sensors from ifm electronic use three physical measuring principles: capacitive, hydrostatic and guided wave radar.



For special applications: Capacitive probe for monitoring oils and coolants.

Visit our website: www.ifm-electronic.com

For the capacitive measurement the tank and the material form an electrical capacitor. The capacity changes analogously to the level and is converted into a measure for the level by means of a microprocessor. The patented sensor system allows an automatic adaptation of the sensor to the medium to be measured. Storage costs are saved and maintenance is simplified.

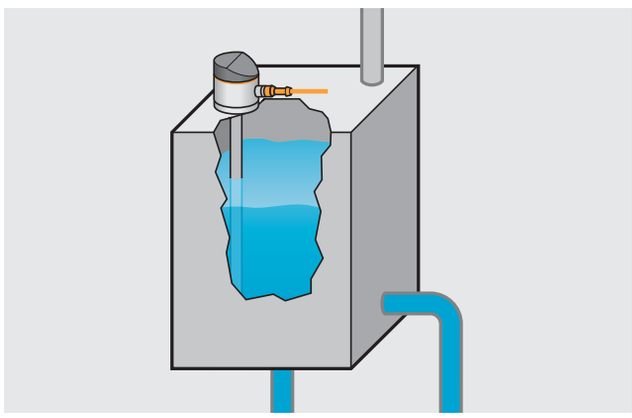

Continuous level sensors: The sensors adapt to the medium automatically.

For hydrostatic level measurement a ceramic measuring cell detects the hydrostatic pressure of the material. Here the pressure change is a measure for the level. Suitable process connections enable flush and thus sanitary mounting of the pressure sensors into the tank to be measured. They are thus perfectly suitable for the food industry.

Innovative measuring principle – guided wave radar – for level monitoring in compact tanks.

The **efector *gwr*** operates to the principle of guided wave radar and measures the level using electromagnetic pulses in the nanosecond range. The pulses are transmitted by the sensor head and guided along the probe. When the microwave pulse hits the medium to be detected it is reflected and guided back to the sensor where it is evaluated.

The time between transmitting and receiving the pulse directly relates to the travelled distance and the current level.

Limit detection

For limit detection a defined level reached is detected and converted into an electrical switching signal. Different capacitive sensors are for use in liquids as well as in bulk material. The variety of types such as threaded, rectangular or smooth sensors enable fast and economic adaptation of the sensors to the shape of the respective tank. Suitable accessories enable simple installation.

Thanks to the microprocessor technology the user can adjust the sensors to the medium by pressing buttons. The integrated electronics ensure an exact repeatability of the set switch points. An electronic lock protects against unauthorised manipulation of the sensors.

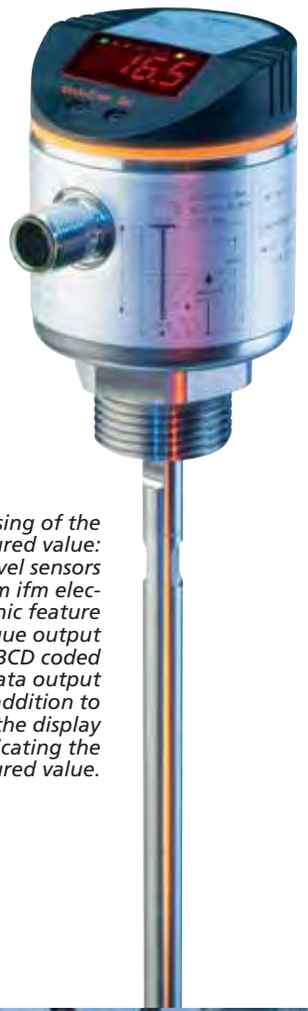

Processing of the measured value: The level sensors from ifm electronic feature analogue output or BCD coded data output in addition to the display indicating the measured value.



*In industrial part washer applications the **efector gwr** reliably detects the level of aqueous cleaning agents at medium temperatures up to 80 °C.*

Visit our website: www.ifm-electronic.com

Selection chart

Housing / Dimensions / Process connection [mm]		Measurement		Measuring principle			Medium		Application	Page
		Continuous	Point level	Capacitive	Hydrostatic	gwr*	Liquid	Viscous		
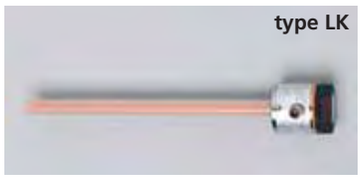 type LK	probe	•	–	•	–	–	•	–	●	22
 type LR	G 3/4 male 3/4 NPT	•	–	–	–	•	•	–	●	24
 type LT	probe	•	–	•	–	–	•	–	●	26
 type LL	probe	•	–	•	–	–	•	–	●	28
 type PY / PN	G 1/4 female	•	–	–	•	–	•	•	●	30
 type PI	ASEPTOFLEX	•	–	–	•	–	•	•	●	32
 type LI	probe	–	•	•	–	–	•	–	●	34

*gwr = guided wave radar

For industrial applications

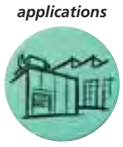

For hygienic areas and viscous media



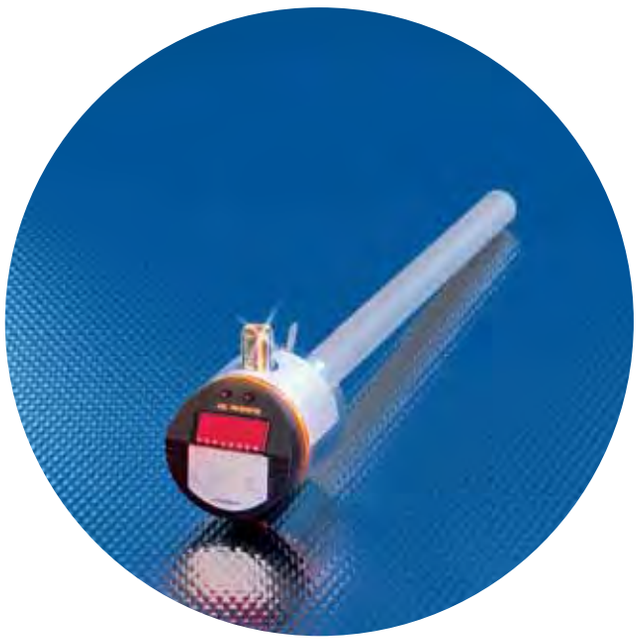

- **Preferably used for applications in oils and coolants.**
- **The integrated LED display provides direct read-out of the current level.**
- **Freely selectable switch points or analogue signal output.**
- **High reliability due to the elimination of mechanical components.**
- **Versions with approval to the German overspill standard WHG section 19.**









Accessories

Type	Description	Order no.
	Mounting set Ø 16 mm for capacitive level sensors LK, LI, LT, LL	**E43016**
	Welding adapter Ø 50 D16 for capacitive level sensors LK, LI, LT, LL	**E43002**
	Mounting adapter G 3/4 D16 for capacitive level sensors LK, LI, LT, LL	**E43003**
	Mounting adapter G 1 D16 for capacitive level sensors LK, LI, LT, LL	**E43004**
	Flange plate 73-90 D16 for capacitive level sensors LK, LI, LT, LL	**E43001**

Connectors and splitter boxes

Type	Description	Order no.
	Socket, M12, Group 7 2 m black, PUR cable	**EVC004**
	Socket, M12, Group 7 5 m black, PUR cable	**EVC005**
	Socket, M12, Group 15 2 m black, PUR cable	**E11231**
	Socket, M12, Group 15 5 m black, PUR cable	**E11232**
	Socket, M12, Group 7 2 m black, PUR cable	**EVC001**
	Socket, M12, Group 7 5 m black, PUR cable	**EVC002**

Further accessories are available starting on page 217

Further connectors and splitter boxes are available starting on page 191

	For industrial applications	*LK with display*	*LR with display*	*LT with display*	*LL with display*	*PY / PN with display*	*For hygienic areas and viscous media*	*PI with display*
Level sensors Continuous								
Page		*22 - 23*	*24 - 25*	*26 - 27*	*28 - 29*	*30 - 31*		*32 - 33*



Rod length 264, 472 and 728 mm
Electrical design: DC PNP
LK12xx: Approval to the German overspill standard WHG section 19

Rod length [mm]	Active zone [mm]	Inactive zone [mm]	U_b [V]	Current consumption [mA]	I_{load} 25°C / 60°C [mA]	Drawing no.	Order no.
M12 connector · Output function 1 x ⎍/⎍, 1 x overflow output · Connector groups 7, 8, 9 · Wiring diagram no. 1							
264	195	53 / 15	12...30	0...65 * / 35 ***	200	1	**LK1222**
472	390	53 / 30	12...30	0...65 * / 35 ***	200	1	**LK1223**
728	585	102 / 40	12...30	0...65 * / 35 ***	200	1	**LK1224**
M12 connector · Output 1 x analog 4...20 mA / 0...10 V, 1 x overflow output · Connector groups 7, 8, 10 · Wiring diagram no. 2							
264	195	53 / 15	18...30	0...70 * / 90 ** / 65 ***	200	2	**LK3122**
472	390	53 / 30	18...30	0...70 * / 90 ** / 60 ***	200	2	**LK3123**
728	585	102 / 40	18...30	0...70 * / 90 ** / 55 ***	200	2	**LK3124**
M12 connector · Output function 2 x ⎍/⎍ · Connector groups 7, 8, 9 · Wiring diagram no. 3							
264	195	53 / 15	18...30	0...70 * / 90 ** / 65 ***	200	2	**LK1022**
472	390	53 / 30	18...30	0...70 * / 90 ** / 60 ***	200	2	**LK1023**
728	585	102 / 40	18...30	0...70 * / 90 ** / 55 ***	200	2	**LK1024**
M12 connector · Output function 3 x ⎍/⎍, 1 x overflow output · Connector group 15 · Wiring diagram no. 26							
264	195	53 / 15	18...30	0...70 * / 90 ** / 65 ***	200	2	**LK8122**
472	390	53 / 30	18...30	0...70 * / 90 ** / 60 ***	200	2	**LK8123**
728	585	102 / 40	18...30	0...70 * / 90 ** / 55 ***	200	2	**LK8124**

Common technical data

Switch point accuracy: ± 5 %
Repeatability: ± 2 %
Dielectric constant medium: > 2
Protection: IP 67, III
Materials (wetted parts): PP
Housing materials: EPDM/X, FPM, stainless steel, NBR, PA, PBT, PC; PP
* for oils (Continuous)
** for oils (Short time)
*** for hydrous coolants, water and media similar to water
For water > 35° C use climatic tube!
(climatic tube s. page 218)

You can find scale drawings from page 236



- **2 or 4 progr. switching outputs with hysteresis and window function.**
- **Direct indication of the current level by LED display.**
- **Easy handling via the user menu.**
- **The rod can be cut to length, if needed.**
- **Excellent price / performance ratio.**









Accessories

Type	Description	Order no.
	Probe for level sensors LR, probe length 228 mm	E43203
	Probe for level sensors LR, probe length 438 mm	E43204
	Probe for level sensors LR, probe length 688 mm	E43205
	Flange plate 73-90 / G3/4 for level sensors LR	E43201
	Flange plate 65-80 / G3/4 for level sensors LR	E43202
	Protective cover for LK / LL / LR / LT sensors	E43910

Connectors and splitter boxes

Type	Description	Order no.
	Socket, M12, Group 7 2 m black, PUR cable	EVC001
	Socket, M12, Group 7 5 m black, PUR cable	EVC002
	Socket, M12, Group 9 2 m black, PUR cable, LED	EVC007
	Socket, M12, Group 9 5 m black, PUR cable, LED	EVC008
	Socket, M12, Group 15 2 m black, PUR cable	E11231
	Socket, M12, Group 15 5 m black, PUR cable	E11232
	Socket, M12, Group 15 10 m black, PUR cable	E11311

Further accessories are available starting on page 217

Further connectors and splitter boxes are available starting on page 191

	For industrial applications	LK with display	LR with display	LT with display	LL with display	PY / PN with display	For hygienic areas and viscous media	PI with display
Level sensors Continuous								
Page		22 - 23	24 - 25	26 - 27	28 - 29	30 - 31		32 - 33



Selectable rod lengths: 240, 450 and
Electrical design: DC PNP, 4-wire or 8-wire
Process connection: LR7000, LR8000: G 3/4, LR7300, LR8300: 3/4 NPT

Active range [mm]	Inactive range [mm]	Set point [mm]	Reset point [mm]	In steps of [mm]	Draw-ing no.	Order no.
M12 connector · Output 2 x ⎍ / ⎍ programmable · Wiring diagram no. 3						
190 / 400 / 650 *	40 / 10	15...200 / 15...410 / 15...660 *	10...195 / 10...405 / 10...655 *	5	3	**LR7000**
190 / 400 / 650 *	40 / 10	15...200 / 15...410 / 15...660 *	10...195 / 10...405 / 10...655 *	5	4	**LR7300**
M12 connector · Output 4 x ⎍ / ⎍ programmable · Wiring diagram no. 27						
190 / 400 / 650 *	40 / 10	15...200 / 15...410 / 15...660 *	10...195 / 10...405 / 10...655 *	5	5	**LR8000**
190 / 400 / 650 *	40 / 10	15...200 / 15...410 / 15...660 *	10...195 / 10...405 / 10...655 *	5	6	**LR8300**

Common technical data

Switch point accuracy: +/- 1.5 cm
Repeatability: +/- 0.5 cm
Dielectric constant medium: > 20
Protection: IP 67 II
Materials (wetted parts): stainless steel (303S22), PTFE, NBR
Housing materials: FKM, NBR, PBT, PC, PEI, PTFE, TPE-V, stainless steel (304S15)
Medium temperature: 0...80 °C
Maximum tank pressure: -1...4 bar
* For probe sonda E43203, E43204, E43205

You can find scale drawings from page 236

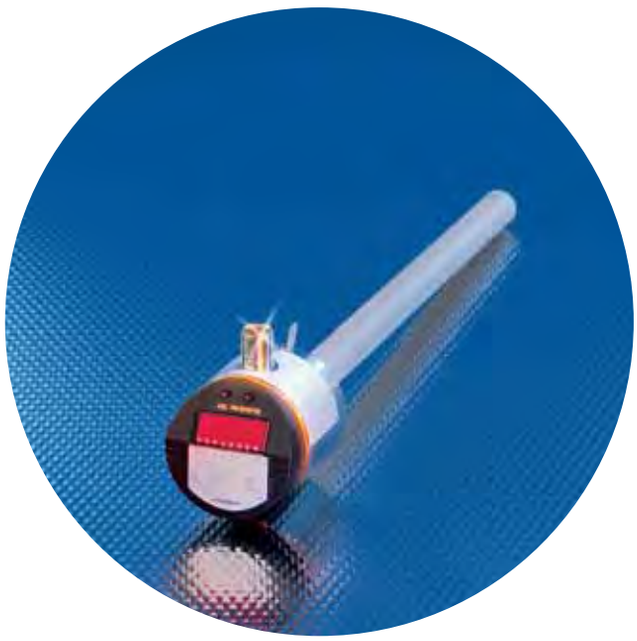

- **LED display for direct indication of level and temperature.**
- **Adjustable hysteresis and window function of the switching outputs.**
- **Reduced mounting complexity due to two measuring systems in one unit.**
- **No need for a second borehole in the hydraulic system.**
- **2 progr. switching outputs each for level and oil temperature monitoring.**







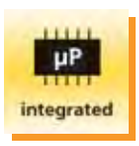

Accessories

Type	Description	Order no.
	Flange plate 65-80 D16 for capacitive level sensors LK, LI, LT, LL	**E43006**
	Flange plate 73-90 D16 for capacitive level sensors LK, LI, LT, LL	**E43001**
	Flange plate 54-52X52 D16 for capacitive level sensors LK, LI, LT, LL	**E43007**
	Mounting adapter G1 D16 for capacitive level sensors LK, LI, LT, LL	**E43004**
	Mounting adapter G3/4 D16 for capacitive level sensors LK, LI, LT, LL	**E43003**

Connectors and splitter boxes

Type	Description	Order no.
	Socket, M12, Group 15 2 m black, PUR cable	**E11231**
	Socket, M12, Group 15 5 m black, PUR cable	**E11232**

Further accessories are available starting on page 217

Further connectors and splitter boxes are available starting on page 191

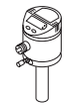

Probe lengths 264, 472 and 728 mm
Direct level and temperature display
Protection rating IP 67

Probe length [mm]	Active range [mm]	Inactive range [mm]	U_b [V]	Medium temperature [°C]	I_B [mA]	Draw-ing no.	Order no.
M12 connector · Output 2 x ⁄ / ⁄ prog. (level) 2 x ⁄ / ⁄ progr. (temp.) · Connector gr. 15 · Wiring diagr. no. 27							
264	195	53 / 15	18...30	0...70 * / 0...90 **	200	7	**LT8022**
472	390	53 / 30	18...30	0...70 * / 0...90 **	200	7	**LT8023**
728	585	102 / 40	18...30	0...70 * / 0...90 **	200	7	**LT8024**

Common technical data

Switch point accuracy: ± 5 %
Repeatability: ± 2 %
Dielectric constant medium: > 2
Protection: IP 67, III
Materials (wetted parts): PP
Housing materials: FKM, NBR, PBT, PC, PP, TPE / V, stainless steel
* Continuous
** Short time

You can find scale drawings from page 236

For industrial applications
LI
Level sensors Point level





34 - 35

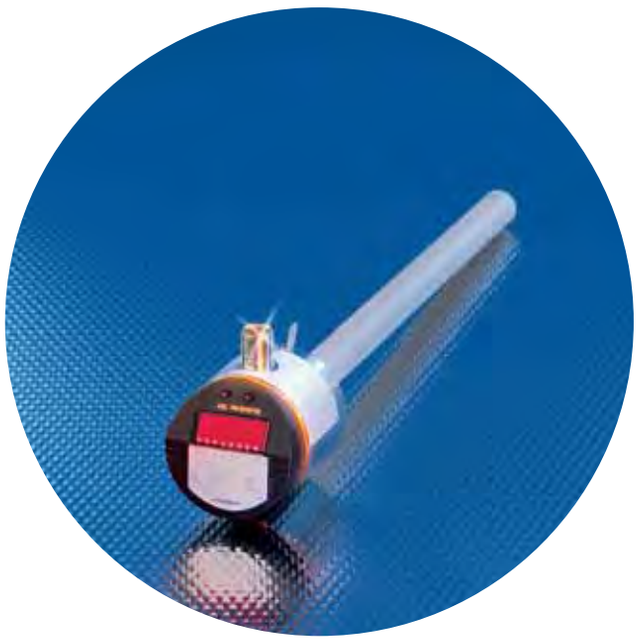

- **Level and leakage monitoring in power packs.**
- **Direct indication of the current level by LED display.**
- **Reliable detection of sudden and progressive leakage.**
- **Freely programmable switching outputs for level monitoring.**
- **Easy operation and teach function via the user menu.**









Accessories

Type	Description	Order no.
	Mounting set Ø 16 mm for capacitive level sensors LK, LI, LT, LL	**E43016**
	Mounting adapter G3/4 D16 for capacitive level sensors LK, LI, LT, LL	**E43003**
	Mounting adapter G1 D16 for capacitive level sensors LK, LI, LT, LL	**E43004**
	Flange plate 73-90 D16 for capacitive level sensors LK, LI, LT, LL	**E43001**
	Flange plate 65-80 D16 for capacitive level sensors LK, LI, LT, LL	**E43006**
	Flange plate 54-52X52 D16 for capacitive level sensors LK, LI, LT, LL	**E43007**

Connectors and splitter boxes

Type	Description	Order no.
	Socket, M12, Group 15 2 m black, PUR cable	**E11231**
	Socket, M12, Group 15 5 m black, PUR cable	**E11232**
	Socket, M12, Group 15 10 m black, PUR cable	**E11311**

Further accessories are available starting on page 217

Further connectors and splitter boxes are available starting on page 191

	For industrial applications	LK with display	LR with display	LT with display	LL with display	PY / PN with display	For hygienic areas and viscous media	PI with display
Level sensors Continuous								
Page		22 - 23	24 - 25	26 - 27	28 - 29	30 - 31		32 - 33

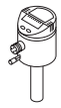

Probe lengths: 264, 472 and 728 mm
Electronic design: DC PNP, 8-wire
M12 connector

Probe length [mm]	Active range [mm]	Inactive range [mm]	U_b [V]	Medium temperature [°C]	I_B [mA]	Draw-ing no.	Order no.
M12 connector (according to EN 61076-2-101) · Output function 4 x ⎓ / ⏚ · Connector group 15 · Wiring diagram no. 28							
264	195	53 / 15	18...30	0...70 * / 0...65 **	200	7	**LL8022**
472	390	53 / 30	18...30	0...70 * / 0...60 **	200	7	**LL8023**
728	585	102 / 40	18...30	0...70 * / 0...55 **	200	7	**LL8024**

Common technical data

Switch point accuracy: +/- 5 %
Repeatability: +/- 2 %
Dielectric constant medium: > 2
Protection: IP 67 II
Materials (wetted parts): PP
Housing materials: FKM, NBR, PBT, PC, PEI, PP, TPE-V, stainless steel
* for oils
** for hydrous coolants, water and media similar to water
For water > 35° C use climatic tube!
(climatic tube s. page 218)

You can find scale drawings from page 236

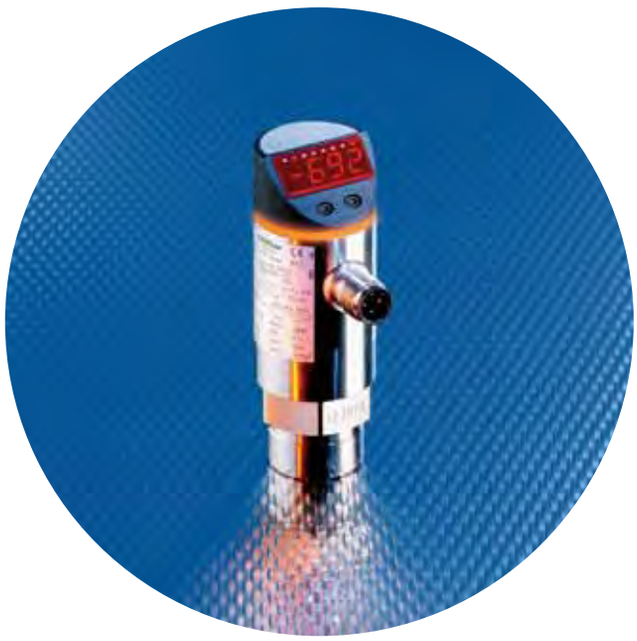

- **High-precision level measurement with long-term stability in liquids.**
- **Independent of the electrical characteristics of the bulk material.**
- **No interference in the case of foaming or high temperatures.**
- **Analogue transmission of the level in combination with switching output.**
- **Variable connection concept by means of a variety of process fittings.**



Accessories

Type	Description	Order no.
	Adapter, G 1/4 - G 1/2	**E30000**
	Adapter, G 1/4 - G 1/4	**E30007**
	Protective cover, sealable	**E30006**

Connectors and splitter boxes

Type	Description	Order no.
	Socket, M12, Group 58 5 m orange, PVC cable	**EVT004**
	Socket, M12, Group 58 10 m orange, PVC cable	**EVT005**
	Socket, M12, Group 7 2 m black, PUR cable	**EVC001**
	Socket, M12, Group 7 5 m black, PUR cable	**EVC002**

Further accessories are available starting on page 217

Further connectors and splitter boxes are available starting on page 191

	For industrial applications	*LK with display*	*LR with display*	*LT with display*	*LL with display*	*PY / PN with display*	*For hygienic areas and viscous media*	*PI with display*
Level sensors Continuous								
Page		*22 - 23*	*24 - 25*	*26 - 27*	*28 - 29*	*30 - 31*		*32 - 33*

Output 1: switching output programmable
Output 2: switching output programmable or analog output 4...20 mA / 0...10 V
measuring accuracy : PY2068: 0.2 %, PN2069: 0.6 %

Measuring range [bar]	$P_{overload}$ max. [bar]	$P_{bursting}$ min. [bar]	Analog lower end [bar]	Analog upper end [bar]	Switch-on point SP1 / SP2 [bar]	Switch-off point rP1 / rP2 [bar]	In steps of [bar]	Draw-ing no.	Order no.
Process connection: G 1/4 I · Medium temperature: -25...80 °C · Connector groups 7, 8, 10 · Wiring diagram no. 29									
-0.25...0.25	10	30	-0.25...0.125	-0.125...0.25	-0.248...0.25	-0.25...0.248	0.001	8	**PY2068**
Process connection: G 1/4 I · Medium temperature: -25...80 °C · Connector groups 7, 8, 10 · Wiring diagram no. 30									
-0.5...0.5	10	30	-0.5...-0.1	-0.25...0.5	-0.496...0.5	-0.5...0.496	0.001	9	**PN2069**

Note: For hydrostatic level measurement the above-mentioned sensors are mounted in the bottom of the tank.

Common technical data

Ub: 20...30 DC
Current rating: 1 x or 2 x 250 mA
Current consumption: < 60 mA
Materials (wetted parts): stainless steel, ceramics
Shock resistance: 50 g (11 ms)
Vibration resistance: 20 g (10...2,000 Hz)
Protection: IP 67
For further data see www.ifm-electronic.com

You can find scale drawings from page 236

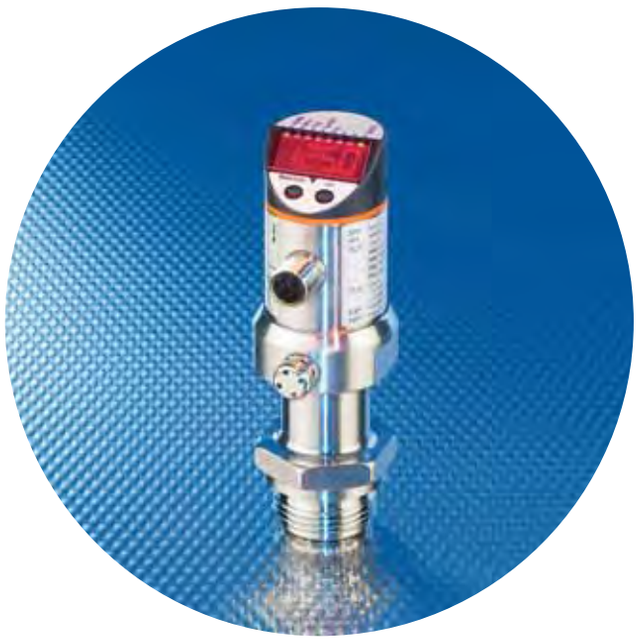

- **Level measurement with long-term stability in aseptic applications.**
- **Independent of the electrical characteristics of the bulk material.**
- **0.2 percent measuring accuracy and temperature compensation.**
- **Level indication in % referred to the final value of the measuring range.**
- **The right connection for each process, e.g. SMS, Clamp, pipe fitting.**

IP 67 IP 69 K | FDA | EHEDG certified | Vibration and shock resistant

Accessories

Type	Description	Order no.
	Welding adapter, Ø 50 mm	**E30052**
	Protective cover, stainless steel (320S31), O-ring: Viton	**E30101**
	Protective cover, stainless steel (320S31), O-ring: EPDM	**E30104**
	Aseptoflex adapter, DIN11851 - 1.5" / DN40	**E33012**
	Aseptoflex adapter, Clamp 1.5"	**E33001**

Connectors and splitter boxes

Type	Description	Order no.
	Socket, M12, Group 58 5 m orange, PVC cable	**EVT004**
	Socket, M12, Group 58 10 m orange, PVC cable	**EVT005**
	Socket, M12, Group 7 2 m black, PUR cable	**EVC001**
	Socket, M12, Group 7 5 m black, PUR cable	**EVC002**

Further accessories are available starting on page 217

Further connectors and splitter boxes are available starting on page 191

	For industrial applications	LK with display	LR with display	LT with display	LL with display	PY / PN with display	For hygienic areas and viscous media	PI with display
Level sensors Continuous								
Page		22 - 23	24 - 25	26 - 27	28 - 29	30 - 31		32 - 33

Output 1: switching output programmable; Output 2: switching output programmable or analog output 4...20 mA / 0...10 V, zero and span adjustable
PI10xx: Two-wire connection with 4..20 mA analogue output

Measuring range [bar]	$P_{overload}$ max. [bar]	$P_{bursting}$ min. [bar]	Analog lower end [bar]	Analog upper end [bar]	Switch-on point SP1 / SP2 [bar]	Switch-off point rP1 / rP2 [bar]	In steps of [bar]	Draw-ing no.	Order no.
Process connec.: Aseptoflex adapter · Medium temp.: -25...125 °C (145 °C max. 1h) · Connec. gr. 58, 59, 61, 64 · Wiring diag. no. 29									
-1...1	10	30	-1...0.5	-0.5...1	-0.998...1	-1...0.998	0.001	10	**PI2099**
-0.0124...0.25	10	30	-0.0124...0.1874	0.05...0.25	-0.012...0.25	-0.0124...0.2496	0.0002	10	**PI2098**
-0.05...1	10	30	-0.05...0.75	0.2...1	-0.048...1	-0.05...0.998	0.001	10	**PI2097**
Process connec.: Aseptoflex adapter · Medium temp.: -25...125 °C (145 °C max. 1h) · Connec. gr. 58, 59, 61, 64 · Wiring diagr. no. 31									
-1...1	10	30	-1...0.5	-0.5...1	–	–	0.001	10	**PI1099**
-0.0124...0.25	10	30	-0.0124...0.1874	0.05...0.25	–	–	0.00002	10	**PI1098**
-0.05...1	10	30	-0.05...0.75	0.2...1	–	–	0.001	10	**PI1097**

Note: For hydrostatic level measurement the above-mentioned sensors are mounted in the bottom of the tank.

Common technical data

Ub: 20...30 DC
Current rating: 250 mA
Current consumption: < 50 mA
Characteristics deviation: < ± 0.2 %
Materials (wetted parts): stainless steel (316S12), ceramics, PTFE
Shock resistance: 50 g (11 ms)
Vibration resistance: 20 g (10...2,000 Hz)
Protection: IP 67 / IP 69K
For further data see
www.ifm-electronic.com

You can find scale drawings from page 236

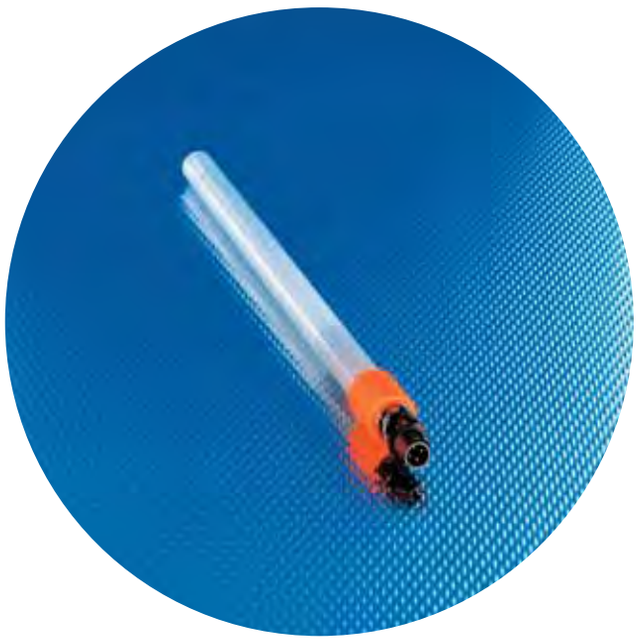

- **Binary point level switch for oils and coolants.**
- **Safe medium detection even in the case of soiling and foaming.**
- **The modular installation concept reduces the usual variety of types.**
- **Easy setting of switch point via push-buttons.**
- **Approval for overspill protect. to the German overspill std. WHG, sec. 19.**









Accessories

Type	Description	Order no.
	Mounting set Ø 16 mm for capacitive level sensors LK, LI, LT, LL	**E43016**
	Welding adapter Ø 50 D16 for capacitive level sensors LK, LI, LT, LL	**E43002**
	Flange plate 100-125 D16 for capacitive level sensors LK, LI, LT, LL	**E43005**
	Flange plate 65-80 D16 for capacitive level sensors LK, LI, LT, LL	**E43006**
	Mounting adapter G 3/4 D16 for capacitive level sensors LI	**E43019**

Connectors and splitter boxes

Type	Description	Order no.
	Socket, M12, Group 7 2 m black, PUR cable	**EVC004**
	Socket, M12, Group 7 5 m black, PUR cable	**EVC005**
	Socket, M12, Group 58 5 m orange, PVC cable	**EVT004**
	Socket, M12, Group 58 10 m orange, PVC cable	**EVT005**
	Socket, M12, Group 7 2 m black, PUR cable	**EVC001**
	Socket, M12, Group 7 5 m black, PUR cable	**EVC002**
	Socket, M12, Group 58 5 m orange, PVC cable	**EVT001**
	Socket, M12, Group 58 10 m orange, PVC cable	**EVT002**

Further accessories are available starting on page 217

Further connectors and splitter boxes are available starting on page 191

	For industrial applications	*LK with display*	*LR with display*	*LT with display*	*LL with display*	*PY / PN with display*	*For hygienic areas and viscous media*	*PI with display*
Level sensors Continuous								
Page		*22 - 23*	*24 - 25*	*26 - 27*	*28 - 29*	*30 - 31*		*32 - 33*

Rod lengths 132, 273, 481 and 737 mm
LED switching status indication, programming via pushbutton
Type LI2: Approval to the German overspill standard WHG, section 19

Electrical design	Rod length [mm]	Draw-ing no.	Order no.
M12 connector · Output function ⎍ · Connector groups 7, 8, 9, 10 · Wiring diagram no. 4			
DC PNP	132	1	**LI2041**
DC PNP	273	1	**LI2042**
DC PNP	481	1	**LI2043**
M12 connector · Output function ⎍/⎍ · Connector groups 7, 8, 9, 10 · Wiring diagram no. 32			
DC PNP	132	1	**LI5041**
DC PNP	273	1	**LI5042**
DC PNP	481	1	**LI5043**
DC PNP	737	1	**LI5044**

Common technical data

Ub: 10...36 DC
Dielectric constant medium: > 1.8
Current rating: 250 mA
Current consumption: < 13 mA
Voltage drop: < 2.5 V
Material: PP (Polypropylen)
Protection: IP 67, II
Medium temperature: oil: 0...65 °C,
for hydrous coolants: 0...35 °C
For further data see
www.ifm-electronic.com

You can find scale drawings from page 238

For industrial applications
LI
Level sensors Point level
34 - 35



Flow sensors

efector300

Flow sensors and transmitters, flow meters

System description 38 - 45
Selection chart 46 - 51

Universal application



Flow sensors and transmitters for industrial applications

Type SI thermal flow sensors 52 - 57
Type SI thermal flow transmitters 56 - 57
Type SL / airflow thermal sensors 58 - 59
Type SF / VS3000 thermal flow sensors 60 - 65

Special application



Flow sensors for hygienic areas and viscous media

Type SI thermal flow sensors 66 - 67



Flow sensors for hazardous areas

Type SF / VS2000 thermal flow sensors 68 - 71

Universal application



Flow meters for industrial applications

Type SD compressed air / consumed quantity meter 72 - 75
Type SU ultrasonic flow rate meters 76 - 77

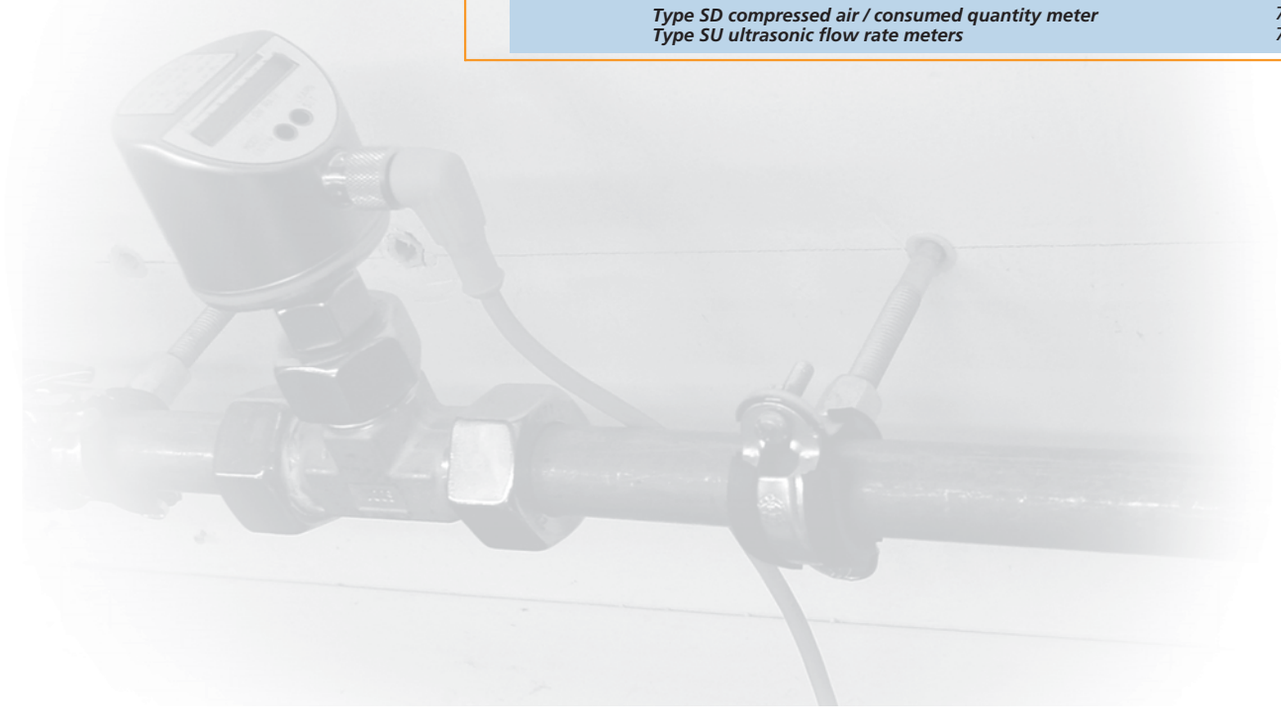

Introduction

In almost all fields of process and plant engineering liquids or gases are used for coolant and lubricant supply of machines and aggregates, ventilation of installations and buildings and the processing of products. Even the product itself may be the medium which is to be monitored permanently. In case of no flow of these media considerable damage and downtime may result. Thus it is very important to monitor that these media are at the right place at the right time and in sufficient quantities. In modern installations electronic flow monitors are used for this purpose. They work without wear and tear and without mechanical components. This guarantees reliable monitoring even in case of difficult media over a long period.

Electronic sensor: Wear-free monitoring of flow.

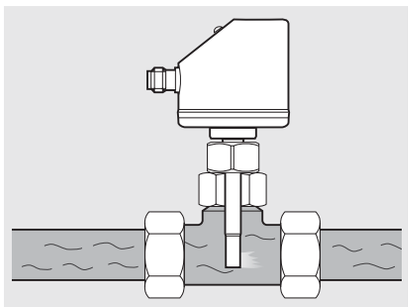

Use of flow monitors for monitoring seal water on pumps.



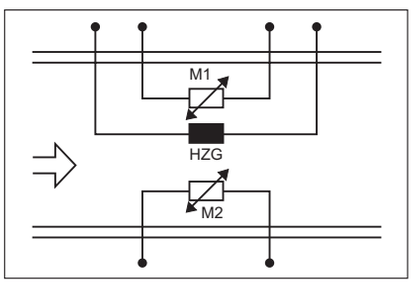

Principle of the transducer: Two temperature-dependent measuring elements (M1 / M2) and a heat source (HZG).

Operating principle

Many applications require a simple binary flow monitoring. This means that the states "medium flowing" and "medium not flowing" or value below or above a defined threshold must be detected safely.

Electronic flow monitors operating on the basis of the calorimetric principle are perfectly suited for this. They use the physical effect that a flowing medium absorbs heat energy and conducts it away. The sensor tip contains two temperature-dependent measuring elements as well as a heat source. The heat source generates a local temperature rise in the medium which is detected by one of the measuring elements. If the medium flows, energy is conducted away from the heat source, i.e. it is cooled. The resulting temperature change is an indication of flow.

To avoid a falsification of the result of the measurement by a change in the medium temperature, a second measuring element is used for temperature compensation. The difference in the measured values of the measuring elements results in the signals "medium flowing" or "medium not flowing" being provided by the control monitor after comparison with the set preset and limit values.

Sudden high temperature changes of the medium can only be compensated for within the data given in the data sheet. In order to avoid a temporarily false output signal, these values should not be exceeded.

As these systems work without any mechanically moved parts the user can mount them independent of mounting position and flow direction. For certain applications and environments preferred positions are recommended.

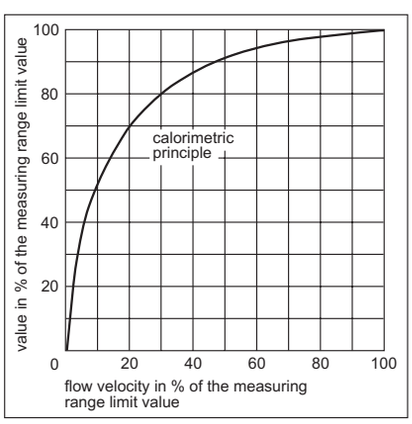

Preferred applications: The system is particularly sensitive in the area of low flow.

Visit our website: www.ifm-electronic.com

Due to the steep curve at low flow velocities the calorimetric system is especially suited for a precise and fast detection of flow and no flow in this range. The temperature gradient and the heat conductivity of the medium have less influence on the heat dissipation at the sensor tip and the switching characteristics of the sensor than in the area of the flat curve. This feature of the calorimetric flow monitor is of significance when selecting the switch point or the threshold value: In order to obtain a stable switch point and a low switching hysteresis with reference to the flow velocity, it is preferable to set a switch point at a slow flow velocity. In the technical data sheets this area is stated as "Greatest sensitivity setting".

Stable switch point: Low switching hysteresis at low flow velocity.

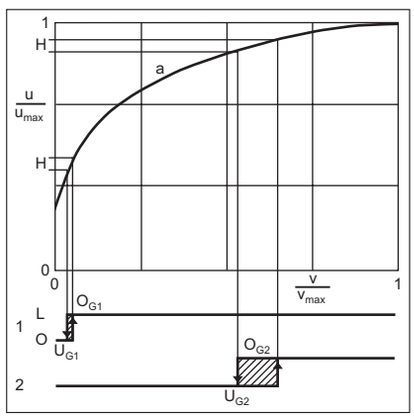

Flow sensors for separate control monitor

ifm flow sensors type SF are intended for connection to a separate control monitor type VS3000. Flow sensor and control monitor, together form the flow monitor. This flow monitor can be used for monitoring liquids and gases.

The units for separate control monitor are preferably used where environmental conditions and regulations do not permit local installation of the control monitor – such as for high medium temperatures and operating temperatures or where space is at a premium.

The sensors consist of a one-piece stainless steel or titanium housing with integrated PTCs and heat source. The sensors can be connected to different process connections via adapters which are available as accessories. The sensors are connected to the control monitor via a fixed cable connection or connector. The control monitor is available as a housing to be mounted on a rail.

Apart from the power supply it contains the voltage regulator and evaluation of the sensing circuit, the output circuits, the adjustment potentiometer for the switch point as well as an 11-digit coloured LED display for flow indication.

Using the control monitor it is also possible to monitor the medium temperature. With a potentiometer the user can set a temperature threshold value with another output signal being given when the medium temperature is exceeded. If the same flow sensor is connected to an extended control monitor, it is possible to monitor flow and temperature.

External VS3000 control monitor: The sensor becomes a flow monitor.



General information
List of articles
Level sensors
Flow sensors
Pressure sensors
Temperature sensors
Diagnostic systems
Evaluation systems, power supplies
Connection technology
Accessories
Technical information and customer service

For safety applications wire break monitoring of the cable from the sensor to the control monitor is included. In the case of a failure a separate output signal (normally closed circuit) is given. The output signals of the control monitors are passed on for further processing via floating relay contacts. Faults are indicated by a red LED on the front face. All control monitors are available for various supply voltages.

Very small flow quantities in the ml range can also be monitored by using flow adapters which are available as accessories.

To cover the large field of applications, sensors are available for high medium temperatures, high pressures, aggressive media as well as for applications in hazardous areas.



Compact flow monitor: Sensors of type SI5000.

Flow monitoring in hazardous areas

The sensors and control monitors for flow monitoring in hazardous areas meet the requirements of the directive 94/9/EC (ATEX) as well as the applicable standards and requirements of intrinsic safety "i".

The flow sensors are rated for medium temperatures of -20°C...60 °C and a pressure of 30 bar for sensors of the category 2 G and 300 bar for sensors of the category 1/2 G. They are tested for installations with explosive gas / air or vapour / air mixtures at pressures of 0.8 bar to 1.1 bar and for mixture temperatures of -20 °C...60°C.

At higher pressures the explosion limit of the medium shifts and must be assessed and approved by the user.

The sensors can be mounted in pipes with higher pressure if the flammable media do not form explosive mixtures at that pressure, as determined by the user together with the respective authorities. The markings are indicated in the data sheets and operating instructions.

Flow monitors with integrated control monitor

The compact SI flow monitor combines flow sensor and control monitor in one unit. This offers a high degree of functionality, simple handling and flexible process connection options. This compact and space-saving version is suitable for use in both liquid and gaseous media. The wetted parts of the sensor are made of stainless steel (316S12) and can be rated for several pressure ranges.

Another version enables process connection by means of a special ifm thread which can be screwed into the process connections which are common in hygienic and sterile areas. This solution is tested and certified to EHEDG.

Flow sensors for use in harzardous areas.



Process connection: The adapter enables easy integration of the flow monitor in the installation.



Visit our website: www.ifm-electronic.com

Programming and adjustment of the sensor are done via pushbuttons. The 10-digit LED bar display allows local indication of the flow range and the programmed switch points. The sensor has a "Learn" button allowing simple and quick setup. By briefly pressing this button the sensor "learns" the present flow conditions and stores them as the nominal flow. Zero flow (or a non-zero, minimum flow) can also be stored in the same way.

The LED bar display indicates the selected monitoring range. The factory preset switch point can be changed within this selected range as desired.

When the flow is above or below the selected range, this is indicated by flashing of the right or left LED. Another setting option enables the monitoring of excessive flow.

For applications where a fast flow change must be monitored another monitor version has an additional menu option for setting both the switch-on and the switch-off points. Flow changes can then be confirmed after 1 second within the flow range. All settings performed can be protected via an electronic lock. Versions with analogue output, AC supply and two switching outputs complete the range.

Airflow monitoring

Designed for monitoring airflows in ventilation systems the ifm airflow monitor type SLG is a reliable and inexpensive alternative for mechanical flaps and pressure cells.
Sensor, evaluation electronics, output relay, setting potentiometer, LEDs as well as a timer that serves as a switch-on delay for the fan or ventilator are incorporated in a smooth cylindrical plastic housing.

The switch-on delay is indicated by means of a simultaneous lighting of the two LEDs. During this time the output relay is energised and the contact is closed. The switch point can be set continuously with the potentiometer. A red or green LED indicates flow below or above the nominal value.
In the case of no flow the red LED lights, the output relay is deenergised, the relay contact is open. When the airflow monitor detects flow the green LED lights and the relay contact is closed. The output signal is available as a volt-free NO contact.

The length of the airflow monitor allows a maximum immersion of 120 mm into the air duct. It is installed in the air duct by means of the supplied mounting clamp which is secured to the duct via two self-tapping screws.
A mark on the airflow monitor housing ensures correct orientation to the airflow.

During the design of the sensor part special emphasis was put on the protection of the PTCs against mechanical destruction by solid particles in the medium. The PTCs are included in the sensor head and are protected against mechanical damage from outside by means of flush mounted metal plates. The titanium-palladium plates also provide a good heat contact to the medium. The airflow monitor can thus also be used in industrial applications without any problem.

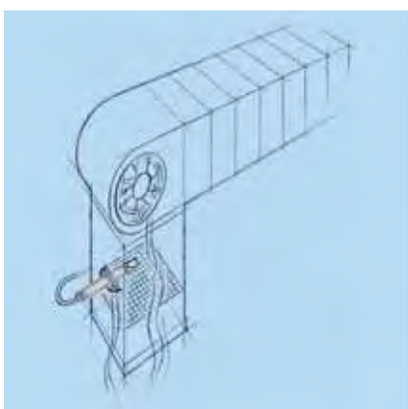

Measurement in the air duct: The airflow monitor can be used in horizontal pipes as well as in rising pipes. Only the mounting position must be in accordance with the arrow on the cap.

Thermal compressed air meter

Much success has recently been achieved as regards saving of energy, production costs and processes. It has been possible to use electricity, water, coolants and other process materials more efficiently and at reduced costs. Against this background, industry has focused in the past few years on the cost reduction as regards the use and consumption of compressed air. As it is one of the most expensive media for transferring energy used in industry, considerable cost savings and less strain on the environment are possible when it is used efficiently.

In order to find points where savings can be made the user has to know where too much energy is used and where expensively generated energy is lost due to leakages. **efector *metris*** provides a low-cost solution for the measurement of the compressed air used as well as the possibility of detecting progressive leakages.

Annual energy costs caused by leakage:						
Hole Ø [mm]	Air loss at 6 bar [l/s]	Air loss at 12 bar [l/s]	Energy loss kWh at 6 bar	Energy loss kWh at 12 bar	Costs at 6 bar [EUR]	Costs at 12 bar [EUR]
1	1.2	1.8	0.3	1.0	144	480
3	11.1	20.8	3.1	12.7	1,488	6,096
5	30.9	58.5	8.3	33.7	3,984	16,176
10	123.8	235.2	33.0	132.0	15,840	63,360

kWh x EUR 0.06 x 8,000 operating hours / year; source: www.druckluft-effizient.de

Operating principle

The compressed air meter **efector *metris*** works according to the calorimetric principle.

As a thermal measuring method it is especially suited for the measurement of volumetric flow of gaseous media. An additional correction of the measured data via pressure and temperature is not necessary in this case. The temperature of the medium is detected by means of two PT elements positioned in the air flow one of which serves as reference. The other probe which is heated additionally, is maintained at the same heat level depending on the heat loss caused by the medium flowing past it. The electrical energy needed to maintain the constant heat level is proportional to the volumetric flow of the gaseous media. The mechanical design of the measuring elements in a defined measuring pipe allows high measuring dynamics, fast response times and high sensitivity. The measured data is processed by means of state-of-the-art microprocessor technology with a variety of possibilities for signal processing. The measured data which is displayed and provided refers to standard cubic metres to DIN / ISO 2533 (1013 hPa, 15 °C, 0 % relative air humidity).

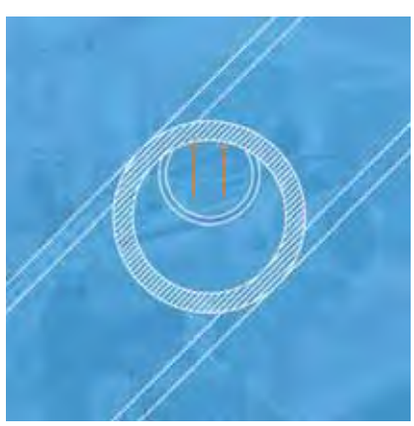

The calorimetric principle measures the standard volume flow irrespective of temperature and pressure.

Applications

Many sources including the campaign "druckluft-effizient" clearly indicate the growing interest in the optimised use of compressed air as a medium for transferring energy. There is a substantial saving potential for operating costs. **efector *metris*** helps to explore this potential.

The installation of several measuring points in the compressed air system clearly shows where and how much compressed air is consumed. The consumption can be allocated to production processes or products for optimising the cost structure.



Optimised consumption of compressed air.



Leakage monitoring.



Allocation of consumed quantities.

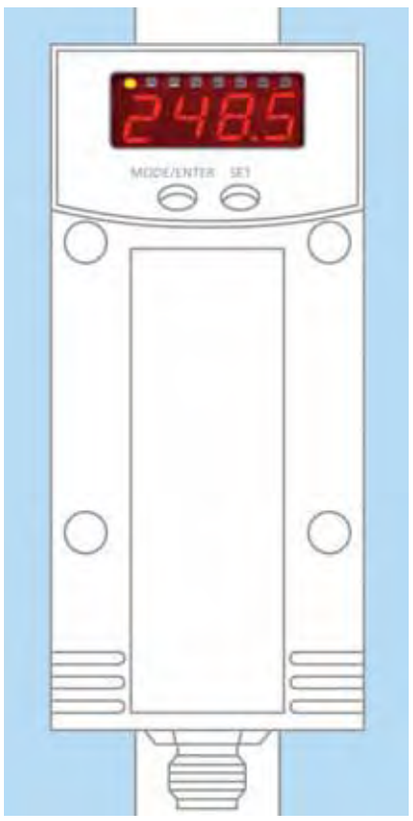

The integral 4-digit LED display plus the status LEDs allow information to be available at the point of monitoring. Whether peak consumption, present or accumulated consumption:

Set switch or alarm levels can be accessed and programmed via pushbutton. All settings can be protected using the electronic lock function.

Consumed quantity meter for special gases

A special version of **efector *metris*** detects the flow of gases in closed pipe systems. The unit can detect the volume flow of the gases argon (Ar), carbon dioxide (CO_2) or nitrogen (N_2). The integrated totaliser function allows the determination of the consumed quantities of the used gases and the retrieval of the total quantity over a certain period of time. There are other versions for the smallest quantities, too.

Ultrasonic flow rate meter

If binary monitoring of a flowing medium is sufficient and efficient for plant safety, process control and safety in many applications it is also important to know and monitor how much medium moves in what time from A to B. In this case a quantified statement about the quantity used, the consumption or the optimum quantity is required. Measurement of the flow rate on the basis of ultrasonic technology has gained increasing acceptance in the market and in applications during the past few years.

Due to its measuring characteristics this physical method is suited for the use in the following areas:



Monitoring of cooling water.



Monitoring of leaks.

Optimisation of cooling.



Exact determination of water supply.



Decentralised flow rate monitoring: Also ideal in widely branched cooling systems, e.g. welding lines. The flow rate meter SU detects very small deviations (100 ml/min) from the set flow rate, for example when leaks occur – and monitors at the same time the temperature of the cooling water. This guarantees process safety and quality.

Operating principle

Sound is the propagation and perception of pressure waves. It is the same as the perception of tones, e.g. music. In this case there is the sound emitter, the loudspeaker, and the receiver.

The ultrasonic flow rate meter type SU functions according to the transit time difference method. Two sound transducers are positioned at a defined distance in a defined pipe length. These sound transducers alternately emit sound pulses which are directed in the direction of the flow and against the direction of the flow. The pulse trains emitted with the flow in the pipe length are transported faster to the receiver by the flowing medium than the signals emitted against the direction of the flow.

The resulting transit time difference of the sound pulses enables the determination of the flow velocity and flow rate on the basis of the defined conditions like distance of sound transducer and cross-section. State-of-the-art microprocessor technologies process the measured data for display and signal processing.

Visit our website: www.ifm-electronic.com

The flow rate meter type SU is an inline flow rate meter. The propagation time of the sound depends to a large extent on the medium (gaseous, liquid). Therefore information about the type of medium must be given to the measuring system so that the respective correction factors can be included.

In addition to simple flow rate monitoring the SU also monitors the temperature of the medium. It is displayed on site and provided for signal processing. This makes the system particularly suitable for the monitoring of cooling circuits, because temperature and flow rate can be monitored at the same time.

The processed information for integration into the process and further processing is of course important for the user. The SU provides a variety of possibilities for representing and processing the data.

In addition to the display of all settings and process data on site there are also various possibilities of signal processing. If continuous documentation of processes is required the measured values are available via analogue outputs (0...10 V / 4...20 mA).

Binary evaluation of measured values is part of the standard. Pulse outputs for counting and totaliser functions are available internally as well as externally. There is also the possibility to allocate an output to the function of a preset counter. In this case a switched signal is provided after a preset flow rate. The operating principle is similar to that of an electronic water meter. A compact design which is ready for connection and can be adapted to various process connections enables the SU ultrasonic flow rate meter to be used in a wide range of applications.

All functions described here can be set directly on site via alphanumeric menu navigation, but they can also be set before installation.

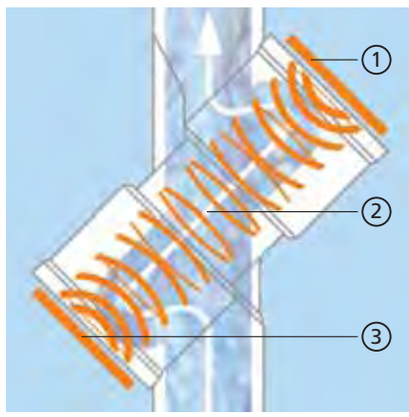

1. Piezoceramic sound transducer
2. Measuring length
3. Piezoceramic sound transducer
Differential transit time principle: Sound pulses are alternately emitted and detected in and against the direction of flow using piezoceramic sound transducers. The flow rate is exactly calculated from the difference of the transit time (in the nanosecond range from 0.5 to 500 ns). Reliably, wear-and maintenance-free.



Four-digit alphanumeric display for information on site: Current flow rate, accumulated total quantity and medium temperature. l/min or m^3/h can be selected as the unit of measurement. Two LEDs indicate the switch points.

Housing / Process connection		Application / Flow range [cm/s]	Medium temperature [°C]	Supply voltage DC	Supply voltage AC	Appli-cation	Sensor material Stainless steel Page	Sensor material Titanium Page	Sensor material PTFE Page
Thermal flow sensors and transmitters with integrated control monitor									
type SI5... 	sealing cone fitting adapter	liquids: 3...300 gases: 200...3000	-25...80	•	•	●	52 / 54	–	–
type SI6... 	ifm adapter thread	liquids: 3...300 gases: 200...3000	-25...95 -25...120*	•	–	○	66	–	–
type SLG 	mounting clamp	air: 100...1000	-10...50	•	•	●	–	–	58
Thermal flow sensor with integrated control monitor for flow and temperature detection									
type SI5... 	sealing cone fitting adapter	liquids: 3...300 gases: 200...3000	-25...80	•	–	●	56	–	–

* max. 1 hour at 60 °C operating temperature

For industrial applications

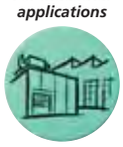

For hygienic areas and viscous media



For hazardous areas



Housing / Process connection		Application / Flow range [cm/s]	Medium temperature [°C]			Appli-cation	Sensor material		
			-20...60	-20...80	0...120		Stainless steel Page	Titanium Page	Ceramic Page
Thermal flow sensors with external control monitor									
type SF Ex-i 	M12 x 1	liquids: 3...300 gases: 2...2000	•	–	–	●	68	–	–
type SF Ex-i 	G 1/4	liquids: 0...300 gases: 2...2000	•	–	–	●	68	–	–
type SF Ex-i 	G 1/2	liquids: 0...300 gases: 2...2000	•	–	–	●	68	–	–
type SF 	sealing cone fitting adapter	liquids: 3...300 gases: 200...3000	–	•	–	●	61	61	–
type SF 	sealing cone fitting adapter	liquids: 3...300 gases: 200...3000	–	–	•	●	61	61	–
type SF Ex-i 	M12 x 1	liquids: 3...300 gases: 200...3000	•	–	–	●	68	–	–
type SF Ex-i 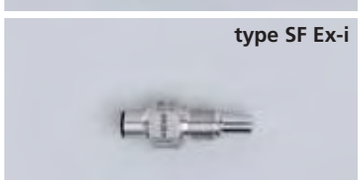	G 1/4	liquids: 3...300 gases: 200...3000	•	–	–	●	68	–	68
type SF Ex-i 	G 1/2	liquids: 3...300 gases: 200...3000	•	–	–	●	68	–	–

For industrial applications

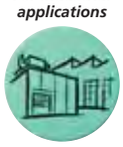

For hygienic areas and viscous media



For hazardous areas



Housing / Process connection		Application / Flow range	Medium temperature [°C]			Appli-cation	Sensor material		
		[cm/s]	-20...60	-20...80	0...120		Stainless steel Page	Titanium Page	Ceramic Page
Thermal flow sensors with external control monitor									
type SF (ceramic) 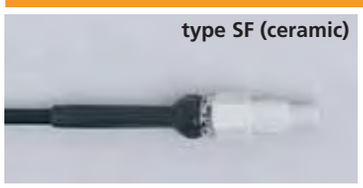	G 1/4	liquids: 0...60	–	•	–	●	–	–	63
type SF (ceramic) 	G 1/2	liquids: 0...60	–	•	–	●	–	–	63
type SF (ceramic) 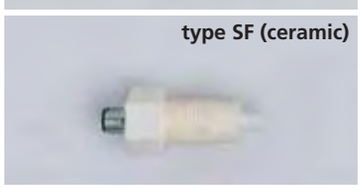	G 1/2	liquids: 0...60	–	•	–	●	–	–	63
type SF (ceramic) 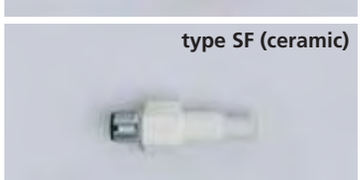	G 1/4	liquids: 0...60	–	•	–	●	–	–	63

For industrial applications

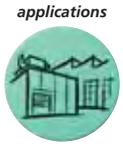

For hygienic areas and viscous media



For hazardous areas



Housing / Dimensions [mm]		Monitoring			Appli-cation	DC Page	AC Page
		Flow	Flow / Temperature	Flow / Wire			
Control monitors							
type VS3000 	25 x 103.5 x 100	•	•	•	●	64	64
type VS0200 Ex-i 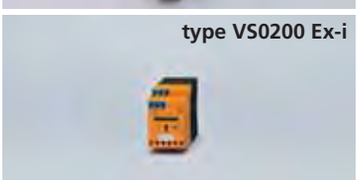	55 x 75 x 110	–	–	•	●	70	70

For industrial applications

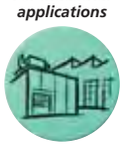

For hygienic areas and viscous media



For hazardous areas



Housing / Process connection [mm]		Measuring principle	Measuring range Nm³ / h Nl / min	Supply voltage DC	Supply voltage AC	Appli-cation	Medium-tempe-rature [°C]	Medium	Page
Thermal compressed air meters									
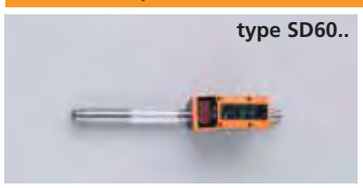 **type SD60..**	DN 15	thermal	0.25...75.0 4...1,250	•	–	●	0...60	com-pressed air / gases	72
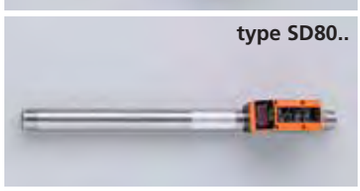 **type SD80..**	DN 25	thermal	0.75...225.0 12.5...3,750	•	–	●	0...60	com-pressed air / gases	72
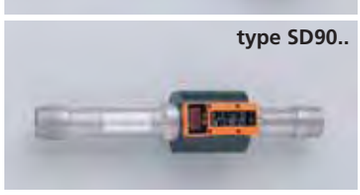 **type SD90..**	DN 40	thermal	1.8...410 30...6,830	•	–	●	0...60	com-pressed air / gases	72
 **type SD20..**	DN 50	thermal	2.3...700 390...11,670	•	–	●	0...60	com-pressed air / gases	72
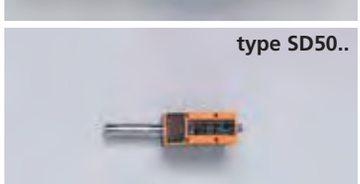 **type SD50..**	DN 8	thermal	0.06...15.00 0.88...250.0	•	–	●	0...60	com-pressed air / gases	74
Consumed quantity meter for gases									
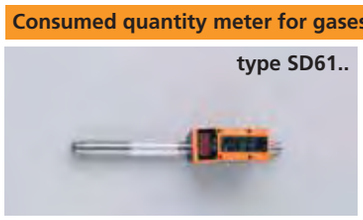 **type SD61..**	DN 15	thermal	Ar: 0.35... 105 / – CO_2: 0.22... 65 / – N_2: 0.23... 67.5 / –	•	–	●	0...60	Ar CO_2 N_2	74
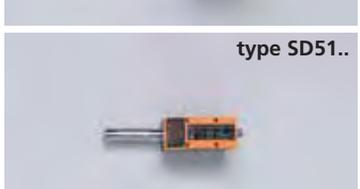 **type SD51..**	DN 8	thermal	Ar: 0.08... 24.54 / – CO_2: 0.047... 14.38 / – N_2: 0.05... 14.94 / –	•	–	●	0...60	Ar CO_2 N_2	74

For industrial applications

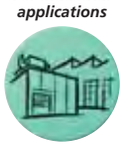

For hygienic areas and viscous media



For hazardous areas



Housing / Process connection [mm]		Measuring principle	Measuring range l / min	Supply voltage DC	Supply voltage AC	Appli-cation	Medium-tempe-rature [°C]	Medium	Page
Ultrasonic flow rate meters									
type SU7... 	R 1/2	ultrasonic	0...50	•	–	●	0...80	water / liquids	77
type SU8... 	R 1/2 R 3/4	ultrasonic	0...100	•	–	●	0...80	water / liquids	77

For industrial applications

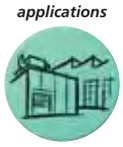

For hygienic areas and viscous media



For hazardous areas



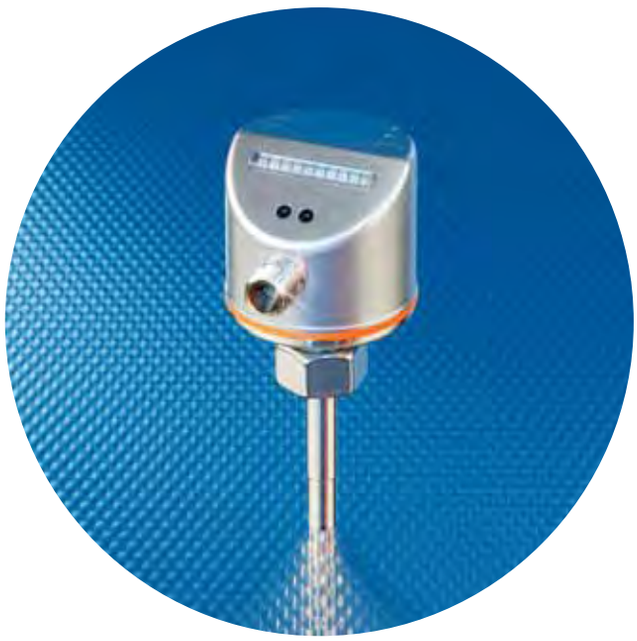

All SI5xxx versions in the same design.

- **Increased repeatability across the extended measuring range.**
- **Simplified setting mode for quick set-up.**
- **AC and DC version.**
- **Reliable monitoring of gaseous and liquid media.**
- **Electronic locking of the setting values.**



Accessories

Type	Description	Order no.
	Adapter M18 x 1.5 - L18 for mounting in T-pieces	**E40104**
	Adapter, M18 x 1.5 - G 1/2	**E40096**
	Welding adapter, M18 x 1.5 - Ø 24 mm	**E40124**
	Flow adapter (for low flow rates), M12 x 1 - G 1/8	**E40129**

Connectors and splitter boxes

Type	Description	Order no.
	Socket, M12, Group 7 2 m black, PUR cable	**EVC004**
	Socket, M12, Group 7 5 m black, PUR cable	**EVC005**
	Socket, M12, Group 7 2 m black, PUR cable	**EVC001**
	Socket, M12, Group 7 5 m black, PUR cable	**EVC002**
	Socket, M12 2 m black, PUR cable	**E10909**
	Socket, M12 5 m black, PUR cable	**E10910**
	Socket, M12 2 m black, PUR cable	**E10915**
	Socket, M12 5 m black, PUR cable	**E10916**

Further accessories are available starting on page 217

Further connectors and splitter boxes are available starting on page 191

	For industrial applications	SI thermal flow sensors / transmitters	SL thermal airflow sensors	SF / VS3000 thermal flow sensors	For hygienic areas and viscous media	SI thermal flow sensors / transmitters	For hazardous areas	SF / VS2000 Ex thermal flow sensors
Flow sensors and transmitters			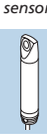	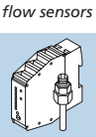				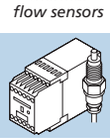
Page		52 - 57	58 - 59	60 - 65		66 - 67		68 - 71

Approvals: cULus

Setting range liquids / gases [cm/s]	Greatest sensitivity [cm/s]	Medium-temperature [°C]	Response time [s]	U_b / tolerance [V] / [%]	Current / Power consump.	I_{load} [mA]	Draw-ing no.	Order no.
M12 connector · Output function ⎓ / ⏦ · Connector groups 7, 8, 10 · Wiring diagram no. 5								
3...300 / 200...3000	3...100 / 200...800	-25...80	1...10	19...36 DC	< 60	–	1	**SI5000**
M12 connector · Output function 2 x ⎓ / ⏦ · Connector groups 7, 8, 10 · Wiring diagram no. 6								
3...300 / 200...3000	3...100 / 200...800	-25...80	1...10	19...36 DC	< 60	–	1	**SI5002**
1/2" UNF-Connector · Output function ⎓ / ⏦ · Connector group 29 · Wiring diagram no. 7								
3...300 / 200...3000	3...60 / 200...800	-25...80	1...10	85...265 AC / -5 / +10	–	< 3.5	2	**SI1006 ***

* Note for AC and AC/DC units

Miniature fuse to IEC60127-2 sheet 1, ≤ 5A (fast acting). Recommendation: check the unit for reliable function after a short circuit.

Common technical data

Pressure rating: 30 bar (SI5006: 300 bar)
Power-on delay time: 10 s
Short-circuit and overload protection
Housing material: stainless steel (304S15); PC (Makrolon); PBT-GF 20; EPDM/X (Santoprene)
Sensor material: stainless steel (316S12)
Operating temperature: -25...80 °C
Switch point adjustment: automatically via pushbutton or programming wire P
Max. temperature gradient 300 K / min.
Function display: 10 LEDs

You can find scale drawings from page 239

For industrial applications

SD compressed air / consumed quantity meter

SU ultrasonic flow rate meters

Flow meters





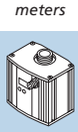

72 - 75

76 - 77

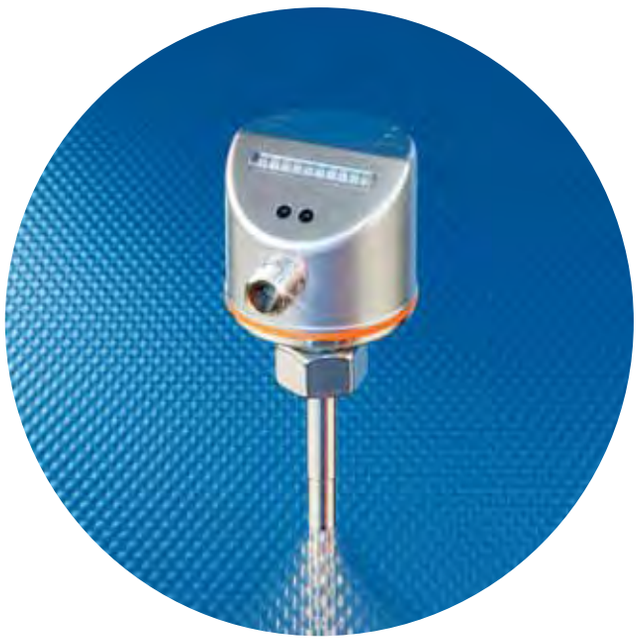

All SI5xxx versions in the same design.

- **300 bar pressure rating.**
- **Fast response times.**
- **Increased repeatability across the extended measuring range.**
- **Simplified setting mode for quick set-up.**
- **Reliable monitoring of gaseous and liquid media.**









Accessories

Type	Description	Order no.
	Adapter M18 x 1.5 - L18 for mounting in T-pieces	E40104
	Adapter, M18 x 1.5 - G 1/2	E40096
	Welding adapter, M18 x 1.5 - Ø 24 mm	E40124
	Flow adapter (for low flow rates), M12 x 1 - G 1/8	E40129

Connectors and splitter boxes

Type	Description	Order no.
	Socket, M12, Group 7 2 m black, PUR cable	EVC004
	Socket, M12, Group 7 5 m black, PUR cable	EVC005
	Socket, M12, Group 7 2 m black, PUR cable	EVC001
	Socket, M12, Group 7 5 m black, PUR cable	EVC002
	Socket, M12 2 m black, PUR cable	E10909
	Socket, M12 5 m black, PUR cable	E10910
	Socket, M12 2 m black, PUR cable	E10915
	Socket, M12 5 m black, PUR cable	E10916

Further accessories are available starting on page 217

Further connectors and splitter boxes are available starting on page 191

	For industrial applications	SI thermal flow sensors / transmitters	SL thermal airflow sensors	SF / VS3000 thermal flow sensors	For hygienic areas and viscous media	SI thermal flow sensors / transmitters	For hazardous areas	SF / VS2000 Ex thermal flow sensors
Flow sensors and transmitters			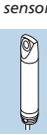	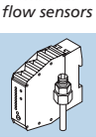				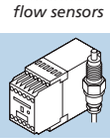
Page		52 - 57	58 - 59	60 - 65		66 - 67		68 - 71

Approvals: cULus
SI5010: particularly fast switching

Setting range liquids / gases [cm/s]	Greatest sensitivity [cm/s]	Medium-temperature [°C]	Response time [s]	U_b / tolerance [V] / [%]	Current / Power consump.	I_{load} [mA]	Draw-ing no.	Order no.
M12 connector · Output function ⎍ / ⎍ · Connector groups 7, 8, 10 · Wiring diagram no. 5								
3...300 / 200...3000	3...100 / 200...800	-25...80 / -	1...2 *	19...36 DC	< 60	–	3	**SI5010**

Common technical data

Power-on delay time: 10 s
Short-circuit and overload protection
Housing material: stainless steel (304S15); PC (Makrolon); PBT-GF 20; EPDM/X (Santoprene)
Sensor material: stainless steel (316S12)
Operating temperature: -25...80 °C
Switch point adjustment via pushbutton
Function display LED 10
Max. temperature gradient: 300 K / min
* for liquids and temperature gradient 1 K/min. For gases: 1...10

You can find scale drawings from page 239

For industrial applications

SD compressed air / consumed quantity meter

SU ultrasonic flow rate meters

Flow meters





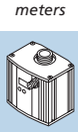

72 - 75

76 - 77

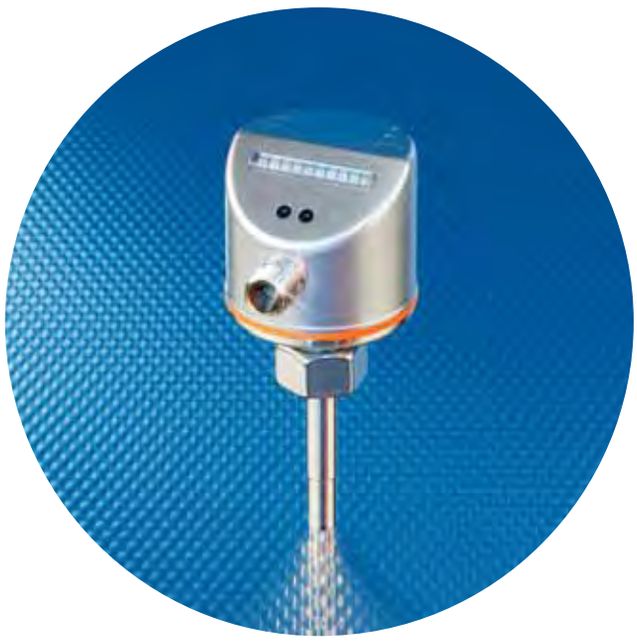

All SI5xxx versions in the same design.

- **Increased repeatability across the extended measuring range.**
- **Switching output for flow and temperature.**
- **Output function NC/NO programmable or analogue (4...20 mA).**
- **LED bar graph for indication of switch point and flow.**

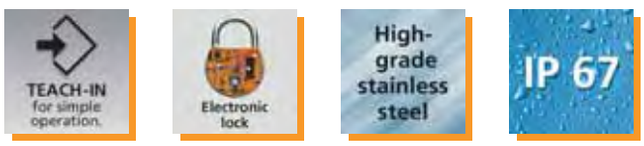

Accessories

Type	Description	Order no.
	Adapter M18 x 1.5 - L18 for mounting in T-pieces	**E40104**
	Adapter, M18 x 1.5 - G 1/2	**E40096**
	Welding adapter, M18 x 1.5 - Ø 24 mm	**E40124**
	Flow adapter (for low flow rates), M12 x 1 - G 1/8	**E40129**

Connectors and splitter boxes

Type	Description	Order no.
	Socket, M12, Group 7 2 m black, PUR cable	**EVC004**
	Socket, M12, Group 7 5 m black, PUR cable	**EVC005**
	Socket, M12, Group 7 2 m black, PUR cable	**EVC001**
	Socket, M12, Group 7 5 m black, PUR cable	**EVC002**
	Socket, M12 2 m black, PUR cable	**E10909**
	Socket, M12 5 m black, PUR cable	**E10910**
	Socket, M12 2 m black, PUR cable	**E10915**
	Socket, M12 5 m black, PUR cable	**E10916**

Further accessories are available starting on page 217

Further connectors and splitter boxes are available starting on page 191

	For industrial applications	*SI thermal flow sensors / transmitters*	*SL thermal airflow sensors*	*SF / VS3000 thermal flow sensors*	*For hygienic areas and viscous media*	*SI thermal flow sensors / transmitters*	*For hazardous areas*	*SF / VS2000 Ex thermal flow sensors*
Flow sensors and transmitters			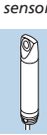	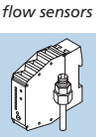				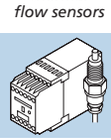
Page		*52 - 57*	*58 - 59*	*60 - 65*		*66 - 67*		*68 - 71*



SI5007: Flow monitoring and temperature monitoring
SI5004: Analogue output
Approvals: cULs

Setting range liquids / gases [cm/s]	Greatest sensitivity [cm/s]	Medium-temperature [°C]	Response time [s]	U_b [V]	Current consumption	I_{load} [mA]	Draw-ing no.	Order no.
M12 connector · Output function 2 x ⎓ / ⎓ · Connector groups 7, 8, 10 · Wiring diagram no. 6								
3...300 / 200...3000	3...100 / 200...800	-25...80	1...10	19...36 DC	< 60	2 x 250	1	**SI5007**
M12 connector · Output function 4...20 mA analogue · Connector groups 7, 8, 10 · Wiring diagram no. 8								
3...300 / -	3...100 / -	-25...80	1...10	19...36 DC	< 60	–	1	**SI5004**

Common technical data

Pressure rating: 30 bar
Power-on delay time: 10 s
Short-circuit and overload protection
Housing material: stainless steel (304S15); PC (Makrolon); PBT-GF 20; EPDM/X (Santo-prene)
Sensor material: stainless steel (316S12)
Operating temperature: -25...80 °C
Temperature gradient 300 K / min. (SI5007)
Function display: 10 LEDs

You can find scale drawings from page 239



- **Airflow monitoring up to 10 m/s.**
- **LED indicating readiness for operation and flow.**
- **Signal output via relay.**
- **AC and DC version.**
- **Compact design, cylindrical.**







Accessories

Type	Description	Order no.
	Mounting clamp Ø 23 mm for air flow monitor SLG	**E40048**

Description

Designed for monitoring air flows in ventilation systems this airflow monitor type SLG based on the calorimetric principle is an inexpensive alternative for mechanical flaps and pressure cells. The smooth cylindrical plastic housing incorporates sensor, control monitor, output relay, LEDs, adjustment potentiometer as well as a timer. This timer serves as a switch-on delay for the fan or ventilator. The different operating states are indicated by the LEDs. The output signal is available as a floating NO contact. The airflow monitor is installed by means of a special mounting clamp. The length of the unit allows a maximum immersion of 120 mm into the air duct.

Further accessories are available starting on page 217

	For industrial applications	*SI thermal flow sensors / transmitters*	*SL thermal airflow sensors*	*SF / VS3000 thermal flow sensors*	*For hygienic areas and viscous media*	*SI thermal flow sensors / transmitters*	*For hazardous areas*	*SF / VS2000 Ex thermal flow sensors*
Flow sensors and transmitters			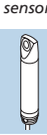	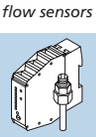				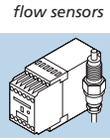
Page		*52 - 57*	*58 - 59*	*60 - 65*		*66 - 67*		*68 - 71*



AC/DC version
Set-up LED
PPU cable, 2 m

Setting range [cm/s]	Greatest sensitivity [cm/s]	Medium temperature [°C]	U_b / tolerance [V] / [%]	Current consumption [mA]	Power consumption [VA]	Draw-ing no.	Order no.
Cable 2 m · Output function relay energised when flow is present · Wiring diagram no. 9							
100...1000	100...400	-10...50	80...250 AC/DC	–	3	4	**SL0101 ***
Cable 2 m · Output function relay energised when flow is present · Wiring diagram no. 10							
100...1000	100...400	-10...50	24 AC	–	1.5	4	**SL0201**
Cable 2 m · Output function relay energised when flow is present · Wiring diagram no. 11							
100...1000	100...400	-10...50	24 DC ± 25 %	–	1	4	**SL5101**

* Note for AC and AC/DC units

Miniature fuse to IEC60127-2 sheet 1, ≤ 5A (fast acting). Recommendation: check the unit for reliable function after a short circuit.

Common technical data

Pressure rating: 1 bar
Power-on delay time: 60 s
Material housing: pocan / titanium
Response time: 3...60 s
Operating temperature: -10..50 °C
Switch point adjustment: via pot
Function display: 1 x red, 1 x green
Max. relative air humidity: 90 %
Switching power relays: 3 A / 250 V AC

You can find scale drawings from page 239

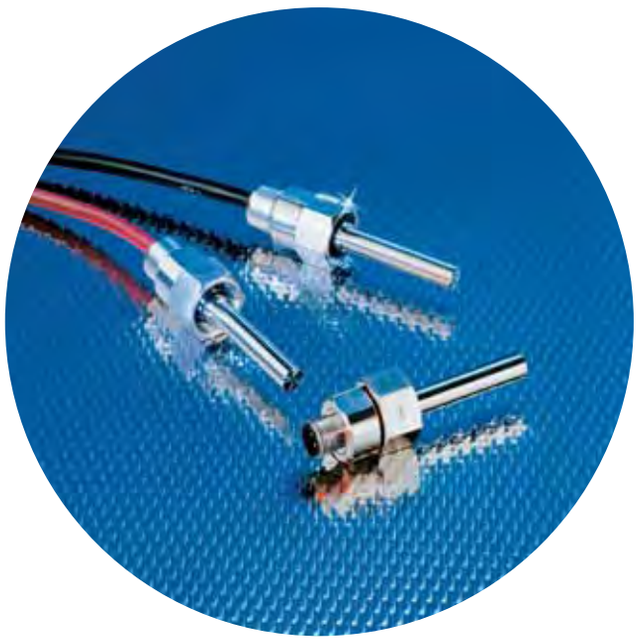

Connector and cable versions
for the connection to VS3000 control monitors.

- **Suitable for liquids and gases.**
- **Optional fittings for flexible process connection.**
- **One-piece metal housing, resistant to aggressive media.**
- **Up to 120 °C medium temperature in liquids.**
- **Connector and cable versions.**









Accessories

Type	Description	Order no.
	Adapter M18 x 1.5 - L18 for mounting in T-pieces	**E40104**
	Adapter, M18 x 1.5 - G 1/2	**E40096**
	Welding adapter, M18 x 1.5 - Ø 24 mm	**E40124**
	Flow adapter (for low flow rates), M12 x 1 - G 1/8	**E40129**

Connectors and splitter boxes

Type	Description	Order no.
	Socket, M12, 5-pole 2 m black, PUR cable	**EVC073**
	Socket, M12, 5-pole 5 m black, PUR cable	**EVC074**
	Socket, M12, 5-pole 10 m black, PUR cable	**EVC075**
	Socket, M12 2 m black, PUR cable	**E10957**
	Socket, M12 5 m black, PUR cable	**E10958**
	Socket, M12 10 m black, PUR cable	**E10959**

Further accessories are available starting on page 217

Further connectors and splitter boxes are available starting on page 191

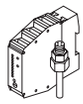

Connection to control monitor
Connector and cable version
High pressure and high temperature

Setting range liquids / gases [cm/s]	Greatest sensitivity [cm/s]	Medium temperature [°C]	Response time [s]	Max. T_0 gradient [K/min]	Pressure rating [bar]	Material	Draw-ing no.	Order no.
M12 connector · Connector groups 11, 12 · Wiring diagram no. 12								
3...300 / 200...3000	3...60 / 200...800	-25...80	1...10	300	300	stainless steel	5	**SF5200**
Cable · Wiring diagram no. 13								
3...300 / 200...3000	3...60 / 200...800	-25...80	1...10	300	300	stainless steel	6	**SF5350**
3...300 / 200...3000	3...60 / 200...800	0...120 / 0...100	1...10	300	300	stainless steel	6	**SF5300**
M12 connector · Connector groups 11, 12 · Wiring diagram no. 12								
3...300 / 200...3000	3...60 / 200...800	-25...80	1...10	300	300	titanium (3.7035)	5	**SF5700**
Cable · Wiring diagram no. 13								
3...300 / 200...3000	3...60 / 200...800	0...120 / 0...100	1...10	300	300	titanium (3.7035)	6	**SF5800**

For evaluation units please see page 64.

Common technical data

Cable: 6 m / 5 x 0.34 mm,
silicone-sheathed or PUR cable
Max. cable length: 100 m / 5 x 0.5 mm
Protection: IP 67

You can find scale drawings from page 239



Connector and cable versions
for the connection to VS3000 control monitors.

- **Full ceramic one-piece housing (aluminium oxide, 99.9 %).**
- **Sensors with process connection via G 1/4 and G 1/2 male thread.**
- **Cable and connector variants.**
- **Evaluation and signalling of flow and wire break.**





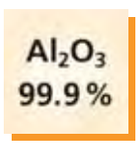



Connectors and splitter boxes

Type	Description	Order no.
	Socket, M12, 5-pole 2 m black, PUR cable	**EVC073**
	Socket, M12, 5-pole 5 m black, PUR cable	**EVC074**
	Socket, M12, 5-pole 10 m black, PUR cable	**EVC075**
	Socket, M12 2 m black, PUR cable	**E10957**
	Socket, M12 5 m black, PUR cable	**E10958**
	Socket, M12 10 m black, PUR cable	**E10959**

Further connectors and splitter boxes are available starting on page 191

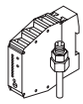

Sensors for connection to amplifier
For aggressive liquids
Types G 1/4 (SF24xx) and G 1/2 (SF34xx), protection rating IP 67

Setting range liquids / gases [cm/s]	Greatest sensitivity [cm/s]	Medium temp. [°C]	Response time [s]	Max. T_0 gradient [K/min]	Pressure rating [bar]	Material	Draw-ing no.	Order no.
M12 connector · Connector groups 11, 12 · Wiring diagram no. 12								
3...60 / -	3...40 / -	5...70 / -	2...20	7	30	ceramics *	7	**SF2405**
3...60 / -	3...40 / -	5...70 / -	2...20	7	30	ceramics *	8	**SF3405**
Cable · Wiring diagram no. 13								
3...60 / -	3...40 / -	5...70 / -	2...20	7	30	ceramics *	9	**SF2410**
3...60 / -	3...40 / -	5...70 / -	2...20	7	30	ceramics *	10	**SF3410**

* aluminium oxide, 99.9 %

For evaluation units please see page 64.

You can find scale drawings from page 239



Control monitors for the connection of flow sensors of the SF series.

- **Integrated flow, temperature and wire-break monitoring.**
- **Adjustable switch points for flow and temperature.**
- **Multicolour LED bar graph display for quick setting.**
- **Signal output using potential-free relay contacts (changeover contacts).**
- **Connection options: Insulation displacement / screw terminals, cage clamps.**



Accessories

Type	Description	Order no.
	Combicon connector with cage clamps 4 poles	E40171
	Combicon connector with insulation displacement terminals 4-pole	E40172

VS3000 – Three functions in one unit

The control monitors of the VS3000 series ensure high functionality in a space-saving housing for control cabinet mounting.

The connection variants (Combicon) provide flexibility for different connection concepts. In addition to flow indication via the multicolour LED bar graph, the adjustable limit temperature of the medium as well as, for safety reasons, a wire break between the sensor and the control monitor are signalled via LEDs and a relay output. The operating elements are located on the front and can be set using a screwdriver.

The control monitors are available in two versions (AC or DC) and form a system for flow monitoring together with the SF type flow sensors.

Further accessories are available starting on page 217

	For industrial applications	*SI thermal flow sensors / transmitters*	*SL thermal airflow sensors*	*SF / VS3000 thermal flow sensors*	*For hygienic areas and viscous media*	*SI thermal flow sensors / transmitters*	*For hazardous areas*	*SF / VS2000 Ex thermal flow sensors*
Flow sensors and transmitters			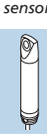	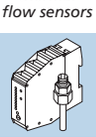				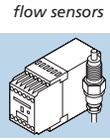
Page		*52 - 57*	*58 - 59*	*60 - 65*		*66 - 67*		*68 - 71*

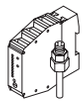

AC and DC versions
Compact housing for control cabinet mounting
Control monitor for flow sensors of the SF series

U_b / Tolerance [V] / [%]	Current consump. [mA]	Power consumption [VA]	Power-on delay time [s]	Output when flow is present	Output when temp. is exceeded	Output in case of wire break	Drawing no.	Order no.
Combicon connector · Output function ⊣⊢ · Wiring diagram no. 33								
90...240 AC / -5 /+10	–	4	10...80	relay energised	relay energised	relay de-energ.	11	**SN0150 ***
Combicon connector · Output function ⊣⊢ · Wiring diagram no. 34								
24 DC / +10 / -20	90	–	10...80	relay energised	relay energised	relay de-energ.	11	**SR0150**

* Note for AC and AC/DC units

Miniature fuse to IEC60127-2 sheet 1, ≤ 5A (fast acting). Recommendation: check the unit for reliable function after a short circuit.

You can find scale drawings from page 239

For industrial applications

SD compressed air / consumed quantity meter

SU ultrasonic flow rate meters

Flow meters





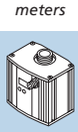

72 - 75

76 - 77

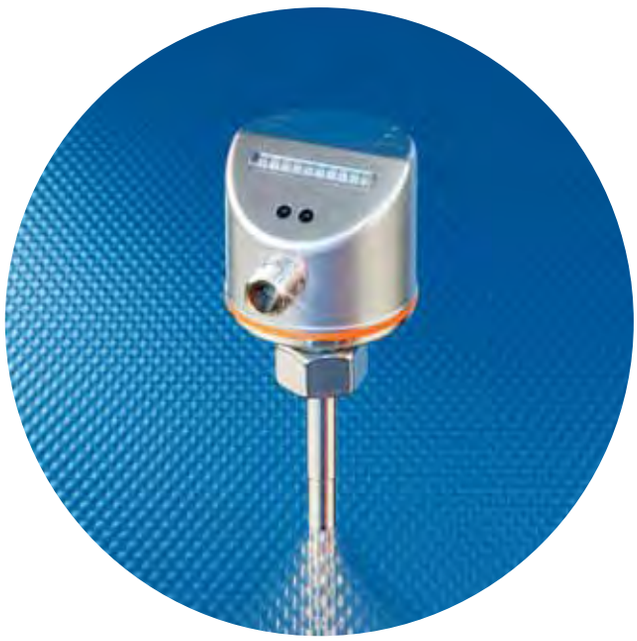

- **Prepared and tested for process fittings of hygienic areas.**
- **Medium temperatures up to 120 °C.**
- **Setting and adjustment via push-button.**
- **LED bar graph for indication of switch point and flow.**
- **Process connections available as accessories.**

Gold-plated contacts | EHEDG certified | 3 A standard | High-grade stainless steel

Accessories

Type	Description	Order no.
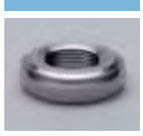	Aseptoflex adapter, DIN11851 - 1.5" / DN40	**E33012**
	Aseptoflex adapter, Varivent D68	**E33022**
	Aseptoflex adapter, Clamp 1.5"	**E33001**
	Aseptoflex adapter, Clamp 2"	**E33002**

Connectors and splitter boxes

Type	Description	Order no.
	Socket, M12, Group 58 5 m orange, PVC cable	**EVT004**
	Socket, M12, Group 58 10 m orange, PVC cable	**EVT005**
	Socket, M12, Group 58 25 m orange, PVC cable	**EVT006**
	Socket, M12, Group 58 5 m orange, PVC cable	**EVT001**
	Socket, M12, Group 58 10 m orange, PVC cable	**EVT002**
	Socket, M12, Group 58 25 m orange, PVC cable	**EVT003**

Further accessories are available starting on page 217

Further connectors and splitter boxes are available starting on page 191

	For industrial applications	*SI thermal flow sensors / transmitters*	*SL thermal airflow sensors*	*SF / VS3000 thermal flow sensors*	*For hygienic areas and viscous media*	*SI thermal flow sensors / transmitters*	*For hazardous areas*	*SF / VS2000 Ex thermal flow sensors*
Flow sensors and transmitters			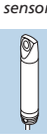	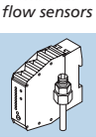				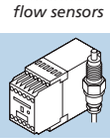
Page		*52 - 57*	*58 - 59*	*60 - 65*		*66 - 67*		*68 - 71*

Integrated microprocessor
Probe length SI6000: 55 mm, SI6100: 20 mm. SI6200: 38 mm

Setting range liquids / gases [cm/s]	Greatest sensitivity [cm/s]	Medium temperature [°C]	Temperature gradient [K / min]	U_b [V]	Current consump. [mA]	I_{load} [mA]	Draw-ing no.	Order no.
M12 connector · Output function ⎓ / ⎓ · Connector groups 58, 59, 61 · Wiring diagram no. 5								
3...300 / 200...3000	3...60 / 200...800	-25...95 (120 max. 1 h)	300	19...36	< 60	250	12	**SI6000**
3...300 / 200...3000	3...60 / 200...800	-25...95 (120 max. 1 h)	300	19...36	< 60	250	13	**SI6100**
3...300 / 200...3000	3...60 / 200...800	-25...95 (120 max. 1 h)	300	19...36	< 60	250	14	**SI6200**

Common technical data

Pressure rating: 30 bar
Power-on delay time: 10 s
Short-circuit and overload protection
Housing material / Sensor material: stainless steel (316S12)
Operating temperature: -25...80 °C
Function display: 10 LEDs
Protection: IP 67 III

You can find scale drawings from page 239

For industrial applications

SD compressed air / consumed quantity meter

SU ultrasonic flow rate meters

Flow meters





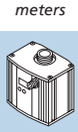

72 - 75

76 - 77

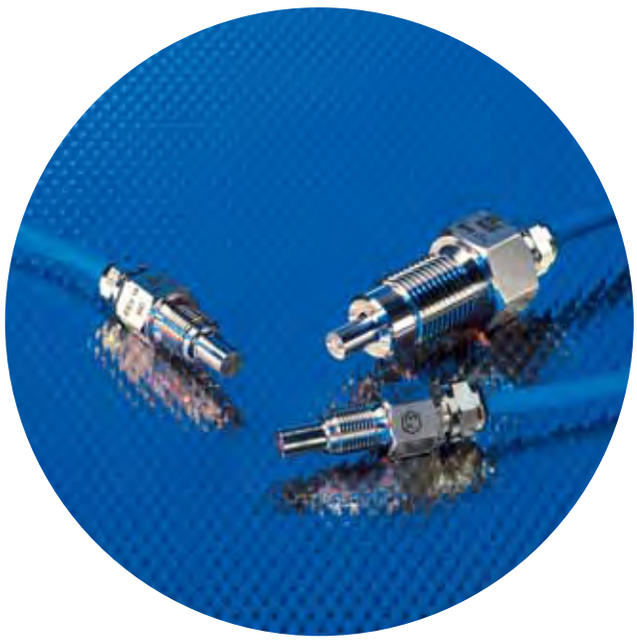

Sensors for category 1 with cable,
for category 2 with cable or connector.

- **Approved by DMT for hazardous areas category 1/2G and 2G.**
- **High-grade stainless steel (316S12) or ceramic housing (alum. oxide 99.9 %).**
- **Process connection thread M12 x 1, G 1/4 or G 1/2.**
- **Temperature class T4.**
- **Optional flow adapter for small volumetric flow quantities.**

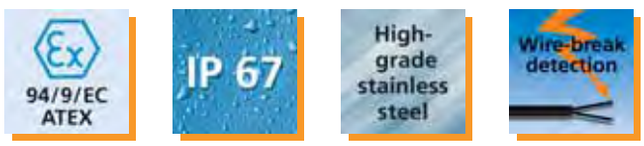

Description

Type SFx1xA sensors are used for flow monitoring in category 1 / 2 G hazardous areas, in conjunction with the control monitor VS 2000 Ex i. The sensors can be used in zone 0 of pipes and tanks, of the explosion group II A, II B and II C with the sensor tip being in category 1 (zone 0) and the housing in category 2 (zone 1). The housings are made of stainless steel (316S12) and have potted cable connection. The sensors have the temperature class T4.

Type SFx2xA sensors are used for flow monitoring in category 2 hazardous areas in conjunction with the control monitor VS 2000 Ex i. The units meet the requirements of the directive 94 / 9 / EC as well as the applicable standards and requirements of intrinsic safety "i". The electrical data and the Ex marking are stated in the data sheet, the type test certificate and the operating instructions. For further information see our website www. ifm-electronic.com.

Connectors and splitter boxes

Type	Description	Order no.
	Socket, M12, Group 67 2 m blue, PUR / PVC cable	E40075
	Socket, M12, Group 67 5 m blue, PUR / PVC cable	E40076

Further connectors and splitter boxes are available starting on page 191

	For industrial applications	*SI thermal flow sensors / transmitters*	*SL thermal airflow sensors*	*SF / VS3000 thermal flow sensors*	*For hygienic areas and viscous media*	*SI thermal flow sensors / transmitters*	*For hazardous areas*	*SF / VS2000 Ex thermal flow sensors*
Flow sensors and transmitters			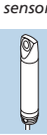	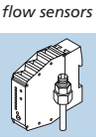				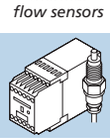
Page		*52 - 57*	*58 - 59*	*60 - 65*		*66 - 67*		*68 - 71*

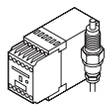

94/9/EC (ATEX)
Group II, Category 1/2G: SF111A, SF211A, SF311A
Group II, Category 2G: SF120A, SF221A, SF223A, SF220A, SF321A, SF323A, SF320A, SF121A

Setting range liquids / gases [cm/s]	Greatest sensitivity [cm/s]	Medium temp. [°C]	Response time [s]	Max. T_0 gradient [K/min]	Pressure rating [bar]	Process fitting / Material	Drawing no.	Order no.
Cable 6 m · Wiring diagram no. 14								
3...300 / 200...2000	3...60 / 200...800	-20...60	1...10	15	300	M12 / ss (316S12)	15	**SF111A**
3...300 / 200...2000	3...60 / 200...800	-20...60	1...10	15	300	G 1/4 A / ss (316S12)	16	**SF211A**
3...300 / 200...2000	3...60 / 200...800	-20...60	1...10	15	300	G 1/2 A / ss (316S12)	17	**SF311A**
3...300 / 200...2000	3...60 / 200...800	-20...70	1...10	15	30	M12 / ss (316S12)	18	**SF121A**
3...300 / 200...2000	3...60 / 200...800	-20...70	1...10	15	30	G 1/4 A / ss (316S12)	19	**SF221A**
3...300 / 200...2000	3...60 / 200...800	-20...70	1...10	15	30	G 1/2 A / ss (316S12)	20	**SF321A**
M12 connector · Connector group 67 · Wiring diagram no. 15								
3...300 / 200...2000	3...60 / 200...800	-20...70	1...10	15	30	M12 / ss (316S12)	21	**SF120A**
3...300 / 200...2000	3...60 / 200...800	-20...70	1...10	15	30	G 1/4 A / ss (316S12)	22	**SF220A**
3...300 / 200...2000	3...60 / 200...800	-20...70	1...10	15	30	G 1/2 A / ss (316S12)	23	**SF320A**
Cable 6 m · Wiring diagram no. 14								
3...60 / -	3...40 / -	5...70 / -	2...20	7	30	G 1/4 A / Al2 O3	9	**SF223A**
3...60 / -	3...40 / -	5...70 / -	2...20	7	30	G 1/2 A / Al2 O3	10	**SF323A**

Common technical data

Max. cable length: 100 m / 5 x 0.5 mm
Protection rating: IP 67
Capacitance for sensors category 1G:
10 nF / 6 m cable
Capacitance for sensors category 2G:
0.4 nF / 6 m cable
Inductance for sensors category 1G:
70 µH / 6 m cable
Inductance for sensors category 2G:
2 µH / 6 m cable
Temperature class: T4

You can find scale drawings from page 239

For industrial applications

SD compressed air / consumed quantity meter

SU ultrasonic flow rate meters

Flow meters





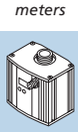

72 - 75

76 - 77



Control monitors for connection of flow sensors SF0... / SF1... / SF2... / SF3...

- **Housing for DIN rail mounting.**
- **Multicolour LED bar graph for switch point and flow state.**
- **Integrated wire monitoring from the sensor to the control monitor.**
- **II (1) G [EEx ia] IIC.**
- **PTB 01 ATEX 2075.**



VS2000 Ex i in standard DIN housing

Type SF flow sensors are rated for connection to a separate control monitor type VS2000 Ex i. Flow sensor and control monitor together form the flow monitor. These units, based on the calorimetric principle, are used for monitoring liquid and gaseous media. The systems are preferably used where environmental conditions or regulations do not permit local installation of the control monitors.

The control monitor in a DIN rail housing must be mounted outside the hazardous area. The limit values for gaseous and liquid media can be set by means of a slide switch and potentiometer. The current status is indicated via an 11-digit LED display.

In all versions the intrinsically safe heating and sensor circuit, the flow and monitoring circuit are electrically separated from each other and from the supply circuit.

As standard, the control monitor monitors a jumper cable to the sensor for wire break and short circuit.

In case of a fault an additional monitoring relay is de-energised and a red LED indicates the fault. At the same time the flow relay is de-energised and the 11-digit LED display indicates "no flow" (red LED lights).

For installation and operation the applicable regulations for the installation of electrical equipment in hazardous areas as well as the EC type test certificate and operating instructions must be observed.

Further data: operating temperature: 0...60 °C, housing material: plastic, contact rating of the relays: 250 V AC cos phi 0.7 4 A, 250 V DC 0.2 A, 24 V DC 4 A. More details on the control circuit are given in the data sheets on our website www.ifm-electronic.com.

	For industrial applications	SI thermal flow sensors / transmitters	SL thermal airflow sensors	SF / VS3000 thermal flow sensors	For hygienic areas and viscous media	SI thermal flow sensors / transmitters	For hazardous areas	SF / VS2000 Ex thermal flow sensors
Flow sensors and transmitters			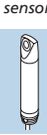	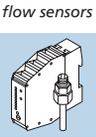				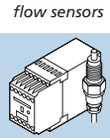
Page		52 - 57	58 - 59	60 - 65		66 - 67		68 - 71

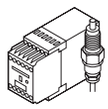

EEx (ia) IIC
Switch point setting via potentiometer
Connection terminals IP 40

U_b / Tolerance [V] / [%]	Current consumption [mA]	Power consumption [VA]	Power-on delay time [s]	Output when flow is present	Output when temp. is exceeded	Output in case of wire break	Draw-ing no.	Order no.
15 terminals...2.5 mm · Output function								
230 AC / ± 10	–	5	30	relay energised	–	relay de-energ.	24	**SN2301 ***
110 AC / ± 10	–	5	30	relay energised	–	relay de-energ.	24	**SN2302 ***
24 DC / ± 10	125	–	30	relay energised	–	relay de-energ.	24	**SR2301**

* Note for AC and AC/DC units

Miniature fuse to IEC60127-2 sheet 1, ≤ 5A (fast acting). Recommendation: check the unit for reliable function after a short circuit.

Front view

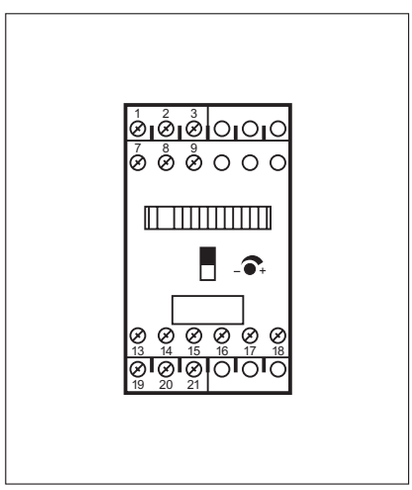

Terminal connection

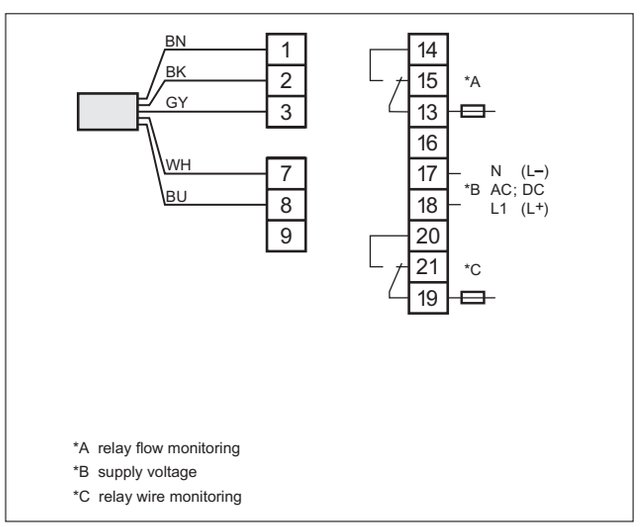

You can find scale drawings from page 239



- **Checking compressed air consumption and leakage monitoring.**
- **Compressed air meter with display and totalizer function.**
- **Wide measuring range, detection of minute leaks.**
- **Integrated pipe length: easy mounting, high accuracy.**
- **Short response time and great measurement dynamics.**



efector® metris

Precise detection of compressed air

The compressed air meter directly detects the standard volume flow (according to ISO 2533), thus eliminating the need to correct via temperature and pressure. The broad measurement dynamics of the system enables reliable detection of minute quantities, e.g. leakage. High accuracy and repeatability are ensured by the integration of the measurement sensor's key elements into a defined pipe length.

The integral 4-digit LED display plus the status LEDs allow information to be available at the point of monitoring. Whether peak consumption, present or accumulated consumption: set switch or alarm levels can be accessed and programmed via pushbutton. All settings can be protected using the electronic lock function.

Switching outputs, analogue outputs and pulse outputs are available for signal processing. Parameters are set in the user menu.

Connectors and splitter boxes

Type	Description	Order no.
	Socket, M12, Group 7 2 m black, PUR cable	**EVC001**
	Socket, M12, Group 7 5 m black, PUR cable	**EVC002**

Further connectors and splitter boxes are available starting on page 191

	For industrial applications	*SI thermal flow sensors / transmitters*	*SL thermal airflow sensors*	*SF / VS3000 thermal flow sensors*	*For hygienic areas and viscous media*	*SI thermal flow sensors / transmitters*	*For hazardous areas*	*SF / VS2000 Ex thermal flow sensors*
Flow sensors and transmitters			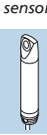	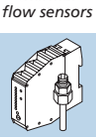				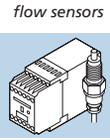
Page		*52 - 57*	*58 - 59*	*60 - 65*		*66 - 67*		*68 - 71*

Compressed air meter with integrated pipe length

Measuring [Nl/min / Nm³/h]	Setting range [Nl/min / Nm³/h]	Pressure rating [bar]	Medium temperature [°C]	Process connection	Draw-ing no.	Bestell-Nr.
M12 connector · Connector groups 7, 8, 9 · Wiring diagram no. 35						
39...11670 / 2,3...700	0,11...11,67 / 6...700	16	0...60	R2 (DN50)	1	**SD2000**
4...1250 / 0,25...75	11...1250 / 0,7...75	16	0...60	R1/2 (DN15)	2	**SD6000**
12,5...3750 / 0,75...225	34...3750 / 2,0...225	16	0...60	R1 (DN25)	3	**SD8000**
22,2...6830 / 1,3...410	60...6830 / 3,5...410	16	0...60	R11/2 (DN40)	4	**SD9000**

Common technical data

Response time: < 0.1 s
Operating voltage: 19...30 V DC
Current rating: 2 x 250 mA
Measuring error in the measuring range:
±(3 % measured value + 0.3 % final value of the measuring range)
Display: 4-digit, alphanumeric, 2 x LED
Analog. output: 4...20 mA (max. 500 Ohm)
Repeatability: ± 1 % of the measured value
Protection: IP 65, III
Material housing: PBT, PC, st. steel (304S15)

You can find scale drawings from page 242

For industrial applications
SD compressed air / consumed quantity meter
SU ultrasonic flow rate meters
Flow meters
72 - 75
76 - 77



- **Flow rate measurement for low flow of gases.**
- **Thermal measuring principle for air or N2, CO2 and argon.**
- **High accuracy and repeatability in the measuring range.**
- **Freely selectable output functions: binary, analogue and pulse.**
- **Short response time and great measurement dynamics.**





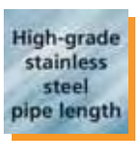



efector metris

Measuring small quantities of air and gases

Three further versions complement the efector metris series in this respect: One of the versions reliably detects small quantities of compressed air and the other one small quantities of gases such as argon, carbon dioxide or nitrogen. Smallest quantities, e.g. for dosing, can thus be exactly controlled and monitored. Due to the integrated totaliser these units enable long-term detection and documentation of consumed total quantities. The sensors detect the standard volume flow directly (according to ISO 2533). The high measurement dynamics of the system also enables the reliable detection of minute leakage. High accuracy and repeatability are ensured by calibrating the sensors in their defined pipe length. The integral 4-digit LED display plus the status LEDs allow information to be available at the point of monitoring. Switching outputs, analogue outputs and pulse outputs are available for signal processing. Parameters are set in the user menu.

Connectors and splitter boxes

Type	Description	Order no.
	Socket, M12, Group 7 2 m black, PUR cable	EVC001
	Socket, M12, Group 7 5 m black, PUR cable	EVC002
	Socket, M12, Group 7 10 m black, PUR cable	EVC003

Further connectors and splitter boxes are available starting on page 191

	For industrial applications	*SI thermal flow sensors / transmitters*	*SL thermal airflow sensors*	*SF / VS3000 thermal flow sensors*	*For hygienic areas and viscous media*	*SI thermal flow sensors / transmitters*	*For hazardous areas*	*SF / VS2000 Ex thermal flow sensors*
Flow sensors and transmitters			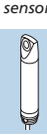	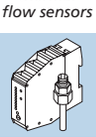				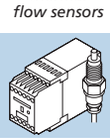
Page		*52 - 57*	*58 - 59*	*60 - 65*		*66 - 67*		*68 - 71*

SD5000: consumed quantity meter for small compressed air quantities.
SD5100: consumed quantity meter for small quantities of special gases.
SD6100: consumed quantity meter for special gases.

Measuring [Nl/min / Nm³/h]	Setting range [Nl/min / Nm³/h]	Pressure rating [bar]	Medium temperature [°C]	Process connection	Draw-ing no.	Bestell-Nr.
M12 connector · Connector groups 7, 8, 9 · Wiring diagram no. 35						
0.06...15	0.14...15	16	0...60	G1/4 (DN8)	5	**SD5000**
Ar: 0.08...24.54 / CO2: 0.047...14.38 / N2: 0.05...14.94	Ar: 0.18...24.54 / CO2: 0.10...14.38 / N2: 0.10...14.94	16	0...60	G1/4 (DN8)	5	**SD5100**
Ar: 0.35...105 / CO2: 0.22...65 / N2: 0.23...67.5	Ar: 0.9...105 / CO2: 0.6...65 / N2: 0.6...67.5	16	0...60	R1/2 (DN15)	2	**SD6100**

Common technical data

Response time: < 0.1 s
Operating voltage: 19...30 V DC
Current rating: 2 x 250 mA
Analogue output: 4...20 mA
(max. 500 Ohm)
Display: 4-digit, alphanumeric, 7 x LED
Analogue output: 4...20 mA
(max. 500 Ohm)
Protection: IP 67 / III
Material sensor: stainless steel, ceramics, PEEK, polyester, Viton, aluminium

You can find scale drawings from page 242

For industrial applications
SD compressed air / consumed quantity meter
SU ultrasonic flow rate meters
Flow meters
72 - 75
76 - 77



- **Ultrasonic flow rate meter in robust inline design.**
- **Flow rate, totalising and medium temperature indication.**
- **Suited for water up to a flow rate of 100 l/min.**
- **Binary, analogue and pulse outputs for signal processing.**
- **R 1/2 and R 3/4 process connection via adapter fitting.**









Accessories

Type	Description	Order no.
	Adapter G 3/4 I - R1/2 for flow monitor type SU7	**E40151**
	Adapter G 1 I - R1/2 for flow monitor type SU8	**E40152**
	Adapter G 1 I - R3/4 for flow monitor type SU8	**E40153**

Connectors and splitter boxes

Type	Description	Order no.
	Socket, M12, Group 7 2 m black, PUR cable	**EVC004**
	Socket, M12, Group 7 5 m black, PUR cable	**EVC005**

Further accessories are available starting on page 217

Further connectors and splitter boxes are available starting on page 191

	For industrial applications	*SI thermal flow sensors / transmitters*	*SL thermal airflow sensors*	*SF / VS3000 thermal flow sensors*	*For hygienic areas and viscous media*	*SI thermal flow sensors / transmitters*	*For hazardous areas*	*SF / VS2000 Ex thermal flow sensors*
Flow sensors and transmitters			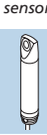	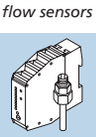				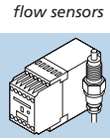
Page		*52 - 57*	*58 - 59*	*60 - 65*		*66 - 67*		*68 - 71*

Robust aluminium housing
4-digit alphanumeric display for the units of measurement l/min, m³/h and °C

Measuring range [Nl/min]	Setting range [Nl/min / Nm³/h]	Pressure rating [bar]	Medium temperature [°C]	Process connection	Draw-ing no.	Order-no.
M12 connector · OUT1: ⎓ / ⎍ / pulse output, OUT2: ⎓ / ⎍ / analog. · Connector gr. 7, 8, 9 · Wiring diagram no. 30						
0...50	0,1...50 / 0...3	16	5...80	G 3/4	6	**SU7000**
M12 connector · Output function 2 x ⎓ / ⎍ · Connector groups 7, 8, 9 · Wiring diagram no. 3						
0...50	0,1...50 / -	16	5...80	G 3/4	6	**SU7200**
M12 connector · OUT1: ⎓ / ⎍ / pulse output, OUT2: ⎓ / ⎍ / analog. · Connector gr. 7, 8, 9 · Wiring diagram no. 30						
0...100	0,2...100 / 0,01...6	16	5...80	G 1	7	**SU8000**
M12 connector · Output function 2 x ⎓ / ⎍ · Connector groups 7, 8, 9 · Wiring diagram no. 3						
0...100	0,2...100 / -	16	5...80	G 1	7	**SU8200**

Common technical data

Response time: < 2 s (flow rate), 15 s
(temperature)
Operating voltage: 20...28 V DC
Analogue output: 4...20 mA
(max. 500 Ohm), 0...10 V (max. 10 kOhm)
Current rating: 2 x 250 mA
Setting range temperature:
Switch point: 5...79,8 °C
Analogue starting point: 5...65 °C
Analogue end point: 20...80 °C
Resolution temperature: 0.2

You can find scale drawings from page 242

For industrial applications
SD compressed air / consumed quantity meter
SU ultrasonic flow rate meters
Flow meters


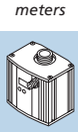
72 - 75
76 - 77



Pressure sensors

efector500

Pressure sensors and transmitters

System description 80 - 83
Selection chart 84 - 88

Universal application



Pressure sensors and transmitters for industrial applications

Type PN pressure sensor with display 90 - 91
Type PE pressure sensors / transmitters with display 92 - 93
Type PN / PY pressure sensors / transmitters with display 94 - 97
Type PK pressure sensors with setting rings 98 - 99
Type PP pressure sensor 100 - 101
Type PA / PPA pressure transmitter 102 - 103
Type PS part seat monitoring 104 - 105
Type PY7 pressure sensor with display 106 - 107
Type PNI pressure sensors with analogue input 108 - 109
FDT Container program 110 - 111
EPS-parameter setting system 112 - 113

Special application



Pressure transmitters for hygienic areas and viscous media

Types PI pressure transmitters with display 114 - 119
Type PIM pressure transmitter for pump diagnosis 120 - 121
Types PL / PM pressure transmitters 122 - 123
Types PF / PI pressure transmitters with display 124 - 125



Pressure sensors and transmitters for hazardous areas

Types PF / PN pressure sensors / transmitters with display 126 - 127

Introduction

ifm offers a wide range of electronic pressure and vacuum sensors to meet the requirements of various industrial applications. The ceramic-capacitive measuring cell traditionally used in the electronic pressure sensor of the PK series has been replaced by a stainless steel measuring cell with thick film wire strain gauge.

Ceramic measuring cell in pressure and vacuum sensors

Due to an optimised support in the process connection the ceramic measuring cell is designed for highest stress with nominal pressures of -1 to 600 bar. Contrary to the mechanical piston pressure sensor no moving parts like pistons or springs are required. The result: The sensors are robust against mechanical influence and work completely without wear and tear or fatigue.

Advantages of the ceramic measuring cell: It is resistant to corrosion and absolutely long-term stable. In the long run this guarantees continuous accuracy of the measured values. These tried-and tested pressure sensors are resistant to dynamic pressure peaks and guarantee high overload resistance even in cases of extreme pressure peaks that occur for example with fast closing valves. Depending on the mounting position pressure peaks as well as vacuum peaks can alternate quickly. A typical example can be found in the vacuum transport technology. Materials are picked up and released by means of vacuum suckers. There are rapid changes between negative (vacuum) and positive pressure. Also with this operation with changing loads and strain on the material, the ceramic measuring cell proves its extraordinary robustness. As the electronic components are mounted on a flexible film instead of on a rigid circuit board, maximum shock and vibration resistance is achieved.

Operating principle of the ceramic-capacitive measuring principle

The most important element of the sensor is the ceramic pressure measuring cell made of aluminium oxide (Al_2O_3). It has a disk made of aluminium oxide with a layer of gold resinate at the inside. This gold layer forms a measuring electrode and a reference electrode on the aluminium oxide disk. The counterpart consists of a second disk made of aluminium oxide to which a further layer of gold is applied and which forms the second measuring electrode. The two disks are connected by means of glass frit with the electrode layers being opposite each other. The distance is approx. 10 µm. After assembly the structure of the ceramic measuring cell is similar to a plate capacitor. The change of the system pressure and the resulting change of capacitance is measured, processed by a microprocessor and provided as the requested output signal.

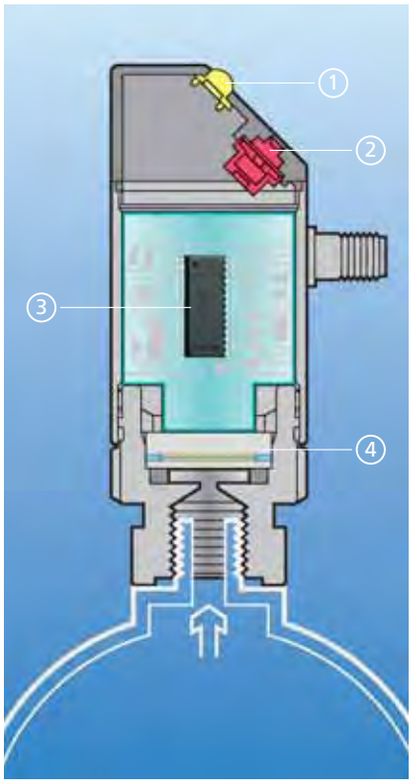

Structure of the pressure sensor with integrated control monitor:
1. 4-digit 10-segment display
2. Programming buttons
3. Microprocessor
4. Ceramic pressure measuring cell with special support for maximum strain

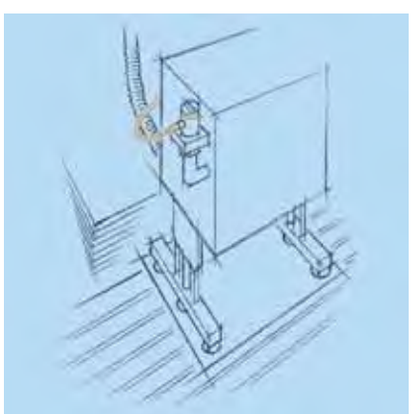

Typical application for vacuum sensors: Transport technology by means of vacuum suckers.

Stainless steel measuring cell in pressure and vacuum sensors

Units with wire strain gauge in thick-film technology on a stainless steel measuring cell are distinguished by their very compact and robust design. They can be used in almost all industrial areas. The welded stainless steel measuring cell without any seals does not only ensure a high degree of safety in hydraulic and pneumatic applications, but also in applications with gas pressures of up to 400 bar. In the air conditioning and refrigeration technology where aggressive CFCs (freons) are used ifm pressure sensors with stainless steel measuring cell are also ideal. The three to thirty times greater bursting pressure, depending on the selected measuring range of the unit, and the high shock and vibration resistance support the maximum operational safety of ifm pressure sensors with stainless steel measuring cell.

The welded stainless steel measuring cell – for diverse applications in gases and liquids up to 400 bar: e.g. hydraulics, gas, water, brake liquid or cryogens (freons).



A variety of electronic sensor solutions

The ifm pressure and vacuum sensors are available in various designs. These include pressure and vacuum switches and combined units with 4-digit alphanumeric 10-segment display as well as dedicated transmitter units which can be evaluated and parameterised via an additional interface *(for further information please refer to the specific product pages under "FDT Container program")*. The ifm pressure and vacuum sensors provide a binary-switched signal via one or two outputs. The ifm transmitter units provide an analogue current (4...20 mA) or voltage signal (0...10 V) which is proportional to the system pressure. The ifm combined units provide binary as well as analogue output signals.

Sensors for hygienic areas

Special process sensors for liquid or viscous media monitor the pressure in applications in the food, beverage, and pharmaceutical industries where they meet the 3A, FDA, and EHEDG requirements.

PF, PI, PL, PM series

The ceramic measuring cell (Al_2O_3, 99.9 %) is mounted flush into the high-grade stainless steel housing (316S12). This enables optimum cleaning of the sensor. The combined and transmitter units for hygienic applications are available in two versions: The PF and PL series for medium temperatures of up to 80 °C as well as the PI and PM series for applications with high temperatures of up to 125 °C or 145 °C for one hour.

Due to the flush sealing and high-purity ceramic measuring cell the pressure sensors are also suited for hygienic applications.



Sensors for industrial applications

The complete range of electronic pressure and vacuum sensors is available for hydraulic and pneumatic solutions. The sensors are integrated into the process by means of G 1/4 internal or external thread and with adapters in different sizes. Due to their versatility, ifm pressure and vacuum sensors can be used in various applications and they can be adapted to users' requirements worldwide.

This also means that additional thread sizes, which are typical in other countries, are available.

PN series

The robust pressure sensors for positive or negative pressures and the combined units of the PN series for hydraulic and pneumatic applications ensure trouble-free, reliable operation. The tried-and-tested ceramic-capacitive measuring principle makes this series immune to overload operation and high pressure peaks. Furthermore it guarantees maximum life. The structured menu navigation and the 4-digit alphanumeric 10-segment display allow easy operation adapted to the user's needs. This concept has been appreciated by ifm customers worldwide for more than ten years. The units of this series feature an interface by means of which all data and parameters can be monitored via PC and stored for documentation *(for further information please refer to the specific product pages under "FDT Container program")*. Depending on the version everything is available in the PN series – from binary switching outputs to scaleable analogue outputs and analogue input.



The display: The 4-digit, alphanumeric 10-segment display shows the system pressure at a glance.

PP series

ifm also offers solutions for places which are difficult to access in installations and machines, or in mobile applications. The pressure sensors of the PP series have an integrated interface by means of which the operator can read data from the unit and can carry out parameterisation. This interface can be accessed on site or from longer distances by means of the ifm Container program *(for further information please refer to the specific product pages under "FDT Container program")*. An AS-i compatible pressure sensor is also available in this series.

PA series

If processing only of analogue values of a system pressure is required, ifm offers the pressure transmitters of the PA series.

PK series

Handling and mounting of the new PK series with the new *easy turn* operating concept is ingeniously simple. The set and reset points of the two complementary outputs can be set by means of the radial setting rings without pressure being applied. An additional version with two independent switching outputs and a fixed hysteresis of 2 % underlines the variety of applications for this series. These innovative pressure sensors with welded stainless steel measuring cell without any seals enable more than 50 million reliable switching cycles with a price / performance ratio which is a real alternative to mechanical pressure switches.



The easy turn operating concept: There is no easier way. Set and reset point adjustment with only two turns.

Pressure sensors in hazardous areas

The pressure sensors are suitable for monitoring non-explosive liquids and gases in hazardous dust areas in accordance with group II, category 3D. The parts of the sensors which are in contact with the medium are made of high-grade stainless steel (316S12) or ceramics (Al_2O_3, 96 %).

Relative pressure

For all ifm pressure and vacuum sensors the pressure is measured relative to the existing atmospheric pressure (air pressure). In this case the difference to the local atmospheric pressure is indicated. The measured positive range indicates that the measured pressure is higher than the existing atmospheric pressure and the measured negative pressure indicates the opposite.

Parameter setting and analysis

Data sets of individual sensors can be replaced quickly and conveniently by means of the ifm Container program. The software which is based on the innovative FDT technology ensures a clear overview of all parameters and the current process data. Process data and set parameters can be recorded and stored. For archiving on paper this data can be represented by means of standard computer programs and printed. *(For further information see the product pages under FDT Container program).*



Robust: The use of high-quality materials makes the pressure and vacuum sensors resistant even under extreme environmental conditions.

Well-structured menu and parameter overview ifm Container program.



PIM family – the pump diagnostic sensor

The pump diagnostic sensor enables diagnosis independently of pump type, pump characteristics and rotational speed range. The conveying characteristics of the pump to be monitored is continuously detected. Significant changes are detected and lead to an automatic alarm message when critical states are reached.

The pump sensor can be set up easily and without specialist knowledge. The conveying characteristics of the pump is simply taught.

A bar graph displays the state of the pump on the unit.

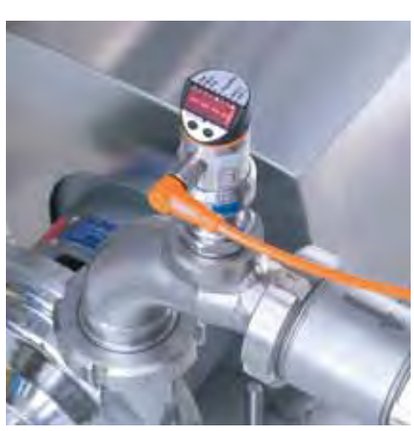

Selection chart

Housing / Process connection		Output		Materials wetted parts	Measuring range [bar]	Medium temperature [°C]	Application	Page
		Analogue	Binary					
Pressure sensors and transmitters								
type PK65.. 	G 1/4 male M5 female	–	2 x DC comple-mentary	stainless steel (316S12) Viton	0...400	-25...80	●	98
type PK67.. 	R 1/4 male	–	2 x DC comple-mentary	stainless steel (316S12) Viton	0...400	-25...80	●	98
type PK75.. 	G 1/4 male M5 female	–	2 x DC 2 % hysteresis	stainless steel (316S12) Viton	0...400	-25...80	●	98
type PK87.. 	R 1/4 male	–	2 x DC comple-mentary	stainless steel (316S12) Viton	0...400	-25...80	●	98
type PN.. ATEX 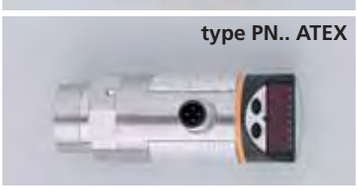	G 1/4 female	1 x 4...20 mA	1 x DC + EPS interface	stainless steel (303S21) ceramics Viton	-1...10	-20...60	●	126
type PN.. ATEX 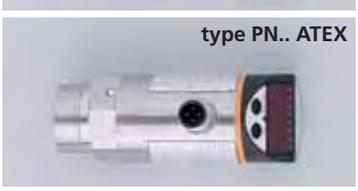	G 1/4 female	–	2 x DC + EPS interface	stainless steel (303S21) ceramics Viton	0...10	-20...60	●	126
type PN20.. 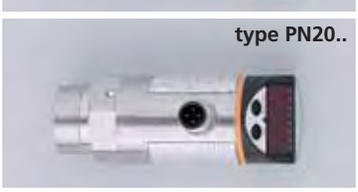	G 1/4 female	1 x 4...20 mA or 1 x 0...10 V scaleable	1 / 2 x DC + EPS interface	stainless steel (303S21) ceramics Viton	-1...400	-25...80	●	94
type PN30.. 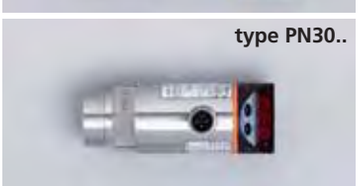	G 1/4 female	1 x 4...20 mA or 1 x 0...10 V	1 x DC + EPS interface	stainless steel (303S21) ceramics Viton	-1...600	-25...80	●	96

For industrial applications

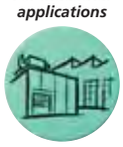

For hygienic areas and viscous media



For hazardous areas



Housing / Process connection		Output		Materials wetted parts	Measuring range [bar]	Medium temperature [°C]	Application	Page
		Analogue	Binary					
Pressure sensors and transmitters								
type PN50.. 	G 1/4 female	–	1 x DC + EPS interface	stainless steel (303S21) ceramics Viton	0...400	-25...80	●	90
type PN70.. 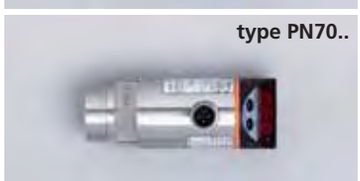	G 1/4 female	–	Diagnosis 2 x DC + EPS interface	stainless steel (303S21) ceramics Viton	-1...600	-25...80	●	90
type PE70.. 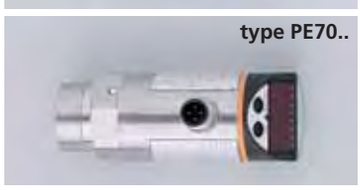	G 1/4 female	–	Diagnosis 2 x DC + EPS interface	stainless steel (316S12) ceramics 99.9 % Viton	-1...100	-25...80	●	92
type PE30.. 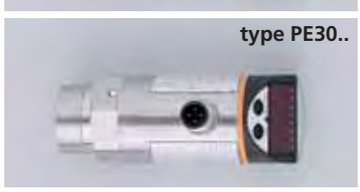	G 1/4 female	1 x 4...20 mA or 1 x 0...10 V	1 x DC + EPS interface	stainless steel (316S12) ceramics Viton	-1...400	-25...80	●	92
type PNI.. 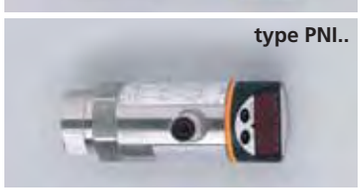	G 1/4 female	analogue input 1 x 4...20 mA or 1 x 0...10 V	2 x DC	stainless steel (303S21) ceramics Viton	0...250	-25...80	●	108
type PY20.. 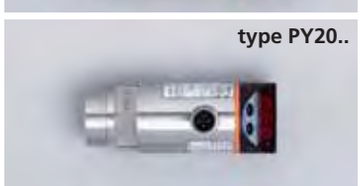	G 1/4 female	1 x 4...20 mA or 1 x 0...10 V	1 x DC + EPS interface	stainless steel (303S21) ceramics Viton	-0.25...0.25	-25...80	●	94
type PF20.. 	ASEPTOFLEX	1 x 4...20 mA or 1 x 0...10 V	1 / 2 x DC + EPS interface	stainless steel (316S12) ceramics 99.9 % Viton	-1...25	-25...80	●	124
type PI20.. 	ASEPTOFLEX	1 x 4...20 mA or 1 x 0...10 V	1 / 2 x DC + EPS interface	stainless steel (316S12) ceramics 99.9 % Viton	-1...25	-25...125 (-25...145 1h / day)	●	114

For industrial applications

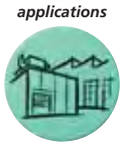

For hygienic areas and viscous media



For hazardous areas



Housing / Process connection		Output		Materials wetted parts	Measuring range [bar]	Medium temperature [°C]	Application	Page
		Analogue	Binary					
Pressure sensors and transmitters								
type PF26.. 	G 1 male	1 x 4...20 mA or 1 x 0...10 V	1 / 2 x DC + EPS interface	stainless steel (316S12) ceramics 99.9 % Viton	-1...100	-25...80	○	124
type PF.. ATEX 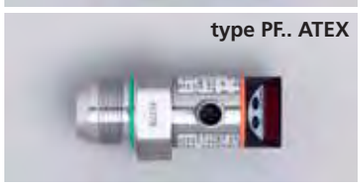	G 1 male	1 x 4...20 mA or 1 x 0...10 V	1 / 2 x DC + EPS interface	stainless steel (316S12) ceramics 99.9 % Viton	-1...25	-25...80	●	126
type PI16.. 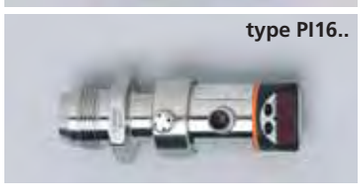	G 1 male	1 x 4...20 mA	–	stainless steel (316S12) ceramics 99.9 % Viton	-1...25	-25...125	○	116
type PI26.. 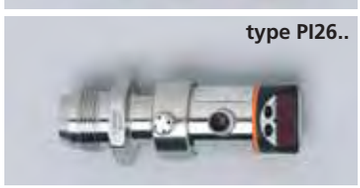	G 1 male	1 x 4...20 mA or 1 x 0...10 V	1 / 2 x DC + EPS interface	stainless steel (316S12) ceramics 99.9 % Viton	-1...100	-25...125 (-25...145 1h / day)	○	114
type PI10.. 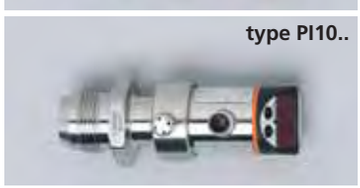	ASEPTOFLEX	1 x 4...20 mA	–	stainless steel (316S12) ceramics 99.9 % Viton	-1...10	-25...125	○	116
type PF29.. 	G 3/4 male	1 x 4...20 mA or 1 x 0...10 V	1 / 2 x DC + EPS interface	stainless steel (316S12) ceramics 99.9 % Viton	-1...25	-25...80	○	124
type PI29.. 	G 3/4 male	1 x 4...20 mA or 1 x 0...10 V	1 / 2 x DC + EPS interface	stainless steel (316S12) ceramics 99.9 % Viton	-1...25	-25...125 (-25...145 1h / day)	○	114
type PI7... 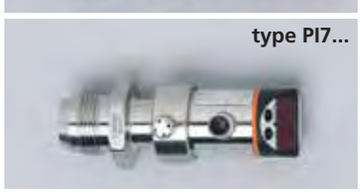	G 1 male G 3/4 male ASEPTOFLEX	–	2 x DC	stainless steel (316S12) ceramics 99.9 % Viton	-1...25	-25...125 (-25...145 1h / day)	○	118

For industrial applications

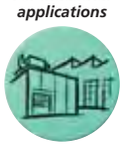

For hygienic areas and viscous media



For hazardous areas



Housing / Process connection		Output		Materials wetted parts	Measuring range [bar]	Medium temperature [°C]	Application	Page
		Analogue	Binary					
Pressure sensors								
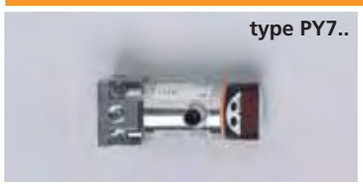 **type PY7..**	1 x G 1/4 female, 2 x M6 or 2 x G 1/4 female	–	Diagnosis 2 x DC	free cutting steel (441S29) ceramics Viton	0...400	-25...80	●	106
 **type PIM..**	G 1 male ASEPTOFLEX	–	2 x DC	stainless steel (316S12) ceramics 99.9 % Viton	-1...25	-25...125 (-25...145 1h / day)	○	120
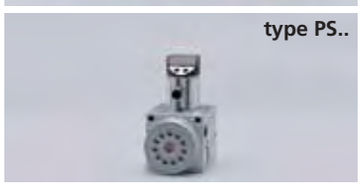 **type PS..**	Part seat monitoring: Non-contact position definition for gap distances of up to 1.7 mm. High measuring accuracy, almost independent of the supply pressure, integrated pressure sensor with two switching outputs.						●	104
Pressure transmitter								
 **type PA30..**	G 1/4 female	1 x 4...20 mA	–	stainless steel (303S21) ceramics Viton	-1...600	-25...80	●	102
 **type PA90..**	G 1/4 female	1 x 0...10 V	–	stainless steel (303S21) ceramics Viton	0...400	-25...80	●	102
 **Typ PP75..**	G 1/4 male	–	2 x DC	stainless steel (303S21) ceramics Viton	-1...400	-25...90	○	100
 **type PPA**	G 1/4 female	–	AS-interface	stainless steel (303S21) ceramics Viton	0...400	-25...80	●	102
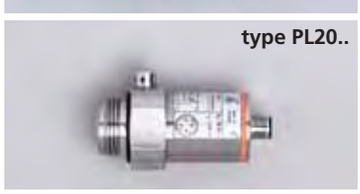 **type PL20..**	ASEPTOFLEX	1 x 4...20 mA + EPS interface	–	stainless steel (316S12) ceramics 99.9 % Viton	-1...25	-25...80	○	122

For industrial applications

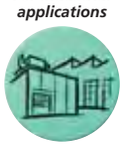

For hygienic areas and viscous media



For hazardous areas



Selection chart

Housing / Process connection		Output		Materials wetted parts	Measuring range [bar]	Medium temperature [°C]	Application	Page
		Analogue	Binary					
Pressure transmitter								
 **type PL26..**	G 1 male	1 x 4...20 mA + EPS interface	–	stainless steel (316S12) ceramics 99.9 % Viton	-1...100	-25...80	●	122
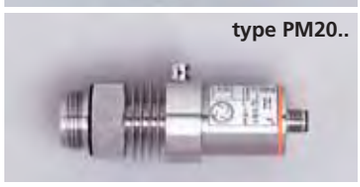 **type PM20..**	ASEPTOFLEX	1 x 4...20 mA + EPS interface	–	stainless steel (316S12) ceramics Viton	-1...25	-25...125 (-25...145 1h / day)	●	122
 **type PM26..**	G 1 male	1 x 4...20 mA + EPS interface	–	stainless steel (316S12) ceramics 99.9 % Viton	-1...25	-25...125 (-25...145 1h / day)	●	122
EPS parameter-setting systems								
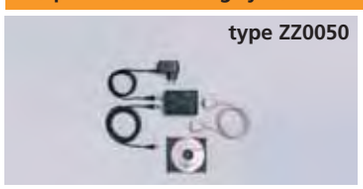 **type ZZ0050**	EPS service system: Convenient configuration of sensors with EPS capability by means of notebook or PC. Easy archiving, fast setup and real time display.						● ● ●	110
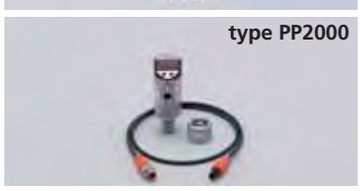 **type PP2000**	Programming and display unit: Quick and easy remote parameter setting of sensors with EPS capability. Local indication, country-specific pressure units and non-volatile storage memory function.						● ● ●	102

For industrial applications

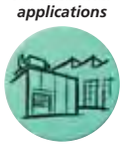

For hygienic areas and viscous media



For hazardous areas



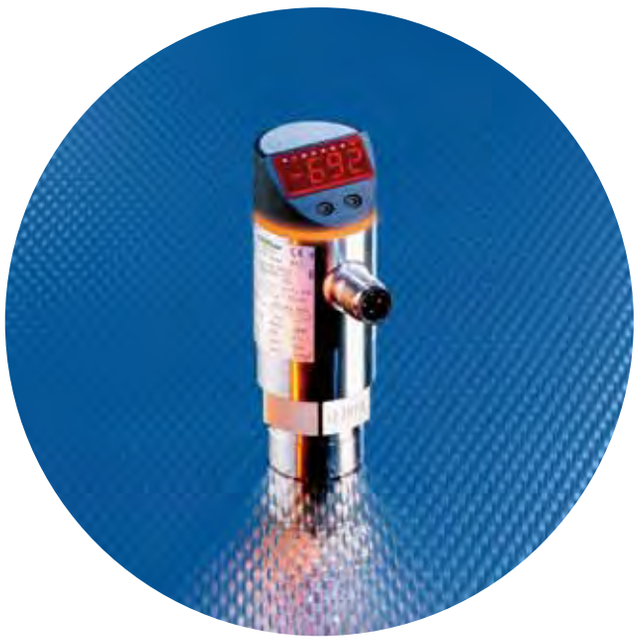

- **Country-specific pressure units, selectable in bar / mbar, kPa / MPa, psi.**
- **Memory function for the highest measured system pressure.**
- **Drift-free operation for more than 100 million pressure cycles.**
- **Setting and measured values indicated on a 4-digit 10-segment display.**
- **Easy operating concept with extended functions for optimum use.**









Accessories

Type	Description	Order no.
	Adapter, G 1/4 - G 1/2	**E30000**
	Adapter, G 1/4 - G 1/4	**E30007**
	Flange adapter, G 1/4	**E30003**
	Mounting clamp, Ø 34 mm	**E10193**

Connectors and splitter boxes

Type	Description	Order no.
	Socket, M12, Group 7 2 m black, PUR cable	**EVC004**
	Socket, M12, Group 7 5 m black, PUR cable	**EVC005**
	Socket, M12, Group 7 10 m black, PUR cable	**EVC006**
	Socket, M12, Group 11 wirable	**E11512**

Further accessories are available starting on page 217

Further connectors and splitter boxes are available starting on page 191

	For industrial applications	*PN pressure sensors with display*	*PE pressure sensors / transmitters with display*	*PN / PY pressure sensors / transmitters with display*	*PK pressure sensors with setting rings*	*PP pressure sensors*	*PA / PPA pressure transmitters*	*PS part seat monitoring*
Pressure sensors and transmitters								
Page		*90 - 91*	*92 - 93*	*94 - 97*	*98 - 99*	*100 - 101*	*102 - 103*	*104 - 105*

Measuring cell
Process connection G 1/4 female
PN7: PNP/NPN switching, diagnostic output

Measuring range [bar]	$P_{overload}$ max. [bar]	$P_{bursting}$ min. [bar]	Switch-on point SP1 / SP2 [bar]	Switch-off point rP1 / rP2 [bar]	In steps of [bar]	Protection	Draw-ing no.	Order no.
M12 connector · Output function ⎍/⎍ · Connector groups 7, 8, 10 · Wiring diagram no. 5								
0...400	600	1000	4...400	2...398	2	IP 67	1	**PN5000**
0...250	400	850	2...250	1...249	1	IP 67	2	**PN5001**
0...100	300	650	1.0...100.0	0.5...99.5	0.5	IP 67	2	**PN5002**
0...25	150	350	0.2...25.0	0.1...24.9	0.1	IP 65	2	**PN5003**
-1...10	75	150	-0.90...10.00	-0.95...9.95	0.05	IP 65	2	**PN5004**
0...2.5	20	50	0.02...2.50	0.01...2.49	0.01	IP 65	2	**PN5006**
0...1	10	30	0.01...1	0.005...0.995	0.005	IP 65	2	**PN5007**
M12 con. · 2 x ⎍/⎍ progr or 1 x ⎍/⎍ progr. + 1 x ⎍ · Connector groups 7, 8, 9 · Wiring diagram no. 36								
0...600	800	1200	6...600	3... 597	3	IP 67	1	**PN7060**
0...400	600	1000	4...400	2...398	2	IP 67	1	**PN7000**
0...250	400	850	2...250	1...249	1	IP 67	2	**PN7001**
0...100	300	650	1.0...100.0	0.5...99.5	0.5	IP 67	2	**PN7002**
0...25	150	350	0.2...25.0	0.1...24.9	0.1	IP 65	2	**PN7003**
-1...10	75	150	-0.90...10.00	-0.95...9.95	0.05	IP 65	2	**PN7004**
0...2.5	20	50	0.02...2.50	0.01...2.49	0.01	IP 65	2	**PN7006**
0...1	10	30	0.01...1	0.005...0.995	0.005	IP 65	2	**PN7007**
-1...1	20	50	-0.97...1	-0.98...0.99	0.01	IP 65	2	**PN7009**

Common technical data

Ub: 18...36 V DC
Current rating: 250 mA
Current consumption: < 50 mA
Switch point accuracy: < ± 0.5
Materials (wetted parts):
stainless steel (303S21), ceramics, FPM (Viton)
Shock resistance: 50 g (11 ms)
Vibration resistance: 20 g (10...2,000 Hz)
For further data see
www. ifm-electronic.com

You can find scale drawings from page 243

PY7 pressure sensors with display — *106 - 107*

PNI pressure sensors with analogue input — *108 - 109*

FDT-Container-Programm — *110 - 111*

EPS parameter-setting systems — *112 - 113*

For hygienic areas and viscous media — *114 - 125*

For hazardous areas — *126 - 127*

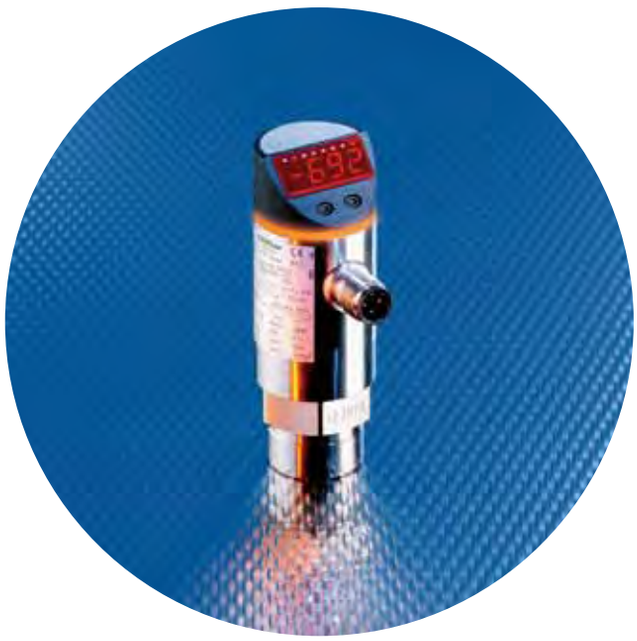

- **Optimised chemical resistance, high-purity ceramic measuring cell (99.9 %).**
- **Extremely robust and overload-protected.**
- **Low-cost alternative in non-aseptic peripheral processes.**
- **Setting and measured values indicated on a 4-digit 10-segment display.**
- **Drift-free operation for more than 100 million pressure cycles.**







Accessories

Type	Description	Order no.
	Mounting device 2 way	**E30078**
	Mounting device 3 way	**E30079**
	Protective cover, stainless steel (320S31), O-ring: EPDM	**E30104**
	Protective cover, stainless steel (320S31), O-ring: Viton	**E30101**

Connectors and splitter boxes

Type	Description	Order no.
	Socket, M12, Group 7 5 m black, PUR cable	**EVC005**
	Socket, M12, Group 7 10 m black, PUR cable	**EVC006**
	Socket, M12, Group 7 5 m black, PUR cable	**EVC002**
	Socket, M12, Group 7 10 m black, PUR cable	**EVC003**

Further accessories are available starting on page 217

Further connectors and splitter boxes are available starting on page 191

	For industrial applications	*PN pressure sensors with display*	*PE pressure sensors / transmitters with display*	*PN / PY pressure sensors / transmitters with display*	*PK pressure sensors with setting rings*	*PP pressure sensors*	*PA / PPA pressure transmitters*	*PS part seat monitoring*
Pressure sensors and transmitters								
Page		*90 - 91*	*92 - 93*	*94 - 97*	*98 - 99*	*100 - 101*	*102 - 103*	*104 - 105*

Measuring cell with 99.9 % ceramics and EPDM cell sealing
Process connection G 1/4 I

Measuring range [bar]	$P_{overload}$ max. [bar]	$P_{bursting}$ min. [bar]	Switch-on point SP1 [bar]	Switch-off point rP1 [bar]	In steps of [bar]	Protection	Draw-ing no.	Order no.
M12 con. · 2 x ⎓ / ⏚ progr. or 1 x ⎓ / ⏚ progr. + 1 x ⏚ · Connector groups 7, 8, 9 · Wiring diagram no. 36								
-1...1	20	50	-0.97...1	-0.98...0.99	0.01	IP 67	2	**PE7009**
0...2.5	20	50	0.02...2.50	0.01...2.49	0.01	IP 67	2	**PE7006**
0...10	75	150	0.10...10.00	0.05...9.95	0.05	IP 67	2	**PE7004**
0...25	150	350	0.2...25.0	0.1...24.9	0.1	IP 67	2	**PE7003**
0...100	300	650	1.0...100.0	0.5...99.5	0.5	IP 67	2	**PE7002**
M12 connector · Output function ⎓ / ⏚ 4...20 mA or 0...10 V · Connector groups 7, 8, 10 · Wiring diagram no. 16								
0...400	600	1000	4...400	2...398	2	IP 67	1	**PE3000**
0...250	400	850	2...250	1...249	1	IP 67	2	**PE3001**
0...100	300	650	1.0...100.0	0.5...99.5	0.5	IP 67	2	**PE3002**
0...25	150	350	0.2...25.0	0.1...24.9	0.1	IP 67	2	**PE3003**
-1...10	75	150	-0.90...10.00	-0.95...9.95	0.05	IP 67	2	**PE3004**
0...2.5	20	50	0.02...2.50	0.01...2.49	0.01	IP 67	2	**PE3006**
-1...0	10	30	-0.99...0	-0.995...-0.005	0.005	IP 67	2	**PE3029**
-1...1	20	50	-0.97...1	-0.98...0.99	0.01	IP 67	2	**PE3009**

Common technical data

Ub: 18...36 V DC
Current consumption: < 50 mA
Current rating: 250 mA
Switch point accuracy:< ± 0.5
Repeatability: < ± 0.1
Shock resistance: 50 g (11 ms)
Vibration resistance: 20 g (10...2,000 Hz)
Materials (wetted parts):
ceramics (99.9 % AL2O3), high-grade stainless steel (316S12), EPDM

You can find scale drawings from page 243

PY7 pressure sensors with display — *106 - 107*
PNI pressure sensors with analogue input — *108 - 109*
FDT-Container-Programm — *110 - 111*
EPS parameter-setting systems — *112 - 113*
For hygienic areas and viscous media — *114 - 125*
For hazardous areas — *126 - 127*

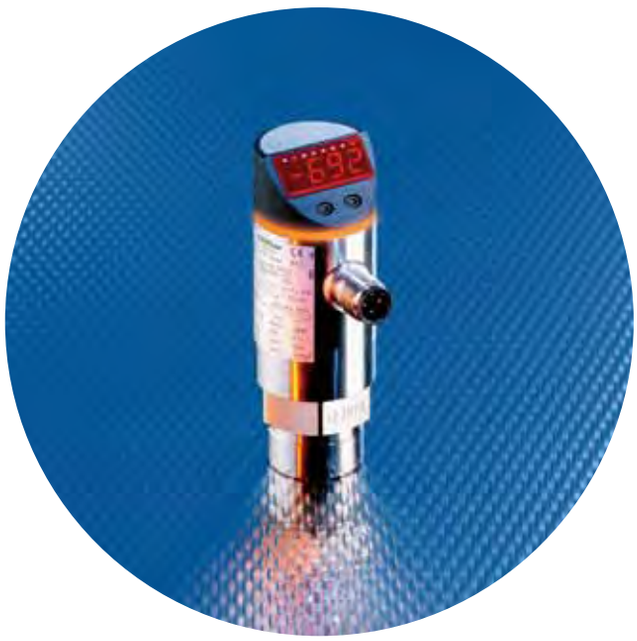

- **Scaleable analogue output and integrated switching function.**
- **Analogue output selectable: 0...10 V or 4...20 mA.**
- **Local indication of measured values on a 4-digit 10-segment display.**
- **Clear and easy operating concept with extensive features.**
- **Country-specific pressure units, selectable switching output logic.**



Accessories

Type	Description	Order no.
	Protective cover	**E30006**
	Mounting device 2 way	**E30078**
	Mounting clamp, Ø 34 mm	**E10193**
	Mounting device 3 way	**E30079**

Connectors and splitter boxes

Type	Description	Order no.
	Socket, M12, Group 7 2 m black, PUR cable	**EVC004**
	Socket, M12, Group 7 5 m black, PUR cable	**EVC005**
	Socket, M12, Group 7 10 m black, PUR cable	**EVC006**
	Socket, M12, Group 7 5 m black, PUR cable	**EVC002**
	Socket, M12, Group 7 10 m black, PUR cable	**EVC003**

Further accessories are available starting on page 217

Further connectors and splitter boxes are available starting on page 191

	For industrial applications	PN pressure sensors with display	PE pressure sensors / transmitters with display	PN / PY pressure sensors / transmitters with display	PK pressure sensors with setting rings	PP pressure sensors	PA / PPA pressure transmitters	PS part seat monitoring
Pressure sensors and transmitters								
Page		*90 - 91*	*92 - 93*	*94 - 97*	*98 - 99*	*100 - 101*	*102 - 103*	*104 - 105*



PYxxxx: Measuring accuracy 0.2 %
PNxxxx: Measuring accuracy 0.6 %

Measuring range [bar]	$P_{overload}$ max. [bar]	$P_{bursting}$ min. [bar]	Analogue lower end [bar]	Analogue upper end [bar]	Switch-on point SP1 / SP2 [bar]	Switch-off point rP1 / rp2 [bar]	In steps of [bar]	Drawing no.	Order no.
M12 connector · Output 1 x ⎓ / ⏚ progr. + 1 x analogue · Connector groups 7, 8, 10 · Wiring diagram no. 29									
-0.25...0.25	10	30	-0.25...0.125	-0.125...0.25	-0.248...0.25	-0.25...0.248	0.001	2	**PY2068**
M12 connector · Output 2 x ⎓ / ⏚ or 1 x ⎓ / ⏚ + analogue · Connector groups 7, 8, 10 · Wiring diagram no. 30									
0...400	600	1000	0...160	100...400	4...400	2...398	1	3	**PN2020**
0...250	400	850	0.0...100.0	62.5...250.0	2.0...250.0	1.0...249.0	0.5	4	**PN2021**
0...100	300	650	0.0...40.0	25.0...100.0	0.8...100.0	0.4...99.6	0.2	4	**PN2022**
-1...25	100	350	-1.00...10.00	5.25...25.00	-0.80...25.00	-0.90...24.90	0.05	4	**PN2023**
-1...10	50	150	-1.00...3.40	1.76...10.00	-0.88...10.00	-0.94...9.94	0.02	4	**PN2024**
-0.13...2.50	20	50	-0.13...1.00	0.50...2.50	-0.11...2.50	-0.12...2.49	0.01	4	**PN2026**
-0.05...1	10	30	-0.05...0.4	0.2...1	-0.046...1	-0.05...0.996	0.002	4	**PN2027**
-1...1	20	50	-0.996...-0.2	-0.5...1	-0.988...1	-0.996...0.992	0.004	4	**PN2009**
-0.5...0.5	10	30	-0.5...-0.1	-0.25...0.5	-0.496...0.5	-0.5...0.496	0.001	4	**PN2069**
-0.0125...0.25	10	30	-0.0125...0.1	0.05...0.25	-0.0105...0.25	-0.0115...0.249	0.0005	4	**PN2028**

Common technical data

Ub: 20...30 V DC
Current consumption: < 60 mA
Current rating: 2 x 250 mA
Switch point accuracy: < ± 0.5
Deviation of the characteristics: < ± 0.6
Load: at 4...20 mA: <= 700 Ohm,
at 0...10 V: > 2 kOhm
Shock resistance: 50 g (11 ms)
Vibration resistance: 20 g (10...2,000 Hz)
Materials (wetted parts):
ceramics, stainless steel (303S21), viton

You can find scale drawings from page 243

PY7 pressure sensors with display — *106 - 107*
PNI pressure sensors with analogue input — *108 - 109*
FDT-Container-Programm — *110 - 111*
EPS parameter-setting systems — *112 - 113*
For hygienic areas and viscous media — *114 - 125*
For hazardous areas — *126 - 127*

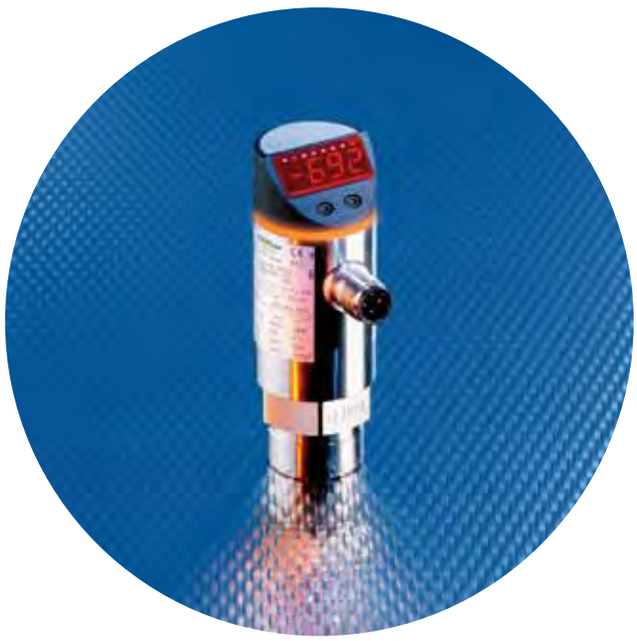

- **Electronic pressure sensor with switching output and analog. output.**
- **4-digit 10-segment display for convenient unit configuration.**
- **Memory for minimum and maximum measured system pressure.**
- **Country-specific pressure units, selectable in bar / mbar, kPa / MPa, psi.**
- **High overload range, maximum long-term stability.**









Accessories

Type	Description	Order no.
	Adapter, G 1/4 - G 1/2	**E30000**
	Adapter, G 1/4 - G 1/4	**E30007**
	Flange adapter, G 1/4	**E30003**
	Mounting clamp, Ø 34 mm	**E10193**

Connectors and splitter boxes

Type	Description	Order no.
	Socket, M12, Group 7 2 m black, PUR cable	**EVC004**
	Socket, M12, Group 7 5 m black, PUR cable	**EVC005**
	Socket, M12, Group 7 10 m black, PUR cable	**EVC006**
	Socket, M12 wirable	**E11512**

Further accessories are available starting on page 217

Further connectors and splitter boxes are available starting on page 191

	For industrial applications	*PN pressure sensors with display*	*PE pressure sensors / transmitters with display*	*PN / PY pressure sensors / transmitters with display*	*PK pressure sensors with setting rings*	*PP pressure sensors*	*PA / PPA pressure transmitters*	*PS part seat monitoring*
Pressure sensors and transmitters								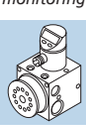
Page		*90 - 91*	*92 - 93*	*94 - 97*	*98 - 99*	*100 - 101*	*102 - 103*	*104 - 105*

Ceramic measuring cell
Process connection G 1/4 female

Measuring range [bar]	$P_{overload}$ max. [bar]	$P_{bursting}$ min. [bar]	Switch-on point SP1 [bar]	Switch-off point rP1 [bar]	In steps of [bar]	Protection	Draw-ing no.	Order no.
M12 connector · Output function 4...20 mA or 0...10 V · Connector groups 7, 8, 10 · Wiring diagram no. 16								
0...600	800	1200	6...600	3...597	3	IP 67	1	**PN3060**
0...400	600	1000	4...400	2...398	2	IP 67	1	**PN3000**
0...250	400	850	2...250	1...249	1	IP 67	2	**PN3001**
0...100	300	650	1.0...100.0	0.5...99.5	0.5	IP 67	2	**PN3002**
0...25	150	350	0.2...25.0	0.1...24.9	0.1	IP 65	2	**PN3003**
-1...10	75	150	-0.90...10.00	-0.95...9.95	0.05	IP 65	2	**PN3004**
0...2.5	20	50	0.02...2.50	0.01...2.49	0.01	IP 65	2	**PN3006**
0...1	10	30	0.01...1	0.005...0.995	0.005	IP 65	2	**PN3007**
-1...0	10	30	-0.99...0	-0.995...-0.005	0.005	IP 65	2	**PN3029**

Common technical data

Ub: 18...36 V DC
Current rating: 250 mA
Load analogue output mA: max. 500 Ohm
Load analogue output V: min. 2000 Ohm
Switch point accuracy: ± 0.5
Materials (wetted parts):
stainless steel (303S21), ceramics, FPM
Shock resistance: 50 g (11 ms)
Vibration resistance: 20 g (10...2,000 Hz)
For further data see:
www. ifm-electronic.com

You can find scale drawings from page 243

PY7 pressure sensors with display — *106 - 107*

PNI pressure sensors with analogue input — *108 - 109*

FDT-Container-Programm — *110 - 111*

EPS parameter-setting systems — *112 - 113*

For hygienic areas and viscous media — *114 - 125*

For hazardous areas — *126 - 127*



- **Easy switch point adjust. by means of 2 setting rings for simple reading.**
- **New stainless steel measuring cell, e.g. for freons in refrigerating technology.**
- **Mechanical lock prevents unintentional manipulation.**
- **High bursting pressure range for gases and liquids.**
- **Ideal for use in accumulator charging in hydraulics and pneumatics.**







Accessories

Type	Description	Order no.
	Flange adapter G 1/4 for pressure sensors type PP7 / type PK	**E30063**
	Damping screw for pressure sensors type PK	**E30057**
	Protective cover, sealable	**E30094**

Connectors and splitter boxes

Type	Description	Order no.
	Socket, M12, Group 7 5 m black, PUR cable	**EVC005**
	Socket, M12, Group 7 10 m black, PUR cable	**EVC006**
	Socket, M12, Group 7 5 m black, PUR cable	**EVC002**
	Socket, M12, Group 7 10 m black, PUR cable	**EVC003**

Further accessories are available starting on page 217

Further connectors and splitter boxes are available starting on page 191

	For industrial applications	*PN pressure sensors with display*	*PE pressure sensors / transmitters with display*	*PN / PY pressure sensors / transmitters with display*	*PK pressure sensors with setting rings*	*PP pressure sensors*	*PA / PPA pressure transmitters*	*PS part seat monitoring*
Pressure sensors and transmitters								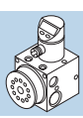
Page		*90 - 91*	*92 - 93*	*94 - 97*	*98 - 99*	*100 - 101*	*102 - 103*	*104 - 105*

Stainless steel measuring cell, welded without sealing ring
Process connection: PK65xx, P75xx: G 1/4 A, PK67xx, PK87xx: R 1/4 A

Measuring range [bar]	$P_{overload}$ max. [bar]	$P_{bursting}$ min. [bar]	Switch-on point SP1 [bar]	Switch-off point rP1 [bar]	Protection	Drawing no.	Order no.
M12 connector · Output function ⎓ / ⏚ complementary PNP · Connector groups 7, 8, 9 · Wiring diagram no. 17							
0...400	600	1600	20...400	12...392	IP 67	5	**PK6520**
0...250	400	1000	12.5...250	7.5...245	IP 67	5	**PK6521**
0...100	200	1000	5...100	3...98	IP 67	5	**PK6522**
0...25	60	500	1.25...25	0.75...24.5	IP 67	5	**PK6523**
0...10	25	300	0.5...10	0.3...9.8	IP 67	5	**PK6524**
M12 connector · Output function ⎓ / ⎓ PNP · Connector groups 7, 8, 9 · Wiring diagram no. 3							
0...400	600	1600	12...400	2 % hysteresis	IP 67	5	**PK7520**
0...250	400	1000	7.5...250	2 % hysteresis	IP 67	5	**PK7521**
0...100	200	1000	3...100	2 % hysteresis	IP 67	5	**PK7522**
0...10	25	300	0.3...10	2 % hysteresis	IP 67	5	**PK7524**
M12 connector · Output function ⎓ / ⏚ complementary PNP · Connector groups 7, 8, 9 · Wiring diagram no. 17							
0...400	600	1600	20...400	12...392	IP 67	6	**PK6730**
0...250	400	1000	12.5...250	7.5...245	IP 67	6	**PK6731**
0...100	200	1000	5...100	3...98	IP 67	6	**PK6732**
0...10	25	300	0.5...10	0.3...9.8	IP 67	6	**PK6734**
M12 connector · Output function ⎓ / ⏚ complementary NPN · Connector groups 7, 8, 9 · Wiring diagram no. 18							
0...400	600	1600	20...400	12...392	IP 67	6	**PK8730**
0...250	400	1000	12.5...250	7.5...245	IP 67	6	**PK8731**
0...100	200	1000	5...100	3...98	IP 67	6	**PK8732**
0...10	25	300	0.5...10	0.3...9.8	IP 67	6	**PK8734**

Common technical data

Ub: 9.6...32 V DC
Current consumption: < 25 mA
Current rating: 500 mA
Switch point accuracy: < ± 2.5 %
Repeatability: < ± 0.5 %
Shock resistance: 50 g (11 ms)
Vibration resistance: 20 g (10...2,000 Hz)
Materials (wetted parts):
high-grade stainless steel (316S12);
FPM (Viton)

You can find scale drawings from page 243

PY7 pressure sensors with display — *106 - 107*
PNI pressure sensors with analogue input — *108 - 109*
FDT-Container-Programm — *110 - 111*
EPS parameter-setting systems — *112 - 113*
For hygienic areas and viscous media — *114 - 125*
For hazardous areas — *126 - 127*

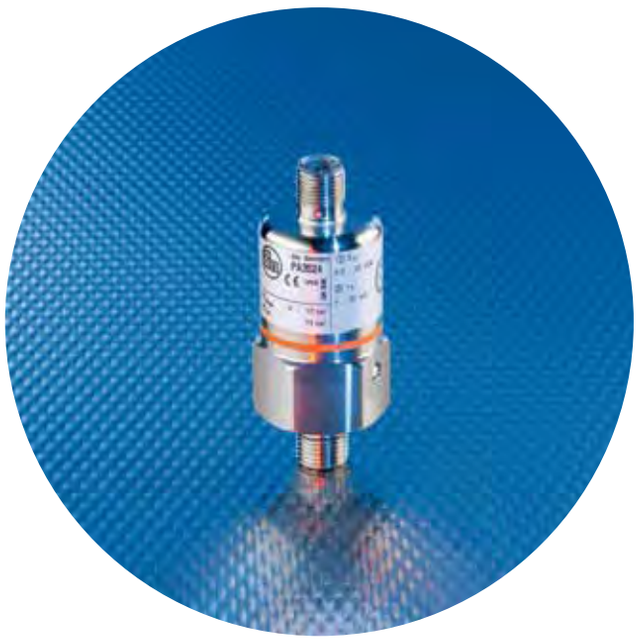

- **Pressure sensor for mobile use, shock resistant up to 1000 g.**
- **1 switching output and remote setting function.**
- **2 switching outputs freely configurable.**
- **Excellent EMC resistance e.g. 100 V/m.**
- **Optional parameter setting and documentation via PC connection.**









Accessories

Type	Description	Order no.
	Programming and display unit for EPS sensors	**PP2000**
	Teach button	**E30051**
	EPS service system	**ZZ0050**
	Flange adapter G 1/4 for pressure sensors type PP7 / type PK	**E30063**

Connectors and splitter boxes

Type	Description	Order no.
	Socket, M12, Group 7 2 m black, PUR cable	**EVC004**
	Socket, M12, Group 7 5 m black, PUR cable	**EVC005**
	Socket, M12, Group 7 10 m black, PUR cable	**EVC006**

Further accessories are available starting on page 217

Further connectors and splitter boxes are available starting on page 191

	For industrial applications	PN pressure sensors with display	PE pressure sensors / transmitters with display	PN / PY pressure sensors / transmitters with display	PK pressure sensors with setting rings	PP pressure sensors	PA / PPA pressure transmitters	PS part seat monitoring
Pressure sensors and transmitters								
Page		*90 - 91*	*92 - 93*	*94 - 97*	*98 - 99*	*100 - 101*	*102 - 103*	*104 - 105*

Approvals: e1
Ceramic measuring cell, Process connection G 1/4 male
For gaseous media up to 25 bar

Measuring range [bar]	$P_{overload}$ max. [bar]	$P_{bursting}$ min. [bar]	Switch-on point SP1 [bar]	Switch-off point rP1 [bar]	In steps of [bar]	Protection	Drawing no.	Order no.
M12 connector · Output function 2 x ⎓ / ⎓ · Connector groups 7, 8, 9 · Wiring diagram no. 37								
0...400	600	1000	4...400	2...398	1	IP 68 / IP 69 K	7	**PP7530**
0...250	400	850	3...250	2...249	1	IP 68 / IP 69 K	7	**PP7531**
0...100	300	650	1.0...99.9	0.5...99.5	0.1	IP 68 / IP 69 K	7	**PP7532**
0...25	100	350	0.3...25.0	0.2...24.9	0.1	IP 68 / IP 69 K	7	**PP7533**
0...10	50	150	0.10...9.99	0.05...9.94	0.01	IP 68 / IP 69 K	7	**PP7534**

Common technical data

Ub: 9.6...30 V DC
Current rating: 250 mA
Current consumption: < 45
Accuracy of switch point: < ±1.5
Material (wetted parts): stainless steel (303S22), ceramics, FPM (Viton)
Shock resistance: 1,000 g
Vibration resistance: 20 g (10...2,000 Hz)
For further data see:
www.ifm-electronic.com

You can find scale drawings from page 243

PY7 pressure sensors with display — *106 - 107*

PNI pressure sensors with analogue input — *108 - 109*

FDT-Container-Programm — *110 - 111*

EPS parameter-setting systems — *112 - 113*

For hygienic areas and viscous media — *114 - 125*

For hazardous areas — *126 - 127*



- **Pressure transmitter with analogue output 4...20 mA or 0...10 V.**
- **High overload resistance especially in the low pressure range.**
- **Robust design, therefore resistant to shock and vibration.**
- **Versions with AS-i slave according to the profile S-7.3.C.**
- **Flexible process connection by commonly used fittings.**

IP 65 / IP 67 | Stainless steel | e1

Accessories

Type	Description	Order no.
	Adapter, G 1/4 - G 1/2	**E30000**
	Adapter, G 1/4 - G 1/4	**E30007**
	FC insulation displacement connector for order No. PPA020, PPA024, PPA060	**E70096**
	Flange adapter, G 1/4	**E30003**
	Mounting clamp for types M30	**E10077**

Connectors and splitter boxes

Type	Description	Order no.
	Socket, M12, Group 7 2 m black, PUR cable	**EVC004**
	Socket, M12, Group 7 5 m black, PUR cable	**EVC005**
	Socket, M12, Group 7 10 m black, PUR cable	**EVC006**
	Socket, M12 wirable	**E11512**

Further accessories are available starting on page 217

Further connectors and splitter boxes are available starting on page 191

	For industrial applications	PN pressure sensors with display	PE pressure sensors / transmitters with display	PN / PY pressure sensors / transmitters with display	PK pressure sensors with setting rings	PP pressure sensors	PA / PPA pressure transmitters	PS part seat monitoring
Pressure sensors and transmitters								
Page		*90 - 91*	*92 - 93*	*94 - 97*	*98 - 99*	*100 - 101*	*102 - 103*	*104 - 105*



Ceramic measuring cell
Process connection G 1/4 female, PA35xx: G 1/4 male; PA3228: 1/4'' NPT
Approvals: e1 type approval

Measuring range [bar]	$P_{overload}$ max. [bar]	$P_{bursting}$ min. [bar]	Medium temperature [°C]	Protection	U_b [V]	Drawing no.	Order no.
M12 connector · Output function 4...20 mA analogue · Connector groups 7, 8 · Wiring diagram no. 19							
0...600	800	1200	-25...90	IP 68 / IP 69 K	9.6...32	8	**PA3060**
0...400	600	1000	-25...90	IP 68 / IP 69 K	9.6...32	8	**PA3020**
0...250	400	850	-25...90	IP 68 / IP 69 K	9.6...32	9	**PA3021**
0...100	300	650	-25...90	IP 68 / IP 69 K	9.6...32	9	**PA3022**
0...25	150	350	-25...90	IP 65	9.6...32	9	**PA3023**
0...10	75	150	-25...90	IP 65	9.6...32	9	**PA3024**
0...2.5	20	50	-25...90	IP 65	9.6...32	9	**PA3026**
0...1	10	30	-25...90	IP 65	9.6...32	9	**PA3027**
-1...0	10	30	-25...90	IP 65	9.6...32	9	**PA3029**
0...0.25	10	30	-25...90	IP 65	9.6...32	10	**PA3228**
0...250	150	350	-25...90	IP 65	9.6...32	11	**PA3521**
0...100	150	350	-25...90	IP 65	9.6...32	11	**PA3522**
0...25	150	350	-25...90	IP 65	9.6...32	11	**PA3523**
0...10	75	150	-25...90	IP 65	9.6...32	11	**PA3524**
M12 connector · Output function 0...10 V analogue · Connector groups 7, 8 · Wiring diagram no. 20							
0...400	600	1000	-25...90	IP 68 / IP 69 K	16...32 DC	8	**PA9020**
0...250	400	850	-25...90	IP 68 / IP 69 K	16...32 DC	9	**PA9021**
0...100	300	650	-25...90	IP 68 / IP 69 K	16...32 DC	9	**PA9022**
0...25	150	350	-25...90	IP 65	16...32 DC	9	**PA9023**
0...10	75	150	-25...90	IP 65	16...32 DC	9	**PA9024**
0...2.5	20	50	-25...90	IP 65	16...32 DC	9	**PA9026**
0...1	10	30	-25...90	IP 65	16...32 DC	9	**PA9027**
M12 connector · Output function AS-i · Connector groups 7, 8 · Wiring diagram no. 21							
0...400	600	1000	-25...80	IP 67	26.5...31.6 DC	12	**PPA020**
0...10	50	150	-25...80	IP 65	26.5...31.6 DC	13	**PPA024**
0...600	800	1200	-25...80	IP 67	26.5...31.6 DC	12	**PPA060**

Common technical data

Current consumption PA90xxx: < 18 mA
Load analog output
PA 30..: 660 Ohm / 24 V
Load analog output PA 90..: min. 5 kOhm
Material (wetted parts): stainless steel (303S22), ceramics, FPM (Viton)
Shock resistance: 50 g (11 ms)
Vibration resistance: 20 g (10...2,000 Hz)
For further data see:
www.ifm-electronic.com

You can find scale drawings from page 243

PY7 pressure sensors with display — *106 - 107*
PNI pressure sensors with analogue input — *108 - 109*
FDT-Container-Programm — *110 - 111*
EPS parameter-setting systems — *112 - 113*
For hygienic areas and viscous media — *114 - 125*
For hazardous areas — *126 - 127*

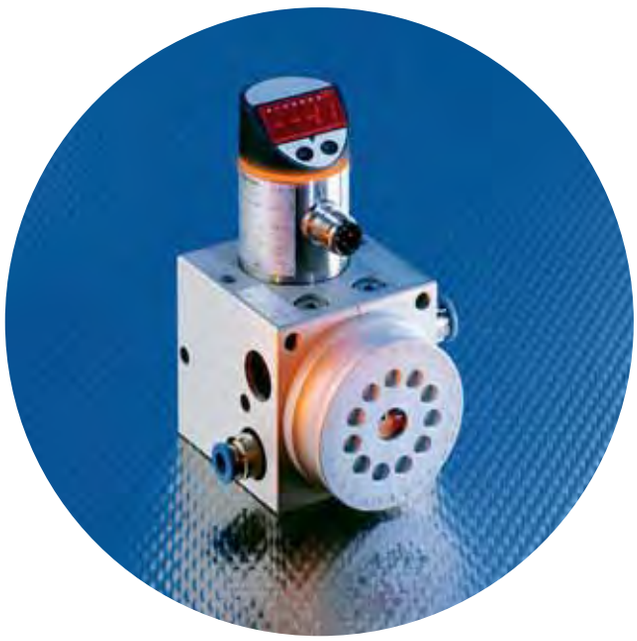

- **PS7 part seat monitoring for precise monitoring with long-term stability.**
- **Adjust. to the desired gap distance by means of mechanical setting dial.**
- **Low supply pressures for process-optimised use.**
- **2 switch points: Fine / coarse detection or additional function check.**
- **Non-contact measurement in the micrometer range.**



Applications

Metal forming and machining to assembly automation, workpiece positioning and gap detection in harsh operating conditions (dirt, fluids extreme temperatures) continue to present a challenge for project engineers.

Whether workpiece or tool, pallet or conical spindle insert – the success of the machining operation depends on a clear position definition with gap distances sometimes down to 0.01 mm.

The pneumatic backpressure measurement system is often used to blow the work surface clean. At the same time the required gap distances are clearly detected and converted into OK signals.

System description

The principle of backpressure measurement converts the distance between the nozzles and the "deflector" (the surface of the seated workpiece) into a suitable pressure signal. This signal is evaluated to generate reliable and high repeatability switch points for even the smallest gaps. One single unit can thus be used universally for a wide range of tasks with different nozzle combinations or diameters and gap distances. Gap distances from 0.01 mm to approx. 0.7 mm can be detected depending on the nozzle combinations.

	For industrial applications	PN pressure sensors with display	PE pressure sensors / transmitters with display	PN / PY pressure sensors / transmitters with display	PK pressure sensors with setting rings	PP pressure sensors	PA / PPA pressure transmitters	PS part seat monitoring
Pressure sensors and transmitters								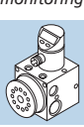
Page		90 - 91	92 - 93	94 - 97	98 - 99	100 - 101	102 - 103	104 - 105

Integrated pressure sensor with ceramic measuring cell
Relative pressure
Backpressure measurement independent of the supply pressure

Supply pressure [bar]	Measurable gap distances [mm]	Max. detection accuracy	Supply pressure connection	Measuring branch connection	Draw-ing no.	Order no.
M12 connector · Output function 2 x ⎓ / ⎓						
1	0.02...0.7	0.01 mm	2 x 1/8" thread for push-in air fitting	3 x 1/8" thread for push-in air fitting	14	**PS7570**

Common technical data

Ub: 20...32 V DC
Switching status: 2 LEDs yellow
LED display: 4-digit alphanumeric or trend display
Current rating: 2 x 250 mA
Switch point accuracy: < ± 0.5 %
Repeatability: < ± 0.1 %
Hysteresis: < ± 0.1 % of the span
Shock resistance: 6 g (11 ms)
Vibration resistance: 6 g (10...100 Hz)

You can find scale drawings from page 243

PY7 pressure sensors with display — *106 - 107*
PNI pressure sensors with analogue input — *108 - 109*
FDT-Container-Programm — *110 - 111*
EPS parameter-setting systems — *112 - 113*
For hygienic areas and viscous media — *114 - 125*
For hazardous areas — *126 - 127*



- Integrated air vent screw for time-critical applications.
- Variable fixing options for surface or wall mounting.
- Flange connection to CETOP with bore holes for several hole patterns.
- Robust, long-term stable design for demanding hydraulics.
- Two switching outputs with selectable diagnostic function.









Accessories

Type	Description	Order no.
	Protective cover, sealable	**E30006**

Connectors and splitter boxes

Type	Description	Order no.
	Socket, M12, Group 7 2 m black, PUR cable	**EVC004**
	Socket, M12, Group 7 5 m black, PUR cable	**EVC005**
	Socket, M12, Group 7 2 m black, PUR cable	**EVC001**
	Socket, M12, Group 7 5 m black, PUR cable	**EVC002**

Further accessories are available starting on page 217

Further connectors and splitter boxes are available starting on page 191

	For industrial applications	*PN pressure sensors with display*	*PE pressure sensors / transmitters with display*	*PN / PY pressure sensors / transmitters with display*	*PK pressure sensors with setting rings*	*PP pressure sensors*	*PA / PPA pressure transmitters*	*PS part seat monitoring*
Pressure sensors and transmitters								
Page		*90 - 91*	*92 - 93*	*94 - 97*	*98 - 99*	*100 - 101*	*102 - 103*	*104 - 105*

2 programmable switching outputs PNP/NPN
Diagnostic function
Process connection: PY700x: 1 x G 1/4 female, 2 x M6; PY703x: 2 x G 1/4 female

Measuring range [bar]	$P_{overload}$ max. [bar]	$P_{bursting}$ min. [bar]	Switch-on point SP1 [bar]	Switch-off point rP1 [bar]	In steps of [bar]	Protection	Draw-ing no.	Order no.
M12 con. · 2 x ⎍ / ⎍ progr. or 1 x ⎍ / ⎍ progr. + 1 x ⎍ · Connector groups 7, 8, 9 · Wiring diagram no. 36								
0...400	450	1000	4...400	2...398	2	IP 67	15	**PY7000**
0...250	400	850	2...250	1...249	1	IP 67	15	**PY7001**
0...100	300	650	1.0...100.0	0.5...99.5	0.5	IP 67	15	**PY7002**
0...25	150	350	0.2...25.0	0.1...24.9	0.1	IP 65	16	**PY7003**
0...100	300	650	1.0...100.0	0.5...99.5	0.5	IP 67	17	**PY7032**

Common technical data

Current consumption: < 50 mA
Operating voltage: 18...36 V DC
Current rating switching output: 250 mA
Power-on delay time: 0.3 s
Repeatability: < ± 0.1 %
Accuracy of switch point: < ± 0.5 %
Operating temperature: -25...80 °C
Shock resistance: 50 g (11 ms)
Vibration resistance: 20 g (10...2000 Hz)
Pressure cycles: 100 Millionen

You can find scale drawings from page 243

PY7 pressure sensors with display — *106 - 107*
PNI pressure sensors with analogue input — *108 - 109*
FDT-Container-Programm — *110 - 111*
EPS parameter-setting systems — *112 - 113*
For hygienic areas and viscous media — *114 - 125*
For hazardous areas — *126 - 127*

General information
List of articles
Level sensors
Flow sensors
Pressure sensors
Temperature sensors
Diagnostic systems
Evaluation systems, power supplies
Connection technology
Accessories
Technical information and customer service



- With analogue input for automatic switch point adjustment.
- Evaluation of external voltage / current values.
- Continuous comparison of set / actual values directly in the sensor.
- Integrated special functions for specific tasks.
- Differential pressure monitoring with separate pressure transmitter possible.









Accessories

Type	Description	Order no.
	Protective cover, sealable	**E30006**
	Mounting clamp, Ø 34 mm	**E10193**
	Adapter, G 1/4 - G 1/2	**E30000**
	Adapter, G 1/4 - G 1/4	**E30007**

Connectors and splitter boxes

Type	Description	Order no.
	Socket, M12, Group 15 2 m black, PUR cable	**E11231**
	Socket, M12, Group 15 5 m black, PUR cable	**E11232**
	Socket, M12, Group 7 2 m black, PUR cable	**EVC004**
	T-splitter box	**E11566**

Further accessories are available starting on page 217

Further connectors and splitter boxes are available starting on page 191

	For industrial applications	PN pressure sensors with display	PE pressure sensors / transmitters with display	PN / PY pressure sensors / transmitters with display	PK pressure sensors with setting rings	PP pressure sensors	PA / PPA pressure transmitters	PS part seat monitoring
Pressure sensors and transmitters								
Page		*90 - 91*	*92 - 93*	*94 - 97*	*98 - 99*	*100 - 101*	*102 - 103*	*104 - 105*

Ceramic measuring cell, process connection G 1/4 female
Analogue input (scaleable)

Measuring range [bar]	$P_{overload}$ max. [bar]	$P_{bursting}$ min. [bar]	Analogue lower end [bar]	Analogue upper end [bar]	Switch-on point SP1 / SP2 [bar]	Switch-off point rP1 / rp2 [bar]	In steps of [bar]	Drawing no.	Order no.
M12 connector · Output function 2 x ⎓ / ⎓ · Connector group 7, 15 · Wiring diagram no. 22									
0...250	400	850	–	–	-62...250	-63...249	1	2	**PNI021**
0...100	300	650	–	–	-24.6...100.0	-25.0...99.6	0.2	2	**PNI022**
0...25	100	350	–	–	-6.2...25.0	-6.3...24.9	0.1	2	**PNI023**
0...10	50	150	–	–	-2.46...10.00	-2.50...9.96	0.02	2	**PNI024**

Common technical data

Ub: 20...30 V DC
Current consumption: < 90 mA
Current rating: 2 x 250 mA
Analogue voltage input: 0...10 V
(input resistance min. 90 kOhm)
Analogue current input: 0/4...20 mA
(load max. 300 Ohm)
Rise time analogue input: 3 ms
Deviation of the characteristics: < ± 0.6 %
Materials wetted parts: ceramics, high-grade stainless steel (316S12), PTFE

You can find scale drawings from page 243

PY7 pressure sensors with display — *106 - 107*
PNI pressure sensors with analogue input — *108 - 109*
FDT-Container-Programm — *110 - 111*
EPS parameter-setting systems — *112 - 113*
For hygienic areas and viscous media — *114 - 125*
For hazardous areas — *126 - 127*



- **Parameter setting and analysis software on FDT/DTM basis.**
- **Data exchange with pressure, temperature, and flow sensors.**
- **Special wizard simplifies necessary settings.**
- **Device configuration, documentation and diagnostics for the entire plant.**
- **Simple point-to-point connection possible.**

FDT | Windows® compatible | Easy-to-use

The FDT Container program from ifm

The FDT framework software, the ifm Container, features a user-friendly user mode. When starting the program, users are supported by a wizard that does all necessary settings for them.

The FDT technology

The FDT technology standardises the communication interface between field devices and the system environment (host). The special feature of this technology is that it is independent of the communication protocol used and the software environment. The user can also freely choose the device to be used and the control system used. In brief: With FDT it is possible to address any unit via any system using any protocol.

	For industrial applications	PN pressure sensors with display	PE pressure sensors / transmitters with display	PN / PY pressure sensors / transmitters with display	PK pressure sensors with setting rings	PP pressure sensors	PA / PPA pressure transmitters	PS part seat monitoring
Pressure sensors and transmitters								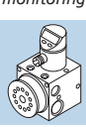
Page		90 - 91	92 - 93	94 - 97	98 - 99	100 - 101	102 - 103	104 - 105

Set article ZZ0050: includes all hardware and software required
FDT framework software: ifm Container

U_b [V]	Current consumption [mA]	Operating temperature [°C]	Interface	Language	Order no.
Set article					
10.8...30	< 80	-20...70	RS-232	–	**ZZ0050**
Parameter setting and analysis software ifm Container					
–	–	–	–	German / English	**E30110**

The following families of units in this catalogue can be analysed and configured using the ifm Container program:

Pressure sensor series:
PN5xxx / PN7xxx, PE7xxx / PE3xxx, PY2068 / PN2xxx, PN3xxx, PP7xxx,
PI2xxx, PI1xxx, PI7xxx, PL2xxx / PM2xxx, PF2xxx, PF00xA

Temperature sensor series:
TADxxx, TR 2432 / TR8430

Flow sensor series:
SD6100

Note:
You can download a continuously updated DTM catalogue from ifm's website.

Common technical data

System requirements for E30110
PC min. Pentium 3 / 700 MHz
min. 256 MB RAM
min. 150 MB free hard disk memory
Microsoft Windows NT / XP
Microsoft Internet Explorer 6.x

You can find scale drawings from page 243

PY7 pressure sensors with display — *106 - 107*
PNI pressure sensors with analogue input — *108 - 109*
FDT-Container-Programm — *110 - 111*
EPS parameter-setting systems — *112 - 113*
For hygienic areas and viscous media — *114 - 125*
For hazardous areas — *126 - 127*



- **Fast and easy handling.**
- **Flexible local indication of the measured values.**
- **Indication in country-specific pressure units, (bar / mbar, kPa / MPa, psi).**
- **Three read-only memories for any duplication of the data records.**
- **Permanent or demand-oriented operation possible.**



Accessories

Type	Description	Order no.
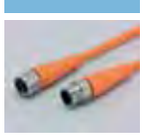	Jumper ifm electronic straight / straight	**E10881**
	Teach button for EPS sensors	**E30051**
	Jumper Bedia straight / angled	**E11274**

Description

The programming and display unit PP2001 enables remote parameter setting and evaluation of sensors of the PP7xxx, PLxxx, PMxxx series. The clearly visible 7-segment LED display provides permanent or demand-oriented information about the current system pressure using the country-specific units. A working memory contains the currently used data record of the connected sensor which can be stored and accessed on request by means of the clearly structured menu navigation.

Due to the voltage supply via the programming and display unit PP2001, an additional external supply of the sensors is not necessary.

Further accessories are available starting on page 217

	For industrial applications	*PN pressure sensors with display*	*PE pressure sensors / transmitters with display*	*PN / PY pressure sensors / transmitters with display*	*PK pressure sensors with setting rings*	*PP pressure sensors*	*PA / PPA pressure transmitters*	*PS part seat monitoring*
Pressure sensors and transmitters								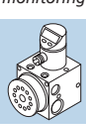
Page		*90 - 91*	*92 - 93*	*94 - 97*	*98 - 99*	*100 - 101*	*102 - 103*	*104 - 105*

Programming and display unit for EPS sensors

U_b [V]	Current consumption [mA]	Operating temperature [°C]	Measuring / display cycle [ms]	Vibration resistance	Protection	Draw-ing no.	Order no.
10.8...30	< 60	-25...80	200	20 (DIN / IEC 68-2-6, 10 - 2000 Hz)	IP 67	18	**PP2000**

You can find scale drawings from page 243

PY7 pressure sensors with display — *106 - 107*
PNI pressure sensors with analogue input — *108 - 109*
FDT-Container-Programm — *110 - 111*
EPS parameter-setting systems — *112 - 113*
For hygienic areas and viscous media — *114 - 125*
For hazardous areas — *126 - 127*

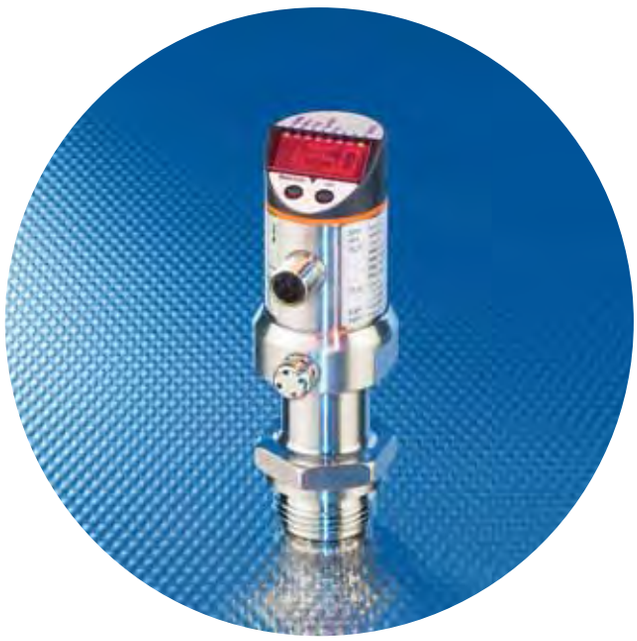

- **Flush sensors for medium temperatures up to 125 °C.**
- **0.2 % measuring accuracy and fast temperature compensation.**
- **Determination of zero point and measuring range via teach button.**
- **O-ring free sealing concept for maintenance-free long-term operation.**
- **Optional parameter setting and documentation via PC connection.**

EHEDG certified | 3A standard | FDA | High-grade stainless steel

Accessories

Type	Description	Order no.
	Adapter, G 1 - Clamp ISO2852/1-1.5	**E33601**
	Aseptoflex adapter, DIN11851 - 1.5" / DN40	**E33012**
	Protective cover	**E30101**
	Protective cover	**E30104**
	EPS service system	**ZZ0050**

Connectors and splitter boxes

Type	Description	Order no.
	Socket, M12, Group 58 5 m orange, PVC cable	**EVT004**
	Socket, M12, Group 58 10 m orange, PVC cable	**EVT005**
	Socket, M12, Group 58 5 m orange, PVC cable	**EVT001**
	Socket, M12, Group 58 10 m orange, PVC cable	**EVT002**

Further accessories are available starting on page 217

Further connectors and splitter boxes are available starting on page 191

	For industrial applications	*PN pressure sensors with display*	*PE pressure sensors / transmitters with display*	*PN / PY pressure sensors / transmitters with display*	*PK pressure sensors with setting rings*	*PP pressure sensors*	*PA / PPA pressure transmitters*	*PS part seat monitoring*
Pressure sensors and transmitters								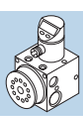
Page		*90 - 91*	*92 - 93*	*94 - 97*	*98 - 99*	*100 - 101*	*102 - 103*	*104 - 105*

Output 1: Switching output programmable
Output 2: Analogue output 4...20 mA / 0...10 V or 20...4 mA / 10...0 V

Measuring range [bar]	$P_{overload}$ max. [bar]	$P_{bursting}$ min. [bar]	Analogue lower end [bar]	Analogue upper end [bar]	Switch-on point SP1 / SP2 [bar]	Switch-off point rP1 / rp2 [bar]	In steps of [bar]	Drawing no.	Order no.
Medium temperature: -25...125 °C (145 °C max. 1h) · Connector groups 58, 59, 61, 64 · Wiring diagram no. 29									
-1.00...25.00	100	350	-1.00...18.74	5.24...25.00	-0.96...25.00	-1.00...24.96	0.02	19	**PI2093**
-1.00...10.00	50	150	-1.00...7.25	1.75...10.00	-0.98...10.00	-1.00...9.98	0.01	19	**PI2094**
-1.000...4.000	30	100	-1.000...3.000	0.00...4.00	-0.990...4.000	-1.000...3.990	0.005	19	**PI2095**
-0.124...2.500	20	50	-0.124...1.880	0.50...2.50	-0.120...2.500	-0.124...2.496	0.002	19	**PI2096**
-0.05...1	10	30	-0.05...0.75	0.2...1	-0.048...1	-0.05...0.998	0.001	19	**PI2097**
-0.0124...0.25	10	30	-0.0124...0.1874	0.05...0.25	-0.012...0.25	-0.0124...0.2496	0.0002	19	**PI2098**
-1...1	10	30	-1...0.5	-0.5...1	-0.998...1	-1...0.998	0.001	19	**PI2099**
-1.0...100.0	200	650	-1.0...75.0	24.0...100.0	-0.8...100.0	-1.0...99.8	0.1	20	**PI2692**
-1.00...25.00	100	350	-1.00...18.74	5.24...25.00	-0.96...25.00	-1.00...24.96	0.02	20	**PI2693**
-1.00...10.00	50	150	-1.00...7.25	1.75...10.00	-0.98...10.00	-1.00...9.98	0.01	20	**PI2694**
-1.000...4.000	30	100	-1.000...2.750	0.25...4.00	-0.990...4.000	-1.000...3.990	0.005	20	**PI2695**
-0.124...2.500	20	50	-0.124...1.880	0.50...2.50	-0.120...2.500	-0.124...2.496	0.002	20	**PI2696**
-0.05...1	10	30	-0.05...0.75	0.2...1	-0.048...1	-0.05...0.998	0.001	20	**PI2697**
-0.0124...0.25	10	30	-0.0124...0.1874	0.05...0.25	-0.012...0.25	-0.0124...0.2496	0.0002	20	**PI2698**
-1...1	10	30	-1...0.5	-0.5...1	-0.998...1	-1...0.998	0.001	20	**PI2699**
-1.00...25.00	100	200	-1.00...18.74	5.24...25.00	-0.96...25.00	-1.00...24.96	0.02	21	**PI2993**
-1.00...10.00	50	150	-1.00...7.25	1.75...10.00	-0.98...10.00	-1.00...9.98	0.01	21	**PI2994**
-1.000...4.000	30	100	-1.000...3.000	0.00...4.00	-0.990...4.000	-1.000...3.990	0.005	21	**PI2995**
-0.124...2.500	20	50	-0.124...1.880	0.50...2.50	-0.120...2.500	-0.124...2.496	0.002	21	**PI2996**
-0.05...1	10	30	-0.05...0.75	0.2...1	-0.048...1	-0.05...0.998	0.001	21	**PI2997**

PI209x: Flush pressure sensors with Aseptoflex adapter thread
PI269x: Flush pressure sensors with G 1A adapter thread
PI299x: Flush pressure sensors with G 3/4A adapter thread
The 3A approval is only valid if adapters with 3A approval are used for installation.

Common technical data

Ub: 18...32 V DC
Accuracy PI20xx and PI26xxx: 0.2 %
Accuracy PI29xx: > 0.2 %
Current rating: 1 x 250 mA
Current consumption: < 50 mA
Deviation of the characteristics: < ± 0.2,
Materials (wetted parts):
high-grade stainless steel (316S12), ceramics 99.9 %, PTFE; Shock resistance: 50 g (11 ms); Vibration resistance: 20 g (10...2,000 Hz); Protection: IP 67 / IP 69K

You can find scale drawings from page 243

PY7 pressure sensors with display 106 - 107
PNI pressure sensors with analogue input 108 - 109
FDT-Container-Programm 110 - 111
EPS parameter-setting systems 112 - 113
For hygienic areas and viscous media 114 - 125
For hazardous areas 126 - 127

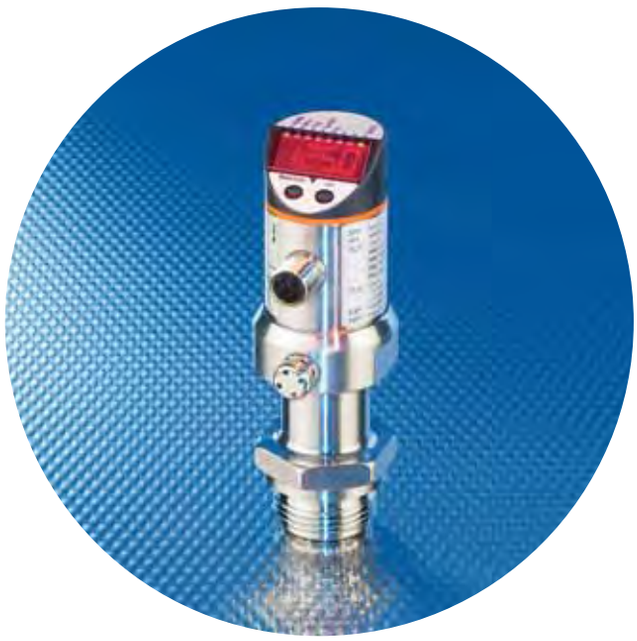

- **Pressure transmitter with LED display in 2-wire connection technology.**
- **Extensive menu functions for a high degree of process safety.**
- **High overall accuracy (0.2 %) and electronic temperature compensation.**
- **Overload resistant and drift-free ceramic measuring cell.**
- **O-ring free sealing concept for maintenance-free long-term operation.**

3A standard | EHEDG certified | FDA | High-grade stainless steel

Accessories

Type	Description	Order no.
	EPS service system	ZZ0050
	Protective cover, stainless steel (320S31), O-ring: Viton	E30101
	Protective cover, stainless steel (320S31), O-ring: EPDM	E30104
	Aseptoflex adapter, DIN 11864-BKS-3A / DN40	E33108
	Aseptoflex adapter, Clamp 1.5"	E33001

Connectors and splitter boxes

Type	Description	Order no.
	Socket, M12, Group 58 5 m orange, PVC cable	EVT004
	Socket, M12, Group 58 10 m orange, PVC cable	EVT005
	Socket, M12, Group 58 5 m orange, PVC cable	EVT001
	Socket, M12, Group 58 10 m orange, PVC cable	EVT002

Further accessories are available starting on page 217

Further connectors and splitter boxes are available starting on page 191

	For industrial applications	PN pressure sensors with display	PE pressure sensors / transmitters with display	PN / PY pressure sensors / transmitters with display	PK pressure sensors with setting rings	PP pressure sensors	PA / PPA pressure transmitters	PS part seat monitoring
Pressure sensors and transmitters								
Page		90 - 91	92 - 93	94 - 97	98 - 99	100 - 101	102 - 103	104 - 105

Pressure transmitter 4...20 mA
Process connection: PI10xx: Aseptoflex adapter thread; PI16xx: G 1 male optional PC connection

Measuring range [bar]	$P_{overload}$ max. [bar]	$P_{bursting}$ min. [bar]	Analogue lower end [bar]	Analogue upper end [bar]	Switch-on point SP1 / SP2 [bar]	Switch-off point rP1 / rp2 [bar]	In steps of [bar]	Drawing no.	Order no.
Medium temperature: -25...125 °C (145 °C max. 1h) · Connector groups 58, 59, 61, 64 · Wiring diagram no. 31									
-1.00...25.00	100	350	-1.00...18.74	5.24...25.00	–	–	0.02	19	**PI1093**
-1.00...10.00	50	150	-1.00...7.25	1.75...10.00	–	–	0.01	19	**PI1094**
-1.000...4.000	30	100	-1.00...3.00	0.00...4.00	–	–	0.005	19	**PI1095**
-0.124...2.500	20	50	-0.124...1.880	0.50...2.50	–	–	0.002	19	**PI1096**
-0.05...1	10	30	-0.05...0.75	0.2...1	–	–	0.001	19	**PI1097**
-0.0124...0.25	10	30	-0.0124...0.1874	0.05...0.25	–	–	0.00002	19	**PI1098**
-1...1	10	30	-1...0.5	-0.5...1	–	–	0.001	19	**PI1099**
-1.00...25.00	100	350	-1.00...18.74	5.24...25.00	–	–	0.02	20	**PI1693**
-1.00...10.00	50	150	-1.00...7.25	1.75...10.00	–	–	0.01	20	**PI1694**
-1.000...4.000	30	100	-1.000...3.000	0.00...4.00	–	–	0.005	20	**PI1695**
-0.124...2.500	20	50	-0.124...1.880	0.50...2.00	–	–	0.002	20	**PI1696**
-0.05...1	10	30	-0.05...0.75	0.2...1	–	–	0.001	20	**PI1697**
-0.0124...0.25	10	30	-0.0124...0.1874	0.05...0.25	–	–	0.00002	20	**PI1698**
-1...1	10	30	-1...0.5	-0.5...1	–	–	0.001	20	**PI1699**

The 3A approval is only valid if adapters with 3A approval are used for installation.

Common technical data

Operating voltage: 20...32 V DC
Characteristics deviation: 0.2 %
Repeatability: 0.1 %
Operating temperature: -25..80 °C
Load for analogue output: max. 300 Ohm
Materials (wetted parts): stainless steel (316S16), ceramics (99.9 % Al2 O3), PTFE
Protection: IP 67 / IP 69K

You can find scale drawings from page 243

PY7 pressure sensors with display — *106 - 107*
PNI pressure sensors with analogue input — *108 - 109*
FDT-Container-Programm — *110 - 111*
EPS parameter-setting systems — *112 - 113*
For hygienic areas and viscous media — *114 - 125*
For hazardous areas — *126 - 127*

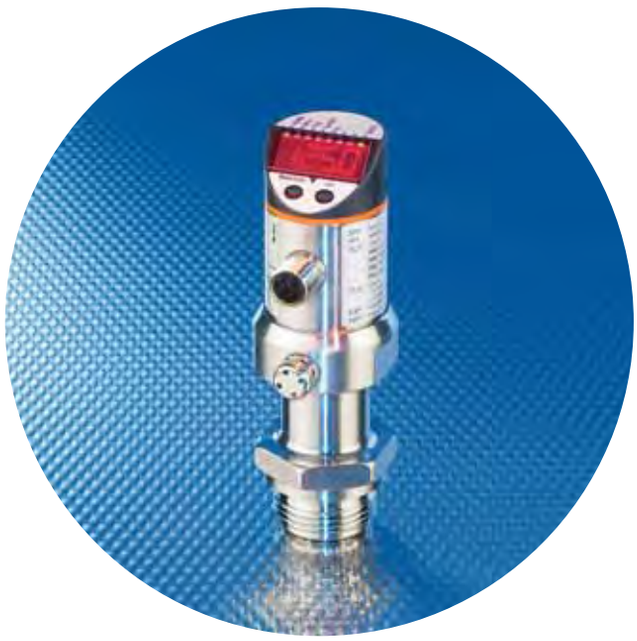

- **Flush pressure sensor with 2 independent switching outputs**
- **0.2 % measuring accuracy and fast temperature compensation.**
- **O-ring free sealing concept for maintenance-free long-term operation.**
- **Optional parameter setting and documentation via PC connection.**
- **Overload resistant and drift-free ceramic measuring cell.**

3A standard | EHEDG certified | FDA | High-grade stainless steel

Accessories

Type	Description	Order no.
	EPS service system	ZZ0050
	Protective cover, stainless steel (320S31), O-ring: Viton	E30101
	Protective cover, stainless steel (320S31), O-ring: EPDM	E30104

Connectors and splitter boxes

Type	Description	Order no.
	Socket, M12, Group 58 5 m orange, PVC cable	EVT004
	Socket, M12, Group 58 10 m orange, PVC cable	EVT005
	Socket, M12, Group 58 5 m orange, PVC cable	EVT001
	Socket, M12, Group 58 10 m orange, PVC cable	EVT002

Further accessories are available starting on page 217

Further connectors and splitter boxes are available starting on page 191

	For industrial applications	PN pressure sensors with display	PE pressure sensors / transmitters with display	PN / PY pressure sensors / transmitters with display	PK pressure sensors with setting rings	PP pressure sensors	PA / PPA pressure transmitters	PS part seat monitoring
Pressure sensors and transmitters								
Page		*90 - 91*	*92 - 93*	*94 - 97*	*98 - 99*	*100 - 101*	*102 - 103*	*104 - 105*



2 switching outputs or 1 switching output and 1 diagnostic output selectable
Process connection: PI70xx: Aseptoflex adapter thread, PI76xx: G 1 male, PI79xx: G 3/4 male

Measuring range [bar]	$P_{overload}$ max. [bar]	$P_{bursting}$ min. [bar]	Analogue lower end [bar]	Analogue upper end [bar]	Switch-on point SP1 / SP2 [bar]	Switch-off point rP1 / rp2 [bar]	In steps of [bar]	Drawing no.	Order no.
Medium temperature: -25...125 °C (145 °C max. 1h) · Connector groups 58, 61 · Wiring diagram no. 36									
-1.00...25.00	100	350	–	–	-0.96...25.00	-1.00...24.96	0.02	19	**PI7093**
-1.00...10.00	50	150	–	–	-0.98...10.00	-1.00...9.98	0.01	19	**PI7094**
-0.124...2.500	20	50	–	–	-0.120...2.500	-0.124...2.496	0.002	19	**PI7096**
-1.00...25.00	100	350	–	–	-0.96...25.00	-1.00...24.96	0.02	21	**PI7993**

The 3A approval is only valid if adapters with 3A approval are used for installation.

Common technical data

Ub: 18...32 V DC
Switch point accuracy: 0.2 %
Deviation of the characteristics: 0.2 %
Current rating: 2 x 250 mA
Current consumption: < 50 mA
Materials (wetted parts): high-grade stainless steel (316S12) ceramics 99.9 %, PTFE
Shock resistance: 50 g (11 ms)
Vibration resistance: 20 g (10...2000 Hz)
Protection: IP 67 / IP 69K

You can find scale drawings from page 243



- **Pressure sensor with diagnostic function for pumps.**
- **Diagnosis of disturbance in the suction area (e.g. cavitation).**
- **Outgassing liquids and air trapped in the pump are detected.**
- **Independ. system-pressure monitoring with second binary switching output.**
- **As an alternative: pump control by analogue output.**

Al_2O_3 99.9 % | FDA | EHEDG certified | FDT

Accessories

Type	Description	Order no.
	Aseptoflex adapter, Clamp 1.5"	**E33001**
	Aseptoflex adapter, Clamp 2"	**E33002**
	Welding adapter, Ø 50 mm	**E30052**
	Welding adapter, G 1 - Ø 50 mm	**E30013**
	EPS service system For order No. PIMxxx	**ZZ0050**

Connectors and splitter boxes

Type	Description	Order no.
	Socket, M12, Group 58 5 m orange, PVC cable	**EVT004**
	Socket, M12, Group 58 10 m orange, PVC cable	**EVT005**
	Socket, M12, Group 58 5 m orange, PVC cable	**EVT001**
	Socket, M12, Group 58 10 m orange, PVC cable	**EVT002**

Further accessories are available starting on page 217

Further connectors and splitter boxes are available starting on page 191

	For industrial applications	*PN pressure sensors with display*	*PE pressure sensors / transmitters with display*	*PN / PY pressure sensors / transmitters with display*	*PK pressure sensors with setting rings*	*PP pressure sensors*	*PA / PPA pressure transmitters*	*PS part seat monitoring*
Pressure sensors and transmitters								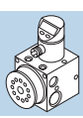
Page		*90 - 91*	*92 - 93*	*94 - 97*	*98 - 99*	*100 - 101*	*102 - 103*	*104 - 105*

Sensors for pump diagnosis and monitoring of the system pressure
Process connection: PIM09x: Asepteoflex thread; PIM69x: G 1 male

Measuring range [bar]	$P_{overload}$ max. [bar]	$P_{bursting}$ min. [bar]	Analogue lower end [bar]	Analogue upper end [bar]	Switch-on point SP1 / SP2 [bar]	Switch-off point rP1 / rp2 [bar]	In steps of [bar]	Drawing no.	Order no.
Combined sensor for pump diagnosis and pressure monitoring · Connector groups 44, 45, 49									
-1.00...25.00	100	350	-1.00...18.74	5.24...25.00	-0.96...25.00	-1.00...24.96	0.02	19	**PIM093**
-1.00...10.00	50	150	-1.00...7.25	1.50...10.00	-0.98...10.00	-1.00...9.98	0.01	19	**PIM094**
-1.00...25.00	100	350	-1.00...18.74	5.24...25.00	-0.96...25.00	-1.00...24.96	0.02	20	**PIM693**
-1.00...10.00	50	150	-1.00...7.25	1.50...10.00	-0.98...10.00	-1.00...9.98	0.01	20	**PIM694**

The 3A approval is only valid if adapters with 3A approval are used for installation.

Common technical data

Operating voltage: 18...32 V DC
Current rating: 250 mA
Permissible overl. pressure:
PIM094, PIM694: 50 bar;
PIM093,PIM693: 100 bar
Bursting pressure:
PIM094, PIM694: 150 bar;
PIM093,PIM693: 350 bar
Accuracy of switch point: 0.2 %
Characteristics deviation: 0.2 %
Protection: IP 67 / IP 69K

You can find scale drawings from page 243

PY7 pressure sensors with display — *106 - 107*
PNI pressure sensors with analogue input — *108 - 109*
FDT-Container-Programm — *110 - 111*
EPS parameter-setting systems — *112 - 113*
For hygienic areas and viscous media — *114 - 125*
For hazardous areas — *126 - 127*



- **Flush sensors for integration in aseptic processes.**
- **0.6 % measuring accuracy.**
- **Maintenance-free over the whole life cycle – climate-proof (potted housing).**
- **O-ring free sealing concept for maintenance-free long-term operation.**
- **Overload resistant & drift-free ceramic measuring cell with highest purity.**

Accessories

Type	Description	Order no.
	EPS service system	**ZZ0050**
	Aseptoflex adapter, Clamp 1.5"	**E33001**
	Aseptoflex adapter, DIN11851 - 1.5" / DN40	**E33012**
	Aseptoflex adapter, Varivent D68	**E33022**

Connectors and splitter boxes

Type	Description	Order no.
	Socket, M12, Group 58 5 m orange, PVC cable	**EVT004**
	Socket, M12, Group 58 10 m orange, PVC cable	**EVT005**
	Socket, M12, Group 58 5 m orange, PVC cable	**EVT001**
	Socket, M12, Group 58 10 m orange, PVC cable	**EVT002**

Further accessories are available starting on page 217

Further connectors and splitter boxes are available starting on page 191

	For industrial applications	*PN pressure sensors with display*	*PE pressure sensors / transmitters with display*	*PN / PY pressure sensors / transmitters with display*	*PK pressure sensors with setting rings*	*PP pressure sensors*	*PA / PPA pressure transmitters*	*PS part seat monitoring*
Pressure sensors and transmitters								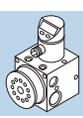
Page		*90 - 91*	*92 - 93*	*94 - 97*	*98 - 99*	*100 - 101*	*102 - 103*	*104 - 105*



Analogue output: 4...20 mA (scaleable)
Process connection: PL / PM20xx: Aseptoflex adapter thread, PL / PM26xx: G 1A

Measuring range [bar]	$P_{overload}$ max. [bar]	$P_{bursting}$ min. [bar]	Analog lower end [bar]	Analog upper end [bar]	In steps of [bar]	Protection	Drawing no.	Order no.
Medium temperature: -25...80 °C · Connector groups 58, 61 · Wiring diagram no. 38								
-1.0...25	100	350	-1.0...18.8	5.3...25.0	0.1	IP 67	22	**PL2053**
-0.5...10	50	150	-0.50...7.49	2.0...9.99	0.01	IP 67	22	**PL2054**
-0.13...2.50	20	50	-0.13...1.88	0.50...2.50	0.01	IP 67	22	**PL2056**
-0.05...0.001	10	30	-0.05...0.749	0.2...0.999	0.001	IP 67	22	**PL2057**
-0.0125...0.25	10	30	-0.0125...0.1	0.05...0.25	0.0005	IP 67	22	**PL2058**
-0.0125...0.25	10	30	-0.0125...0.1	0.05...0.25	0.0005	IP 67	23	**PL2658**
-0.05...1	10	30	-0.05...0.749	0.2...0.999	0.001	IP 67	23	**PL2657**
-0.13...2.50	20	50	-0.13...1.88	0.50...2.50	0.01	IP 67	23	**PL2656**
-0.5...10	50	150	-0.50...7.49	2.0...9.99	0.01	IP 67	23	**PL2654**
-1.0...25	100	350	-1.0...18.8	5.3...25.0	0.1	IP 67	23	**PL2653**
-1...100	200	650	-1.0...75.0	24.0...100.0	0.1	IP 67	24	**PL2652**
Medium temperature: -25...125 °C (145 °C max. 1h) · Connector groups 58, 61 · Wiring diagram no. 38								
-1...25	100	350	-1.0...18.8	5.3...25.0	0.1	IP 67	25	**PM2053**
-0.5...10	50	150	-0.50...7.49	2.0...9.99	0.01	IP 67	25	**PM2054**
-0.99...4.00	30	100	-0.99...1.00	0.26...4.00	0.01	IP 67	25	**PM2055**
-0.13...2.50	20	50	-0.13...1.88	0.50...2.50	0.01	IP 67	25	**PM2056**
-0.05...0.001	10	30	-0.05...0.749	0.2...0.999	0.001	IP 67	25	**PM2057**
-0.0125...0.25	10	30	-0.0125...0.1	0.05...0.25	0.0005	IP 67	25	**PM2058**
-0.99...4.00	30	100	-0.99...1.00	0.26...4.00	0.01	IP 67	26	**PM2655**
-0.0125...0.25	10	30	-0.0125...0.1	0.05...0.25	0.0005	IP 67	26	**PM2658**
-0.05...0.001	10	30	-0.05...0.749	0.2...0.999	0.001	IP 67	26	**PM2657**
-0.13...2.50	20	50	-0.13...1.88	0.50...2.50	0.01	IP 67	26	**PM2656**
-0.5...10	50	150	-0.50...7.49	2.0...9.99	0.01	IP 67	26	**PM2654**
-1...25	100	350	-1.0...18.8	5.3...25.0	0.1	IP 67	26	**PM2653**

The 3A approval is only valid if adapters with 3A approval are used for installation.

Common technical data

Ub: 14...30 V DC
Load analogue output: 550 Ohm / 24 V
Materials (wetted parts):
high-grade stainless steel (316S12), ceramics 99.9 %, PTFE
Shock resistance: 50 g (11 ms)
Vibration resistance: 20 g (10...2,000 Hz)
For further data see:
www. ifm-electronic.com

You can find scale drawings from page 243

PY7 pressure sensors with display — *106 - 107*
PNI pressure sensors with analogue input — *108 - 109*
FDT-Container-Programm — *110 - 111*
EPS parameter-setting systems — *112 - 113*
For hygienic areas and viscous media — *114 - 125*
For hazardous areas — *126 - 127*




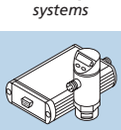



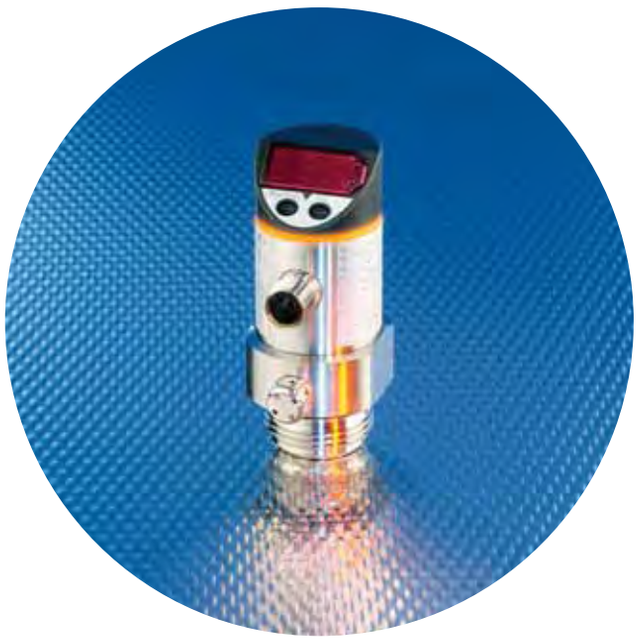

- **Flush sensors for integration in aseptic processes.**
- **0.6 % measuring accuracy.**
- **Maintenance-free over the whole life cycle – climate-proof (potted housing).**
- **O-ring free sealing concept for maintenance-free long-term operation.**
- **Overload resistant & drift-free ceramic measuring cell with highest purity.**

Accessories

Type	Description	Order no.
	Adapter, G 1 - Clamp ISO2852/1-1.5	**E33601**
	Aseptoflex adapter, DIN11851 - 1.5" / DN40	**E33012**
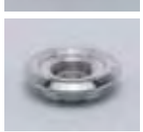	Aseptoflex adapter, Varivent D50	**E33021**
	EPS service system	**ZZ0050**

Connectors and splitter boxes

Type	Description	Order no.
	Socket, M12, Group 58 5 m orange, PVC cable	**EVT004**
	Socket, M12, Group 58 10 m orange, PVC cable	**EVT005**
	Socket, M12, Group 58 5 m orange, PVC cable	**EVT001**
	Socket, M12, Group 58 10 m orange, PVC cable	**EVT002**

Further accessories are available starting on page 217

Further connectors and splitter boxes are available starting on page 191

	For industrial applications	*PN pressure sensors with display*	*PE pressure sensors / transmitters with display*	*PN / PY pressure sensors / transmitters with display*	*PK pressure sensors with setting rings*	*PP pressure sensors*	*PA / PPA pressure transmitters*	*PS part seat monitoring*
Pressure sensors and transmitters								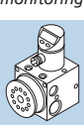
Page		*90 - 91*	*92 - 93*	*94 - 97*	*98 - 99*	*100 - 101*	*102 - 103*	*104 - 105*



Output 1: Switching output programmable
Output 2: Switching output programmable or analogue output 4...20 mA / 0 ...10 V

Measuring range [bar]	$P_{overload}$ max. [bar]	$P_{bursting}$ min. [bar]	Analogue lower end [bar]	Analogue upper end [bar]	Switch-on point SP1 / SP2 [bar]	Switch-off point rP1 / rp2 [bar]	In steps of [bar]	Drawing no.	Order no.
Medium temperature: -25...80 °C · Connector groups 58, 59, 61 · Wiring diagram no. 30									
-1.0...25	100	350	-1.0...18.8	5.3...25.0	-0.8...25.0	-0.9...24.9	0.1	27	**PF2053**
-0.5...10	50	150	-0.50...7.49	2.00...9.99	-0.45...9.99	-0.50...9.94	0.01	27	**PF2054**
-0.13...2.50	20	50	-0.13...1.88	0.50...2.50	-0.11... 2.50	-0.12... 2.49	0.01	27	**PF2056**
-0.05...1	10	30	-0.05...0.749	0.2...0.999	-0.045...0.999	-0.05...0.994	0.001	27	**PF2057**
-0.013...0.25	10	30	-0.013...0.188	0.05...0.25	-0.011...0.25	-0.012...0.249	0.001	27	**PF2058**
-1.0...100	200	650	-1.0...75.0	24.0...100	0.0...100	-0.5...99.5	0.1	28	**PF2652**
-1.0...25	100	350	-1.0...18.8	5.3...25.0	-0.8...25.0	-0.9...24.9	0.1	29	**PF2653**
-0.5...10	50	150	-0.50...7.49	2.00...9.99	-0.45...9.99	-0.50...9.94	0.01	29	**PF2654**
-0.13...2.50	20	50	-0.13...1.88	0.50...2.50	-0.11...2.50	-0.12... 2.49	0.01	29	**PF2656**
-0.05...1	10	30	-0.05...0.749	0.2...0.999	-0.045...0.999	-0.05...0.994	0.001	29	**PF2657**
-0.013...0.25	10	30	-0.013...0.188	0.05...0.25	-0.011...0.25	-0.012...0.249	0.001	29	**PF2658**
-0.99...1.00	20	50	-0.99...-0.20	-0.50...1.00	-0.97...1.00	-0.99...0.98	0.01	29	**PF2609**
-1.0...25	100	200	-1.0...18.8	5.3...25.0	-0.8...25.0	-0.9...24.9	0.1	30	**PF2953**
-0.5...10	50	150	-0.50...7.49	2.00...9.99	-0.45...9.99	-0.50...9.94	0.01	30	**PF2954**
-0.13...2.50	20	50	-0.13...1.88	0.50...2.50	-0.11... 2.50	-0.12 ... 2.49	0.01	30	**PF2956**
-0.05...1	10	30	-0.05...0.749	0.2...0.999	-0.045...0.999	-0.05...0.994	0.001	30	**PF2957**

PF205x: Flush pressure sensors with Aseptoflex adapter thread
PF265x: Flush pressure sensors with G 1A adapter thread
PF295x: Flush pressure sensors with G 3/4A adapter thread
The 3A approval is only valid if adapters with 3A approval are used for installation.

Common technical data

Ub: 20...30 V DC
Current rating: 1 x or 2 x 250 mA
Current consumption: < 60 mA
Deviation of the characteristics: < ± 0.6
Materials (wetted parts): high-grade stainless steel (316S12), ceramics 99.9 %, PTFE
Shock resistance: 50 g (11 ms)
Vibration resistance: 20 g (10...2,000 Hz)
Protection: IP 67
For further data see:
www.ifm-electronic.com

You can find scale drawings from page 243



- **Pressure monitoring in hazardous dust areas – group II category 3D.**
- **Use in hazardous areas according to 94/9/EC (ATEX).**
- **Ceramic-capacitive measuring for maximum robustness.**
- **Drift-free operation for more than 100 million pressure cycles.**
- **Optimum reading of the display even at long distances.**









Accessories

Type	Description	Order no.
	Adapter, G 1/4 - G 1/2	**E30000**
	Adapter, G 1/4 - G 1/4	**E30007**
	Adapter, G 1 - DIN11851/1.5" / DN 40	**E33612**
	Flange adapter, G 1/4	**E30003**
	Welding adapter, G 1 - Ø 50 mm	**E30013**

Connectors and splitter boxes

Type	Description	Order no.
	Socket, M12, Group 7 2 m black, PUR cable	**EVC004**
	Socket, M12, Group 7 5 m black, PUR cable	**EVC005**
	Socket, M12, Group 7 2 m black, PUR cable	**EVC001**
	Socket, M12, Group 7 5 m black, PUR cable	**EVC002**
	Socket, M12, Group 65 2 m blue, PUR / PVC cable	**E10355**
	Socket, M12, Group 65 5 m blue, PUR / PVC cable	**E10356**
	Socket, M12, Group 65 2 m blue, PUR / PVC cable	**E10357**
	Socket, M12, Group 65 5 m blue, PUR / PVC cable	**E10358**

Further accessories are available starting on page 217

Further connectors and splitter boxes are available starting on page 191

	For industrial applications	*PN pressure sensors with display*	*PE pressure sensors / transmitters with display*	*PN / PY pressure sensors / transmitters with display*	*PK pressure sensors with setting rings*	*PP pressure sensors*	*PA / PPA pressure transmitters*	*PS part seat monitoring*
Pressure sensors and transmitters								
Page		*90 - 91*	*92 - 93*	*94 - 97*	*98 - 99*	*100 - 101*	*102 - 103*	*104 - 105*

Ceramic measuring cell
Process connection G 1/4 female, PF003A and PF008A: G 1male
ATEX approval group II, category 3D

Measuring range [bar]	$P_{overload}$ max. [bar]	$P_{bursting}$ min. [bar]	Switch-on point / set [bar]	Switch-off point / reset [bar]	In steps of [bar]	Protection	Draw-ing no.	Order no.
M12 connector · Output function 4...20 mA analog · Connector group 7, 65 · Wiring diagram no. 16								
0...10	50	150	0.10...10.0	0.05...9.95	0.05	IP 65	31	**PN004A**
0...2.5	20	50	0.02...2.50	0.01...2.48	0.01	IP 65	31	**PN006A**
0...1	10	30	0.02...1.00	0.01...0.99	0.01	IP 65	31	**PN007A**
-1...0	10	30	-0.98...-0.03	-0.99...-0.04	0.01	IP 65	31	**PN009A**
M12 connector · Output function 2 x · Connector group 7, 65 · Wiring diagram no. 3								
0...10	50	150	0.10...10.0	0.05... 9.95	0.05	IP 65	31	**PN014A**
0...2.5	20	50	0.02...2.50	0.01...2.48	0.01	IP 65	31	**PN016A**
M12 connector · Output function 2 x or 1 x + analog · Connector group 7, 65 · Wiring diagram no. 30								
-1.0...25	100	350	-0.8...25.0	-0.9...24.9	0.1	IP 67	29	**PF003A**
-0.013...0.25	10000	30	-0.011...0.25	-0.012...0.249	0.001	IP 67	29	**PF008A**

Common technical data

Operating voltage: 20...30 V DC
Current consumption: < 60 mA
Current rating: 250 mA
Operating temperature: -20...60 °C
Load analogue output: max. 500 Ohm
Shock resistance: 50 g
Vibration resistance: 20 g (10...2000 Hz)
Materials (wetted parts):
ceramics, stainless steel (303S21), FPM (Viton)

You can find scale drawings from page 243

PY7 pressure sensors with display — *106 - 107*
PNI pressure sensors with analogue input — *108 - 109*
FDT-Container-Programm — *110 - 111*
EPS parameter-setting systems — *112 - 113*
For hygienic areas and viscous media — *114 - 125*
For hazardous areas — *126 - 127*



Temperature sensors

efector600

Temperature sensors and transmitters

System description 130 - 131
Selection chart 132 - 135

Universal application



Temperature sensors and transmitters for industrial applications

Compact TN sensors with display 136 - 137
Control monitors TR with display 138 - 139
Probe sensors TT / TM 140 - 141
Cable sensors TS / TS ATEX 142 - 143
Temperature transmitters TA / TAA 144 - 145

Special application



Temperature sensors and transmitters for hygienic areas and viscous media

Probe sensors TT / TM 146 - 147
Cable sensors TS 148 - 149
Temperature transmitters TA / TAA 150 - 151
Temperature transmitters TAD 152 - 153



Introduction

The controlling and monitoring of temperatures are amongst the most important measuring tasks in automation and process technology. In process technology for example the right temperature is decisive for the quality and efficiency of the process. In automation technology an exact temperature detection is very important for monitoring installations and as protection against dangerous states. In heating and air conditioning economic and easy operation is not possible without temperature measurement and control.

One of the most important measuring tasks: The right temperature is often decisive for the quality of a product.



Operating principle

The temperature sensors of ifm electronic are based on a Pt100 or Pt1000 resistor. The measured temperature value corresponds to a change in resistance and is converted into an electrical analogue signal. A microprocessor controls the evaluation of the electrical signal. For units with integrated display the current system temperature is indicated directly by means of an LED display.

Local display of the current temperature.





Fast and exact temperature measurement in the process technology.

The microprocessor and the display make process adjustment much easier. The user can set the values for the switch points, hysteresis and measuring range by means of programming buttons even without the system temperature being applied. This enables installation and setup of the system within a few minutes. The values are safely stored in an EEPROM independent of the supply voltage.

Film technology is used for the electronic circuitry. A flexible, temperature-resistant and extremely resistant polyamide film is used as carrier of the SMD components. Together with a special potting method an extreme shock and vibration resistance is achieved.

From sensor to system

A complete temperature measurement system usually consists of several components. The temperature in a medium (for example a liquid) is detected by a sensor and is converted into an electrical measured signal. The mechanical design and the dimensions of the sensors must vary to enable use for different media and measuring points. Depending on the application ifm electronic offers a selection of robust probe sensors or types with connection cables. To indicate and process the measured value the sensor is connected to a separate control monitor. It indicates the measured value on the integrated display. For further processing, freely programmable switching outputs or the conversion into analogue signals are also available for the user. Control tasks are either easily processed "on site" or by a superior process control system.

Variable: Probe sensors enable a flexible installation depth of the sensor into the medium to be measured.



Visit our website: www.ifm-electronic.com

To complete the modular systems, ifm electronic offers compact temperature sensors with integrated control monitors and transmitters without display. These feature excellent response times and high mechanical stability at the same time.

Furthermore, highly precise transmitters with redundant measuring elements are available, monitoring themselves for possible drift.

Due to the long-term stability of these units calibration is no longer required.

Requirements for temperature sensors

The general requirements for a temperature measuring unit depend on the measuring point and the application. In the food industry for example a measuring point requires fast response of the sensor to keep temperature-critical processes within a narrow temperature range. For hygienic reasons flush mounting in the process as well as easy cleanability of the sensors in contact with the medium are important.

In mechanical engineering however a heating process such as hydraulic oil in a power pack can be slower, here factors such as vibration and shock resistance are more important.

To meet the requirements described ifm electronic offers a modular system of sensors, process connections and control monitors. Depending on the requirements the individual components can be selected.

The product range is completed by a variety of accessories, for example mounting clamps, protective covers, protective tubes, fittings, etc.

A configuration tool available on the internet at *www.ifm-electronic.com/temperature* simplifies the selection of the right components and enables the clear representation of the selected temperature measuring system for ordering and / or documentation.

Safety during production

To ensure high quality all components are tested separately after each individual production step. The electronic components are for example tested in circuit directly after placement and the functioning of the circuitry is also tested.

The selection of the housing materials especially takes into account the environmental conditions in industry and also ecological aspects. This is why ifm electronic only uses plastics without cadmium for its housing materials. The high standard of the production technology, i.e. ICs specially developed by ifm for sensor requirements as well as ifm's film technology are the basis for the high reliability of the units.

Parameter setting and analysis

Data sets of individual sensors can be replaced quickly and conveniently by means of the ifm Container program. The software which is based on the innovative FDT technology ensures a clear overview of all parameters and the current process data. Process data and set parameters can be recorded and stored. For archiving on paper this data can be represented by means of standard computer programs and printed. *(For further information see the product pages under FDT Container program).*

Most important element: Control monitors ensure further processing of the temperature signals.



Modular: Various possible combinations of sensors, control monitors and mounting solutions for different applications.

Mounting of sensor with integrated control monitor in the medium using an adapter

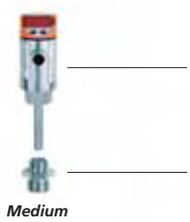

Control monitors
Page 136

Adapters
from page 224

Mounting of temperature transmitter directly in the medium



Temperature transmitters
Page 144

Mounting of temperature transmitter in the medium, directly or using an adapter



Temperature transmitters
Page 144

Adapters
from page 224

Mounting of temperature transmitter in the medium, directly or using a thermowell



Temperature transmitters
Page 144

Thermowells
from page 225

Mounting of probe sensor with connection cable and external control monitor in the medium using an adapter



Control monitors
Page 138

Connection cables
Page 206, 207, 213, 214

Probe sensors
Page 140

Adapters
from page 224

Mounting of probe sensor with connection cable and external control monitor in the medium using an adapter



Control monitors
Page 138

Connection cables
Page 206, 207, 213, 214

Probe sensors
Page 140

Adapters
from page 224

For industrial applications



Mounting of probe sensor with connection cable and external control monitor in the medium using an adapter and thermowell

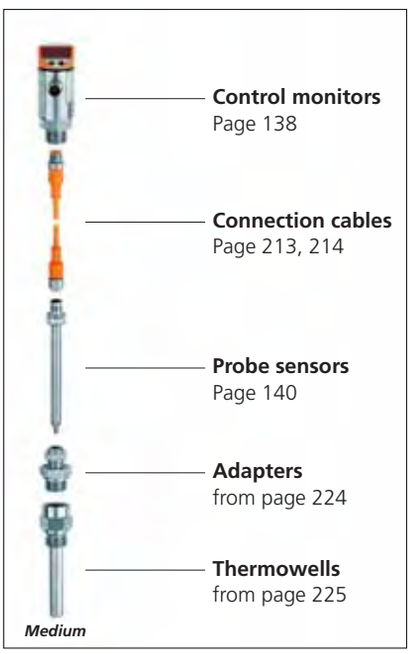

Mounting of probe sensor with mounting set and external control monitor in the medium using an adapter

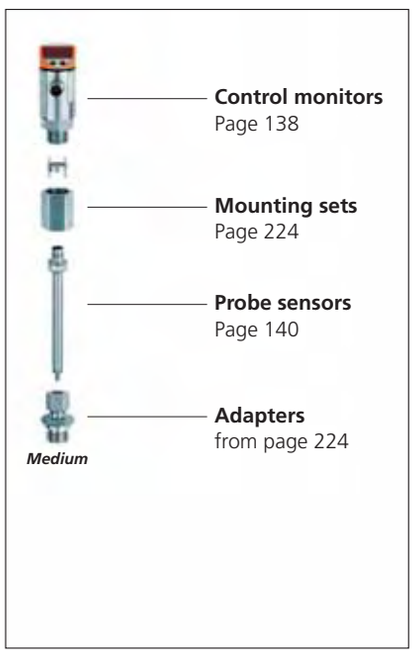

Mounting of probe sensor with mounting set and external control monitor in the medium using an adapter and thermowell

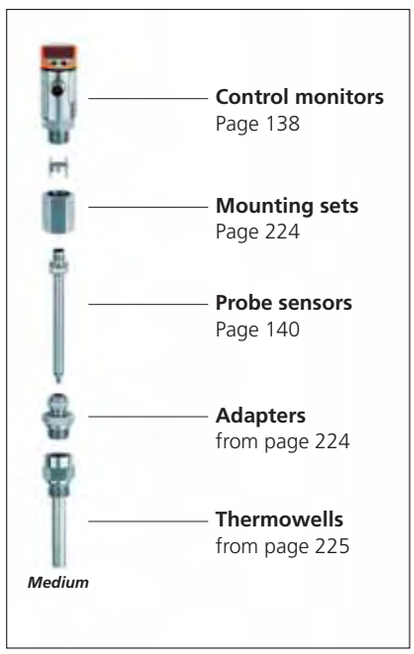

Mounting of cable sensor with external control monitor in the medium using a cable gland and thermowell

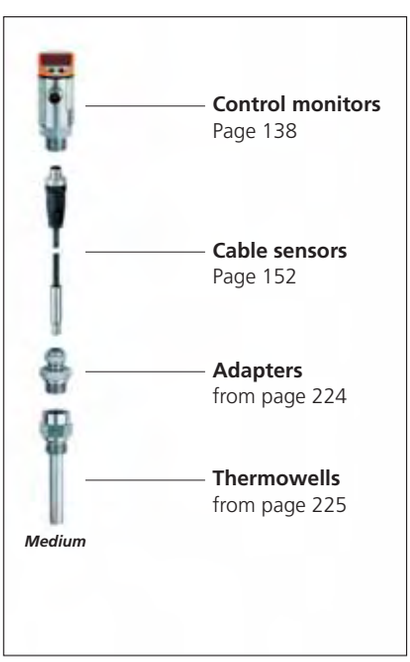

Surface sensor with external control monitor for mounting in solids

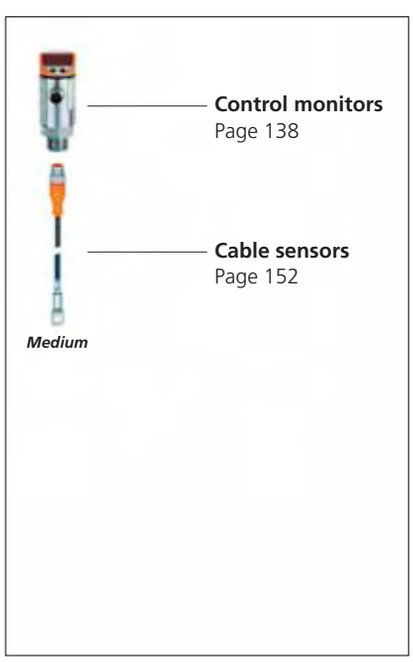

Screw-in sensor with external control monitor for mounting in solids

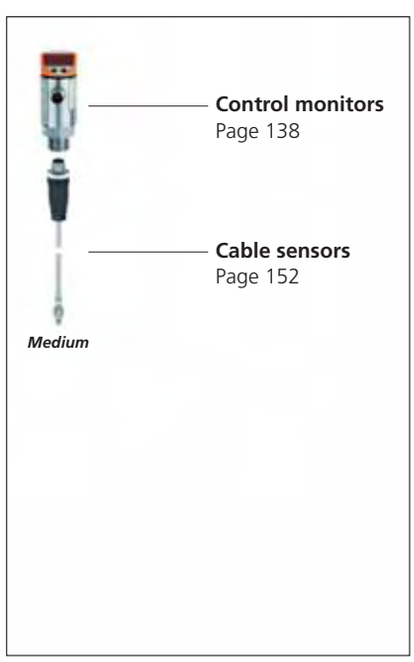

For industrial applications

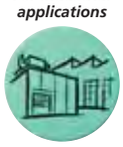

Mounting of temperature transmitter in the medium using an adapter



Temperature transmitters
Page 150

Adapters
from page 224

Mounting of temperature transmitter in the medium using a clamp adapter and a process adapter



Temperature transmitters
Page 150

Adapters
from page 224

Process adapters
from page 225

Mounting of calibration-free temperature transmitter in the medium using a process adapter



Temperature transmitters
Page 152

Process adapters
from page 225

Mounting of probe sensor with mounting set and external control monitor in the medium using a clamp adapter and a welding adapter

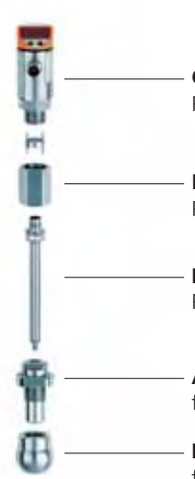

Control monitors
Page 138

Mounting sets
Page 224

Probe sensors
Page 140

Adapters
from page 224

Process adapters
from page 225

Mounting of probe sensor with mounting set and external control monitor in the medium using a clamp adapter and a process adapter



Control monitors
Page 138

Mounting sets
Page 224

Probe sensors
Page 140

Adapters
from page 224

Process adapters
from page 225

Mounting of temperature transmitter in the medium using an adapter



Temperature transmitters
Page 144 / 150

Adapters
from page 224

For hygienic areas and viscous media



Mounting of cable sensor with external control monitor in the medium using a cable gland, thermowell and process adapter

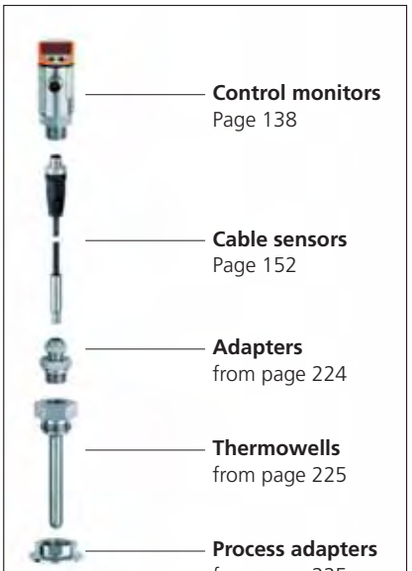

Mounting of probe sensor with connection cable and external control monitor in the medium using a process adapter

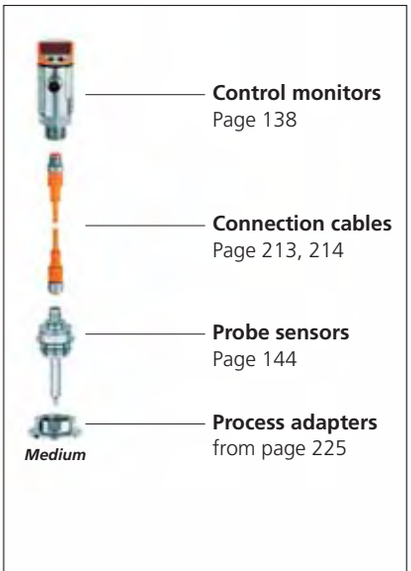

Mounting of probe sensor with mounting set and external control monitor in the medium using a process adapter

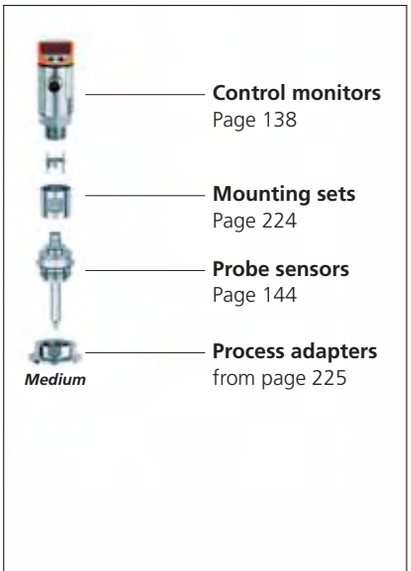

For hygienic areas and viscous media



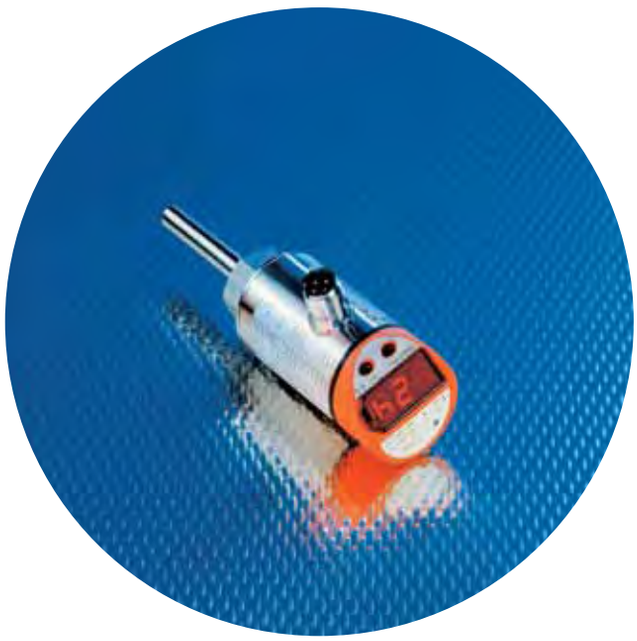

- **Temperature monitoring of liquids and gases.**
- **High-grade stainless steel sensor, resistant to aggressive media.**
- **Rotatable display for system temperature, LEDs for the output status.**
- **Freely programmable hysteresis or window function.**
- **Robust mechanics with high resistance to vibration and shock.**









Accessories

Type	Description	Order no.
	Protective cover, polyurethane (Desmopan), sealable	E30006
	Adapter, M18 x 1.5 - M12 x 1, brass (2.0401), Pressure rating 300 bar	E40100
	Adapter, M18 x 1.5 - M12 x 1, stainless steel (316S12), Pressure rating 300 bar	E40101
	Adapter, M18 x 1.5 - G 1/4, brass (2.0401), Pressure rating 300 bar	E40098
	Adapter, M18 x 1.5 - G 1/4, stainless steel (316S12), Pressure rating 300 bar	E40099
	Adapter, M18 x 1.5 - G 1/2, brass (2.0401), Pressure rating 300 bar	E40097
	Adapter, M18 x 1.5 - G 1/2, stainless steel (316S12), Pressure rating 300 bar	E40096

Connectors and splitter boxes

Type	Description	Order no.
	Socket, M12, Group 7 2 m black, PUR cable	EVC004
	Socket, M12, Group 7 5 m black, PUR cable	EVC005
	Socket, M12, Group 7 2 m black, PUR cable	EVC001
	Socket, M12, Group 7 5 m black, PUR cable	EVC002
	Socket, M12 5 m orange, PVC cable	EVT004
	Socket, M12 10 m orange, PVC cable	EVT005
	Socket, M12 5 m orange, PVC cable	EVT001
	Socket, M12 10 m orange, PVC cable	EVT002

Further accessories are available starting on page 217

Further connectors and splitter boxes are available starting on page 191

	For industrial applications	TN compact sensors with display	TR control monitors with display	TT / TM probe sensors	TS / TS ATEX cable sensors	TA / TAA temperature transmitters	For hygienic areas and viscous media	TT / TM probe sensors
Temperature sensors and transmitters								
Page		136 - 137	138 - 139	140 - 141	142 - 143	144 - 145		146 - 147



System temperature displayed on the unit
Programming via push-button
Integrated watchdog

Setting range switch-on point [°C]	Resolution analog output [°C]	Display	U_b [V]	Current consumption [mA]	I_{load} [mA]	Drawing no.	Order no.
M12 connector · Output function 2 x ⎓ / ⏚ · Connector groups 7, 8, 9 · Wiring diagram no. 3							
-39.5...125	–	2 x red	18...30	< 50	250	1	**TN7530**
M12 connector · Output 1 x ⎓ / ⏚ progr. + 1 x analogue (4...20 mA / 0...10 V) · Connector gr. 7, 8, 10 · Wiring diagr. no. 16							
-39.5...125	0.125	red	20...30	< 66	250	1	**TN2530**

Common technical data

Measuring element: Pt1000
Accuracy of switch point / analog output:
± (Pt1000 + 0.2K) /
± (Pt1000 + 0.2 K + 0.4 %)
Resolution of switch point: 0.5 °C
Resolution of analog output: 0.125 °C
Operating temperature: -25...70 °C
Shock resistance: 50 g (11 ms)
Vibration resistance: 20 g (10...2,000 Hz)
Protection: IP 67, III
Further data see: www.ifm-electronic.com

You can find scale drawings from page 249

TS probe sensors



148 - 149

TA / TAA temperature transmitters



150 - 151

TAD temperature transmitters



152 - 153



- **Control monitor for temperature sensors with local display.**
- **Selection between analogue, binary or combined analogue / binary output.**
- **Connectable to standard Pt100 or Pt1000 temperature sensors.**
- **Freely programmable hysteresis or window function.**
- **Robust mechanics with high resistance to vibration and shock.**









Accessories

Type	Description	Order no.
	Mounting clamp, Ø 34 mm	**E10193**
	Protective cover, sealable	**E30006**
	EPS service system	**ZZ0050**

Connectors and splitter boxes

Type	Description	Order no.
	Jumper, M12 1 m orange, PVC cable	**EVT042**
	Jumper, M12 2 m orange, PVC cable	**EVT043**
	Jumper, M12 2 m black, PUR cable	**EVC018**
	Jumper, M12 5 m black, PUR cable	**EVC019**

Further accessories are available starting on page 217

Further connectors and splitter boxes are available starting on page 191

	For industrial applications	*TN compact sensors with display*	*TR control monitors with display*	*TT / TM probe sensors*	*TS / TS ATEX cable sensors*	*TA / TAA temperature transmitters*	*For hygienic areas and viscous media*	*TT / TM probe sensors*
Temperature sensors and transmitters								
Page		*136 - 137*	*138 - 139*	*140 - 141*	*142 - 143*	*144 - 145*		*146 - 147*

System temperature displayed on the unit
Programming via push-button
Integrated watchdog

Setting range switch-on point [°C]	Resolution analog output [°C]	Display	U_b [V]	Current consumption [mA]	I_{load} [mA]	Drawing no.	Order no.
M12 connector · Output function 2 x ⎓ / ⏚ · Connector groups 7, 8 · Wiring diagram no. 39							
-39.5...150	–	2 x red	18...30	< 50	250	2	**TR7430**
M12 connector · Output function 4 x ⎓ / ⏚ · Connector group 15 · Wiring diagram no. 40							
-39.8...150	–	4 x yellow	18...28	< 90	< 500	3	**TR8430**
M12 connector · Output 1 x ⎓ / ⏚ progr + 1 x analogue (4...20 mA / 0...10 V) · Connector gr. 7, 8, 10 · Wiring diagr. no. 41							
-39.8...300.0	0.1	yellow	20...30	< 55	250	3	**TR2432**

For information about the parameter and analysis software see pages 110 / 111 “ifm Container program”.

Common technical data

Electrical design: DC PNP
Switch point accuracy: ± 0.2 K
(TR2432: ± 0.3 K)
Accuracy analogue output:
± 0.2 K + 0.4 % (TR2432: ± 0.3 K +0.4 %)
Resolution switching output: 0.5 °C
(TR2432: ± 0.1 K)
Resolution analogue output: 0.125 °C
(TR2432: ± 0.1 K)
Operating temperature: -25...70 °C
Further data: www.ifm-electronic.com

You can find scale drawings from page 249

TS probe sensors — *148 - 149*

TA / TAA temperature transmitters — *150 - 151*

TAD temperature transmitters — *152 - 153*



- **Different lengths enable variable installation depth in the medium.**
- **Precise temperature measurement by integrated Pt1000 sensor element.**
- **Thermowell diameter 6 mm, 8 mm and 10 mm.**
- **Connection by means of gold contacts.**
- **Robust mechanics with high resistance to vibration and shock.**









Accessories

Type	Description	Order no.
	Progressive ring fitting for temperature sensors, Ø 10 mm - G 1/2	**E30016**
	Progressive ring fitting for temperature sensors, Ø 8 mm - G 1/2	**E30046**
	Progressive ring fitting for temperature sensors, Ø 6 mm - G 1/2	**E30047**
	Mounting set for direct connection to control monitors TR	**E30017**

Connectors and splitter boxes

Type	Description	Order no.
	Jumper, M12 1 m orange, PVC cable	**EVT042**
	Jumper, M12 2 m orange, PVC cable	**EVT043**
	Jumper, M12 5 m black, PUR cable	**E10884**

Further accessories are available starting on page 217

Further connectors and splitter boxes are available starting on page 191

	For industrial applications	*TN compact sensors with display*	*TR control monitors with display*	*TT / TM probe sensors*	*TS / TS ATEX cable sensors*	*TA / TAA temperature transmitters*	*For hygienic areas and viscous media*	*TT / TM probe sensors*
Temperature sensors and transmitters								
Page		*136 - 137*	*138 - 139*	*140 - 141*	*142 - 143*	*144 - 145*		*146 - 147*

Pt1000 sensor element

Nominal length [mm]	Total length [mm]	Sensor element [mm]	Dynamic response T05 / T09 [s]	Draw-ing no.	Order no.
M12 connector · Connector groups 7, 8 · Wiring diagram no. 23					
Ø 6 mm	160	Pt1000	1 / 3	4	**TT1250**
Ø 6 mm	260	Pt1000	1 / 3	4	**TT2250**
Ø 6 mm	360	Pt1000	1 / 3	4	**TT3250**
Ø 8 mm	160	Pt1000	1 / 3	5	**TT1150**
Ø 8 mm	260	Pt1000	1 / 3	5	**TT2150**
Ø 8 mm	360	Pt1000	1 / 3	5	**TT3150**
Ø 10 mm	160	Pt1000	1 / 3	6	**TT1050**
Ø 10 mm	260	Pt1000	1 / 3	6	**TT2050**
Ø 10 mm	360	Pt1000	1 / 3	6	**TT3050**
Ø 10 mm	560	Pt1000	1 / 3	6	**TT5050**
M12 connector · Knurled nut M18 x 1,5 · Connector groups 7, 8 · Wiring diagram no. 23					
Ø 8.2 mm	44	Pt1000	1 / 3	7	**TM9550**

For evaluation units please see page 138.

Common technical data

Measuring range: -40...150 °C
Measuring element: 1 x Pt1000, class B
Nominal pressure: 160 bar
(The permissible overload pressure
is determined by
the fitting used)
Protection: IP 67, III
Material: high-grade stainless steel (316S12)
Total length: L + 22 mm
TTxxx: accuracy class A
TM9550: accuracy class B

You can find scale drawings from page 249



- **Reliable temperature measurement where space is at a premium**
- **Precise temperature measurement by integrated Pt100 / Pt1000 element.**
- **Sensor diameter 6 mm, 8 mm and 10 mm.**
- **Connection by means of gold contacts.**
- **Robust mechanics with high resistance to vibration and shock.**









Accessories

Type	Description	Order no.
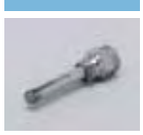	Thermowell for temperature sensors, Ø 10 mm - G 1/2, probe length 82 mm	**E35010**
	Thermowell for temperature sensors, Ø 10 mm - G 1/2, probe length 282 mm	**E35030**
	Thermowell for temperature sensors, Ø 8 mm - G 1/2, probe length 82 mm	**E36010**
	Thermowell for temperature sensors, Ø 8 mm - G 1/2, probe length 282 mm	**E36030**
	Thermowell for temperature sensors, Ø 6 mm - G 1/2, probe length 82 mm	**E37010**
	Thermowell for temperature sensors, Ø 6 mm - G 1/2, probe length 282 mm	**E37030**
	Clamp fitting Ø 6/8/10 mm - G 1/2 for temperature sensors TS / TT	**E30018**

Connectors and splitter boxes

Type	Description	Order no.
	Jumper, M12 1 m orange, PVC cable	**EVT042**
	Jumper, M12 2 m orange, PVC cable	**EVT043**
	Jumper, M12 5 m black, PUR cable	**E10884**
	Plug, M12, Group 36 wirable	**E11504**
	Plug, M12, Group 37 wirable	**E11506**

Further accessories are available starting on page 217

Further connectors and splitter boxes are available starting on page 191

	For industrial applications	*TN compact sensors with display*	*TR control monitors with display*	*TT / TM probe sensors*	*TS / TS ATEX cable sensors*	*TA / TAA temperature transmitters*	*For hygienic areas and viscous media*	*TT / TM probe sensors*
Temperature sensors and transmitters								
Page		*136 - 137*	*138 - 139*	*140 - 141*	*142 - 143*	*144 - 145*		*146 - 147*



Pt100 or Pt1000 sensor element
Cable with connector, Gold-plated contacts
TS335A: ATEX approval group II, category 3D

Sensor diameter [mm]	Connection	Sensor element / class	Measuring range	Dynamic response T05 / T09 [s]	Draw-ing no.	Order no.
Cable with connector · Connector groups 7, 8 · Wiring diagram no. 23						
Ø 6 mm	FPM (Viton) cable; 2 m	Pt1000 / B	-40...150	3 / 10	8	**TS2251**
Ø 8 mm	FPM (Viton) cable; 2 m	Pt1000 / B	-40...150	7 / 18	9	**TS2151**
Ø 8 mm	FPM (Viton) cable; 5 m	Pt1000 / B	-40...150	7 / 18	9	**TS5151**
Ø 10 mm	FPM (Viton) cable; 2 m	Pt1000 / B	-40...150	6 / 25	10	**TS2051**
Ø 10 mm	FPM (Viton) cable; 5 m	Pt1000 / B	-40...150	6 / 25	10	**TS5051**
Ø 6 mm	PTFE cable; 2 m	Pt100 / A	-50...250	11 / 37	11	**TS2256**
Ø 10 mm	PTFE cable; 2 m	Pt100 / A	-50...250	12 / 39	12	**TS2056**
M5	silicone cable; 2 m	Pt100 / B	-30...180	3 / 8	13	**TS2759**
Bolt-on sensor	PUR / PVC cable; 2 m	Pt100 / A	-25...90	9 / 15	14	**TS2229**
M6	silicone cable; 2 m	Pt100 / B	-30...180	3 / 8	15	**TS2659**
ATEX approval: Group II, category 3D · Cable · Wiring diagram no. 24						
Ø 5 mm	silicone cable; 3 m	Pt 100 / B	-20...80 *	6 / 18	16	**TS335A**

For evaluation units please see page 138.

Common technical data

Protection: IP 67, III
Material sensor: high-grade stainless steel (316S12)
TS2229: Housing material:
stainless steel (301 S 22); Cu tin-coated
* Measuring range for standard applications: -20...180 °C

You can find scale drawings from page 249

TS probe sensors — *148 - 149*

TA / TAA temperature transmitters — *150 - 151*

TAD temperature transmitters — *152 - 153*

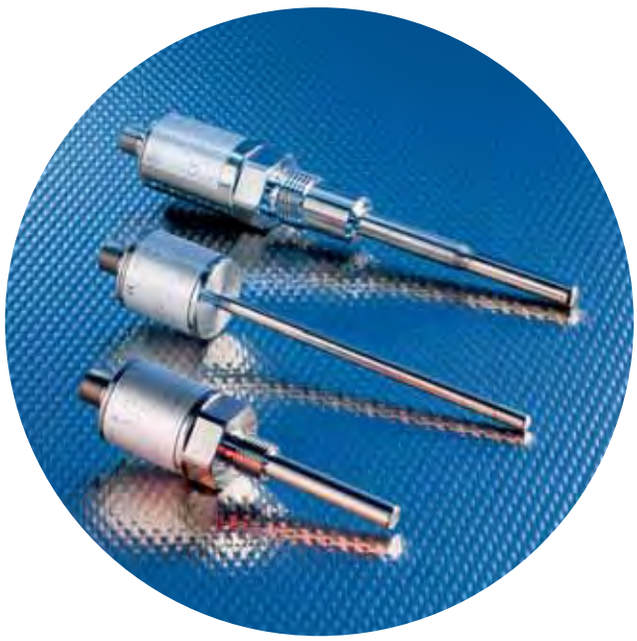

- **Exact temperature transmitter.**
- **4...20 mA analogue output or AS-i slave with profile S-7.3.**
- **Excellent dynamic response.**
- **Robust mechanics with high vibration and shock resistance.**
- **Flexible mounting options.**









Accessories

Type	Description	Order no.
	Welding adapter G 1/2 - Ø 45 mm collar	**E30056**
	Progressive ring fitting for temperature sensors, Ø 10 mm - G 1/2	**E30016**
	Thread cover for types TA	**E30090**
	Clamp adapter Ø 10 mm for temperature sensors Ø 10 mm	**E34110**

Connectors and splitter boxes

Type	Description	Order no.
	Socket, M12, Group 7 2 m black, PUR cable	**EVC004**
	Socket, M12, Group 7 5 m black, PUR cable	**EVC005**
	Socket, M12, Group 7 2 m black, PUR cable	**EVC001**
	Socket, M12, Group 7 5 m black, PUR cable	**EVC002**
	Socket, M12 5 m orange, PVC cable	**EVT004**
	Socket, M12 10 m orange, PVC cable	**EVT005**
	Socket, M12 5 m orange, PVC cable	**EVT001**
	Socket, M12 10 m orange, PVC cable	**EVT002**

Further accessories are available starting on page 217

Further connectors and splitter boxes are available starting on page 191

	For industrial applications	*TN compact sensors with display*	*TR control monitors with display*	*TT / TM probe sensors*	*TS / TS ATEX cable sensors*	*TA / TAA temperature transmitters*	*For hygienic areas and viscous media*	*TT / TM probe sensors*
Temperature sensors and transmitters								
Page		*136 - 137*	*138 - 139*	*140 - 141*	*142 - 143*	*144 - 145*		*146 - 147*



Pt1000 sensor element, class A
TA34xx, TAA43x: G 1/2 male, TA31xx, TAA13x: G 1/4 male
Cable with connector, gold-plated contacts

Measuring range [°C]	Resolution [°C]	Ub [V]	Dynamic response T05 / T09 [s]	Draw-ing no.	Order no.
M12 connector · Output function 4...20 mA analogue · Connector groups 7, 8 · Wiring diagram no. 19					
0...140	< 0.02	10...30	1 / 3	17	**TA3430**
-10...150	< 0.02	10...30	1 / 3	17	**TA3431**
0...100	< 0,02	10...30	1 / 3	17	**TA3437**
M12 connector · Output function AS-i · Connector groups 7, 8 · Wiring diagram no. 21					
-10...150	0.05	26.5...31.6	1 / 3	18	**TAA431**
-10...150	0.05	26.5...31.6	1 / 3	19	**TAA131**
M12 connector · Output function 4...20 mA analogue · Connector groups 7, 8 · Wiring diagram no. 19					
0...140	< 0.02	10...30	1 / 3	20	**TA3130**
-10...150	< 0.02	10...30	1.2 / 3.5	21	**TA3231**

Common technical data

Sensor element: Pt1000, class A
Operating temperature: -25...80 °C
Shock resistance: 50 g (DIN / IEC 68-2-27, 11 ms)
Vibration resistance: 20 g (10...2,000 Hz)
Protection: IP 67
For further data see:
www.ifm-electronic.com

You can find scale drawings from page 249

TS probe sensors
148 - 149

TA / TAA temperature transmitters
150 - 151

TAD temperature transmitters
152 - 153

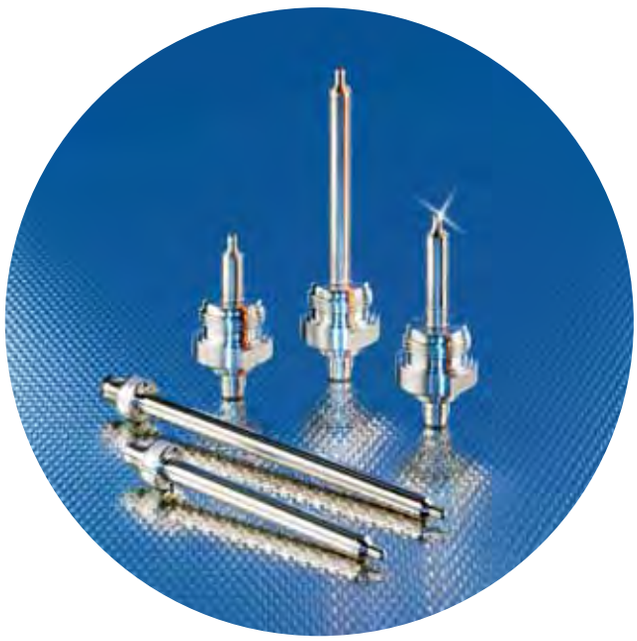

- **Different lengths enable variable installation depth in the medium.**
- **Precise temperature measurement by integrated Pt1000 sensor element.**
- **Flush clamp fitting for direct mounting in the medium.**
- **Connection by means of gold contacts.**
- **The right connection for each process: SMS, Clamp and many more.**









Accessories

Type	Description	Order no.
	Mounting set for direct connection to control monitors TR	**E30017**
	Clamp adapter Ø 10 mm for temperature sensors Ø 10 mm	**E34110**
	Clamp adapter, Ø 10 mm - G 1/2	**E34410**
	Welding adapter G 1/2 - Ø 45 mm collar	**E30056**

Connectors and splitter boxes

Type	Description	Order no.
	Jumper, M12 1 m orange, PVC cable	**EVT042**
	Jumper, M12 2 m orange, PVC cable	**EVT043**

Further accessories are available starting on page 217

Further connectors and splitter boxes are available starting on page 191

	For industrial applications	*TN compact sensors with display*	*TR control monitors with display*	*TT / TM probe sensors*	*TS / TS ATEX cable sensors*	*TA / TAA temperature transmitters*	*For hygienic areas and viscous media*	*TT / TM probe sensors*
Temperature sensors and transmitters								
Page		*136 - 137*	*138 - 139*	*140 - 141*	*142 - 143*	*144 - 145*		*146 - 147*



Pt1000 element, class A
Gold-plated contacts
Type TM with ifm adapter thread

Nominal length [mm]	Total length [mm]	Dynamic response T05 / T09 [s]	Drawing no.	Order no.
M12 connector · Connector groups 58, 61 · Wiring diagram no. 23				
Ø 10 mm	110	1 / 3	6	**TT0061**
Ø 10 mm	160	1 / 3	6	**TT1061**
M12 connector · Aseptoflex thread · Connector groups 58, 61 · Wiring diagram no. 23				
Ø 10 mm	30	5 / 14	22	**TM9061**
Ø 10 mm	0	5 / 14	23	**TM0061**
Ø 10 mm	100	5 / 14	24	**TM1061**

For evaluation units please see page 138.

Common technical data

Measuring range: -40...150 °C
Accuracy: ± (Pt 1000 + 0,2 K) %
Nominal pressure: 50 bar
(The permissible overload pressure
is determined by
the fitting used)
Protection: IP 67, III
Material: high-grade stainless steel (316S12)
Total length: L + 22 mm

You can find scale drawings from page 249

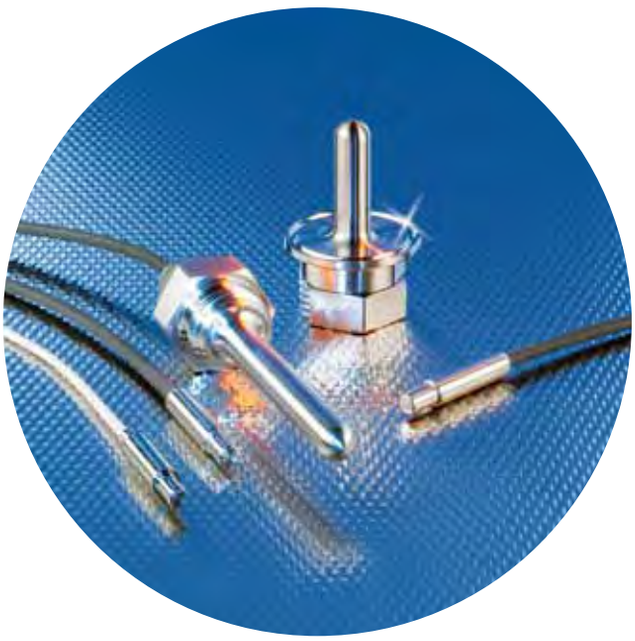

- **Reliable temperature detection in hygienic applications.**
- **Precise temperature measurement by integrated Pt1000 / Pt100 element.**
- **High pressure resistance by means of installation in hygienic thermowells.**
- **Connection by means of connector with gold contacts.**
- **The right connection for each process: e.g. SMS, Clamp and many more.**

EHEDG certified | 3 A standard | High-grade stainless steel | CIP/SIP

Accessories

Type	Description	Order no.
	Clamp fitting Ø 6/8/10 mm - G 1/2 for temperature sensors TS / TT	**E30018**
	Hygienic thermowell for temperature sensors, Ø 10 mm, probe length 45 mm	**E34005**
	Thermowell for temperature sensors, Ø 10 mm, probe length 82 mm	**E34010**
	Aseptoflex adapter, DIN11851 - 1.5" / DN40	**E33012**

Connectors and splitter boxes

Type	Description	Order no.
	Jumper, M12 1 m orange, PVC cable	**EVT042**
	Jumper, M12 2 m orange, PVC cable	**EVT043**

Further accessories are available starting on page 217

Further connectors and splitter boxes are available starting on page 191

	For industrial applications	*TN compact sensors with display*	*TR control monitors with display*	*TT / TM probe sensors*	*TS / TS ATEX cable sensors*	*TA / TAA temperature transmitters*	*For hygienic areas and viscous media*	*TT / TM probe sensors*
Temperature sensors and transmitters								
Page		*136 - 137*	*138 - 139*	*140 - 141*	*142 - 143*	*144 - 145*		*146 - 147*



Cable with connector
Gold-plated contacts

Sensor diameter [mm]	Connection	Sensor / class	Dynamic response T05 / T09 [s]	Draw-ing no.	Order no.
Cable with connector 2 m · Connector groups 58, 61 · Wiring diagram no. 23					
Ø 10 mm	FPM (Viton) cable; 2 m	Pt1000 / B	6 / 25	10	**TS2051**
Ø 10 mm	FPM (Viton) cable; 5 m	Pt1000 / B	6 / 25	10	**TS5051**
Ø 10 mm	PTFE cable; 2 m	Pt100 / A	12 / 39	12	**TS2056**

For evaluation units please see page 138.

Common technical data

Measuring range: -40...150 °C
(TS2051, TS5051),
-40...250 °C (TS2056)
Protection: IP 67, III
Material sensor:
high-grade stainless steel (316S12)
Material connection cable:
FPM (Viton)
(TS2051, TS5051)
PTFE (TS2056)

You can find scale drawings from page 249

TS probe sensors *148 - 149*

TA / TAA temperature transmitters *150 - 151*

TAD temperature transmitters *152 - 153*

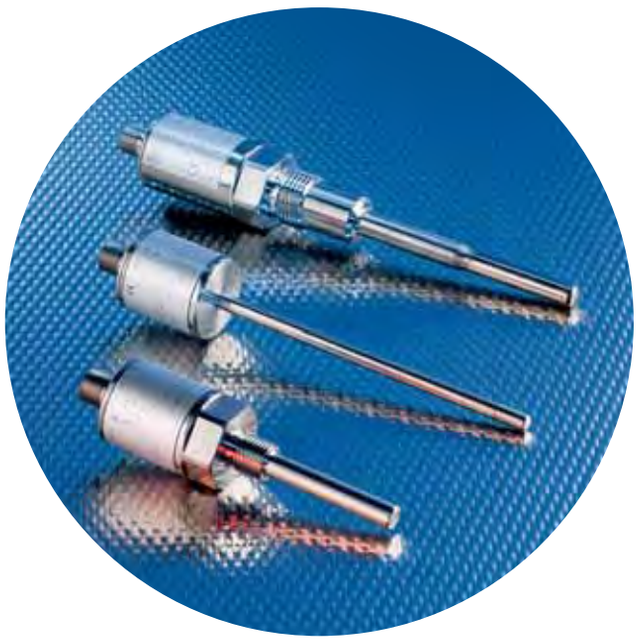

- **Exact temperature transmitter.**
- **4...20 mA analogue output or AS-i slave with profile S-7.3.**
- **Excellent dynamic response.**
- **Robust mechanics with high vibration and shock resistance.**
- **Flexible mounting options.**









Accessories

Type	Description	Order no.
	Clamp adapter Ø 10 mm for temperature sensors Ø 10 mm	**E34110**
	Thread cover for types TA	**E30090**
	Welding adapter G 1/2 - Ø 35 mm ball	**E30055**
	Adapter, Clamp 1" / 1.5"	**E33401**
	Adapter, Clamp 2"	**E33402**

Connectors and splitter boxes

Type	Description	Order no.
	Socket, M12 2 m black, PUR cable	**EVC004**
	Socket, M12 5 m black, PUR cable	**EVC005**
	Socket, M12 2 m black, PUR cable	**EVC001**
	Socket, M12 5 m black, PUR cable	**EVC002**
	Socket, M12, Group 58 5 m orange, PVC cable	**EVT004**
	Socket, M12, Group 58 10 m orange, PVC cable	**EVT005**
	Socket, M12, Group 58 5 m orange, PVC cable	**EVT001**
	Socket, M12, Group 58 10 m orange, PVC cable	**EVT002**

Further accessories are available starting on page 217

Further connectors and splitter boxes are available starting on page 191

	For industrial applications	*TN compact sensors with display*	*TR control monitors with display*	*TT / TM probe sensors*	*TS / TS ATEX cable sensors*	*TA / TAA temperature transmitters*	*For hygienic areas and viscous media*	*TT / TM probe sensors*
Temperature sensors and transmitters								
Page		*136 - 137*	*138 - 139*	*140 - 141*	*142 - 143*	*144 - 145*		*146 - 147*



Pt1000 sensor element, class A
TA34xx, TAA43x: G 1/2 male, TA31xx, TAA13x: G 1/4 male
Cable with connector, gold-plated contacts

Measuring range [°C]	Resolution [°C]	Ub [V]	Dynamic response T05 / T09 [s]	Drawing no.	Order no.
M12 connector · Output function 4...20 mA analogue · Connector groups 58, 61 · Wiring diagram no. 19					
0...140	< 0.02	10...30	1 / 3	17	**TA3430**
0...100	< 0.02	10...30	1 / 3	17	**TA3437**
-10...150	< 0.02	10...30	1 / 3	17	**TA3431**
M12 connector · Output function AS-i · Connector groups 58, 61 · Wiring diagram no. 21					
-10...150	0.05	26.5...31.6	1 / 3	18	**TAA431**
M12 connector · Output function 4...20 mA analogue · Connector groups 58, 61 · Wiring diagram no. 19					
-10...150	< 0.02	10...30	1.2 / 3.5	21	**TA3231**

Common technical data

Sensor element: Pt1000, class A
Operating temperature: -25...80 °C
Shock resistance:
50 g (DIN / IEC 68-2-27, 11 ms)
Vibration resistance:
20 g (10...2,000 Hz)
Protection: IP 67
For further data see:
www.ifm-electronic.com

You can find scale drawings from page 249



- **Integrated temperature decoupl. and hygienic connection, for CIP and SIP.**
- **Accuracy 0.2 K from -10...100 °C, 0.3 K from 100...150 °C.**
- **Transmitter with backup function and drift monitoring.**
- **Configurable diagnosis, evaluated via a separate diagnostic output.**
- **Temperature range from -10...150 °C, peak temperatures from -25...170 °C.**





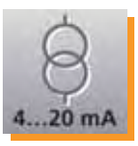



Accessories

Type	Description	Order no.
	Aseptoflex adapter, Clamp 1.5"	**E33001**
	Aseptoflex adapter, Clamp 2"	**E33002**
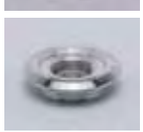	Aseptoflex adapter, Varivent D50	**E33021**
	Adapter, Clamp 1" / 1.5"	**E33401**
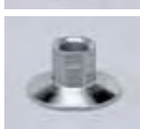	Adapter, Clamp 2"	**E33402**

Connectors and splitter boxes

Type	Description	Order no.
	Socket, M12 2 m black, PUR cable	**EVC004**
	Socket, M12 5 m black, PUR cable	**EVC005**
	Socket, M12 2 m black, PUR cable	**EVC001**
	Socket, M12 5 m black, PUR cable	**EVC002**
	Socket, M12, Group 58 5 m orange, PVC cable	**EVT004**
	Socket, M12, Group 58 10 m orange, PVC cable	**EVT005**
	Socket, M12, Group 58 5 m orange, PVC cable	**EVT001**
	Socket, M12, Group 58 10 m orange, PVC cable	**EVT002**

Further accessories are available starting on page 217

Further connectors and splitter boxes are available starting on page 191

	For industrial applications	*TN compact sensors with display*	*TR control monitors with display*	*TT / TM probe sensors*	*TS / TS ATEX cable sensors*	*TA / TAA temperature transmitters*	*For hygienic areas and viscous media*	*TT / TM probe sensors*
Temperature sensors and transmitters								
Page		*136 - 137*	*138 - 139*	*140 - 141*	*142 - 143*	*144 - 145*		*146 - 147*



Long-term stable temperature transmitter with diagnostic output
Probe length: TAD961, TAD971 = 40 mm, TAD161, TAD171 = 100 mm
Process connection via M12 connector, gold-plated contacts

Measuring range [°C]	Resolution [°C]	Ub [V]	Process connection	Dynamic response	Drawing no.	Order no.
M12 connector · Output ⎓ / ⎓ t / heartbeat progr., 4...20 mA analogue · Connector groups 58, 59, 61 · Wiring diagr. no. 25						
-25...150	0.05	20...32	Aseptoflex thread	6 / 13	25	**TAD961**
-25...150	0.05	20...32	Aseptoflex thread	6 / 13	26	**TAD161**
-25...150	0.05	20...32	G 1/2 male	6 / 13	27	**TAD971**
-25...150	0.05	20...32	G 1/2 male	6 / 13	28	**TAD171**

For information about the parameter and analysis software see pages 110 / 111 “ifm Container program”.

Common technical data

Operating temperature: -25...70 °C
Shock resistance:
50 g (DIN / IEC 68-2-27, 11 ms)
Vibration resistance:
20 g (10...2.000 Hz)
Protection: IP 69K
For further data see:
www.ifm-electronic.com

You can find scale drawings from page 249



Diagnostic systems

efector800

Systems for vibration diagnosis

System description 156 - 159
Selection chart 160

Universal application



Systems for vibration diagnosis for industrial applications

Type VB / VE with RS-232 interface and LED diagnosis 162 - 163
Type VE with RS-485 interface 164 - 165
Types VSE / VSA diagnostic electronics and vibration sensor 166 - 169

Special application



Systems for vibration diagnosis for hazardous areas

Type VE with RS-485 interface 170 - 171



Introduction – Condition-based maintenance

The market requirements for manufacturing companies are constantly increasing, the complexity of production is rising, and production systems are operated up to their capacity limit. Companies are ever closer linked to each other, time and stock buffers are further reduced. Downtimes have expensive consequences and the demands on the reliability of machinery and plant are increasing.

Due to selective maintenance measures machine uptime as well as competitiveness can be further increased.

In principle the following types of maintenance are distinguished:

- Preventive maintenance – machines are serviced at regular intervals and machine parts such as rolling element bearings are replaced as a preventive measure. The wear margin is in general not used up.
- Repair after "run until failure" - in this case the machine is deliberately operated beyond the deterioration limit. The damage is repaired.
- Condition-based maintenance – in this case the condition (= wear margin) of the machine is monitored, maintenance is initiated depending on the condition.
- If permanent monitoring based on a sensor provides the basis for a condition-based maintenance we talk about **Real Time Maintenance.**

Condition-based maintenance has many advantages:

- The lifetime and the wear margin are used more efficiently, machines can be operated for a longer period of time. Studies have shown that with condition-based maintenance the number of unplanned machine downtimes can be reduced by up to 75 %.
- The production quality during operation remains constant.
- Rejects due to abrupt standstill are prevented. Especially critical machines and machine parts with a low wear margin should be monitored as they have the biggest potential for cost savings and productivity improvement. Intelligent sensors are the key to continuous monitoring and early detection of damages.

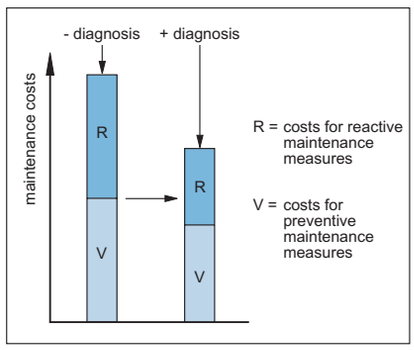

Maintenance costs can be reduced and the uptime of machines and plants can be increased by means of vibration diagnosis. For more information, please read the study of the WZL laboratory on intelligent maintenance – "potentials of condition-based maintenance". (www.ifm-electronic.com/studie).

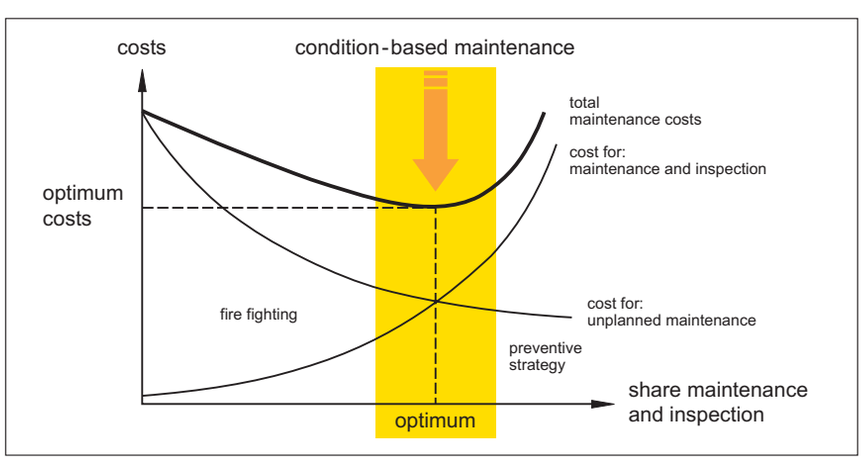

Costs for the different maintenance strategies.

Vibration diagnosis

Vibration diagnosis provides most comprehensive information for early damage diagnosis and for judging operating conditions. **efector *octavis*** continuously detects, analyses and evaluates vibrations on the machine surface.

The following damages and operating conditions can be reliably detected already at an early stage by means of vibration diagnosis:

- Rolling element bearing damage
- Damage to couplings
- Rubbing
- Gear-mesh damage
- Unbalance
- Alignment condition
- Cavitation
- External influences (e.g. crash)
- Metal cutting operations (on machine tools)
- etc.

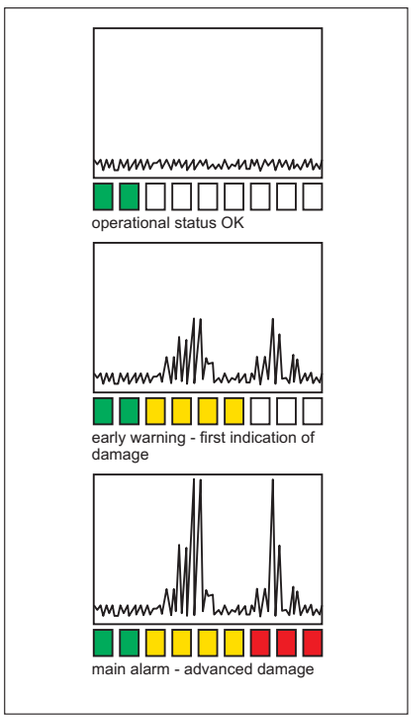

Clear function.

Function – efector *octavis* supports machine-integrated condition monitoring.

The target was to develop machine-oriented vibration monitoring. **efector *octavis*** should not only detect vibration data but also perform the requested signal analysis and machine diagnosis already on the machine. The machine condition can be determined right on the site of measurement and be signalled via binary alarms or as a diagnostic protocol to higher-level controllers. Three requirements of modern machine monitoring are met: compatibility, scalability and repeatability.

Compatibility with existing data structures enables full integration of condition information in higher-level systems. Scalability is an important requirement which allows companies to obtain modular extension of condition monitoring of machinery and plant.

High repeatability of < 5 % as well as a linearity error < 1 % provide optimum prerequisites for reliable (online) monitoring of long-term stability.

It is also important that monitoring is permanent and in real time to enable quick action in the events of slow development of damage such as rolling element bearing damage and of quick development of damage such as unbalance on spindles.

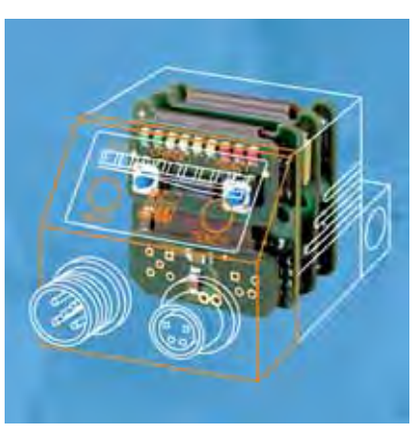

Powerful electronics where space is extremely restricted. 16-bit digital signal processor 160 MHz, 15-bit A/D converter, micromechanical acceleration processor. Software algorithm: envelope-curve FFT programmed in assembler.

Visit our website: www.ifm-electronic.com

Hardware

Recent findings in micromechanical sensors and digital signal processing enable the development of a microsystem for detecting, evaluating and diagnosing measured data. Depending on the version up to 10 kHz can be evaluated linearly. The field devices in which the entire diagnostic electronics are already integrated in the sensor have a measuring range of up to 6 kHz.

The actual measuring cell of **efector *octavis*** consists of a micromechanical acceleration sensor with a linear measuring range of +/-30 g (+/- 294 m/s²). The dynamic scope is approx. 48 dB. The special advantages of the MEMS technology (**M**icro-**E**lectro-**M**echanical **S**ystems) are high reliability and ageing resistance. Even impacts of more than 500 g lead neither to signal fluctuations nor to destruction of the measuring cell. Moreover, the functionality is ensured by an integrated self-test. Recalibration as well as undetected faults in the measuring chain are thus a thing of the past.

Of considerable advantage are the cabling costs. The entire ***octavis*** family uses standard cables as they are used in machine and plant construction. The common cable problems of acceleration sensors caused by cable squeezing do not occur.

Mounting via the bore hole for crane hooks, in a radial direction to the axis of rotation.





***efector octavis** monitors the rolling element bearing of a motor.*

Condition monitoring

The firmware of **efector *octavis*** consists of an object-referred fault tree. Each error object consists of narrow frequency bands whose centre frequency corresponds to the kinematic damage frequency of a machine fault. If several frequencies are symptomatic for a damaged object (inner race, outer race and ball pass frequencies) – for example in the event of a damage to the rolling element bearing – the "object" rolling element bearing is assigned three frequency bands.

The basis for determining the damage amplitudes is the linear spectrum. Depending on the machine damage the frequency analysis can be made by means of the acceleration data or the envelope curve of the acceleration data.

The actual diagnosis is made via a trend analysis. That means the current value is compared with the basic value of an intact machine. This basic value can be generated for each object during the teach run. A structural influence to the measured value due to the component resonances or deviations from the mounting location to the diagnosis location is "standardised" by the teach value. Signal weighting filters automatically correct interference in applications with variable speed.

The fault tree is set in the beginning via the PC software by setting the application parameters such as damage frequencies, speed and switch points.

efector *octavis* features a speed input for applications with variable speed. The narrow frequency bands defined in the fault tree are automatically taken into account within the framework of a frequency factor analysis.

The field units of type VE feature 5 diagnosis objects (20 frequency bands) and 1 g-monitor to evaluate the general vibration condition (exception type VB).

The control cabinet units (type VSE) can use the signals from up to 4 vibration sensors (type VSA) and dispose of a total of 20 diagnosis objects and 4 level values or 16 diagnostic objects and 8 level values.

Internal trend memory

All units of the ***octavis*** family feature an internal trend memory which ensures detailed analysis and optimisation of the application also without external data recording. Freely selectable storage intervals enable adaptation of the storage length of the non volatile ring memory to the requirements.

*Pumps: Wear and tear can cause reduced performance through to total failure. **efector octavis** detects and signals first indication of damage to rolling element bearings at an early stage.*





Screw compressors: Here the rolling element bearings are subjected to high shearing stress. The resulting wear can lead to destruction of the screws.

***efector octavis** detects the bearing conditions and possible rub effects. This guarantees maximum lifetime.*

Applications

Early damage diagnosis helps avoid unplanned downtime, increase technical uptime and prepare maintenance activities in an optimum way. The MTTR values (= **m**ean **t**ime **t**o **r**epair) can be reduced. Identification of impermissible operating states helps increase the lifetime of the components. This is considered as an improvement of the MTBF values (= **m**ean **t**ime **b**etween **f**ailure). Examples:

Application rolling element bearing:

Damage: Pittings in the bearing surface
Causes of the damage: Wear and tear due to insufficient lubrication, **efector *octavis*** monitors the specific damage frequencies of the rolling element bearing for the inner race, the outer race and the rolling elements.

The following data is required for parameter setting:

- The geometric data of the rolling elements, the diameter of the rolling element and the diameter of the pitch cycle, or the DIN designation of the rolling element bearing to be monitored.
- The operating speed

Application Unbalance:

efector *octavis* detects unacceptable unbalance at an early stage. The condition diagnosis enables preventive intervention before greater damage or failure is caused. To monitor unbalance, the operating speed is required as parameter.



*Spindles: **efector octavis** detects first indication of unbalance and damage of rolling element bearings, thus enabling maximum lifetime with a low risk of failure.*

Ventilators: Due to deposits and wear unbalance can considerably increase in the course of time. Without diagnosis of the rolling element bearings this can go unnoticed until the function completely fails.



Visit our website: www.ifm-electronic.com

Selection chart

Housing / Process connection		Frequency range [Hz]	Spectral resolution [Hz]	Speed range* [U / min]	Minimum measuring time [s]	Output	Application	Page
Vibration diagnosis with RS-232 interface and LED diagnosis								
type VB 	M12 – electrical connection M8 – RS-232 communication	3...6,000 diagnosis of up to 2 different objects	1.25	500... 6,000	0.8	2 x 100 mA	●	162
type VE 	M12 – electrical connection M8 – RS-232 communication	3...6,000 (VE1002 0.125...500) diagnosis level for up to 20 different frequencies	1.25 (VE1002 0.125)	120... 12,000 (VE1002 12...3,500)	0.8 (VE1002 8**)	2 x 100 mA	●	162
Vibration diagnosis with RS-485 interface								
type VE 	M12 – electrical connection M8 – RS-485 communication	3...6,000 (VE1102 0.125) diagnosis level for up to 20 different frequencies	1.25 (VE1102 0.125)	120... 12,000 (VE1102 12...3,500)	0.8 (VE1002 8**)	2 x 100 mA	●	164
type VE ATEX 	M12 – electrical connection M8 – RS-485 communication	3...6,000 (VE112A 0.125...500)	1.25 (VE112A 0.125)	120... 12,000 (VE112A 12...3,500)	0.8 (VE112A 8)	DC	●	170
Vibration sensor for VSE diagnostic electronics								
type VSA 	M12 connector for connection to external diagnostic electronics VSE	0...6,000 vibration detection up to ± 25 g	–	–	–	0...100 mA	●	168
Diagnostic electronics for VSA vibration sensor								
type VSE 	Combicon connection, Ethernet interface	100	–	–	–	2 x DC or 1 x DC + 1 x 0/4... 20 mA	●	166

*The actual speed range depends on the type of rolling element bearing and can therefore deviate
**This response time has to be taken into account for the use

For industrial applications

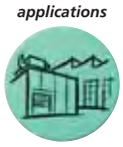

For hazardous areas





- **Permanent condition monitoring.**
- **Detects unbalance and damage to rolling element bearings.**
- **Up to 20 monitoring frequencies, freely programmable.**
- **Enables optimum uptime of critical machines.**

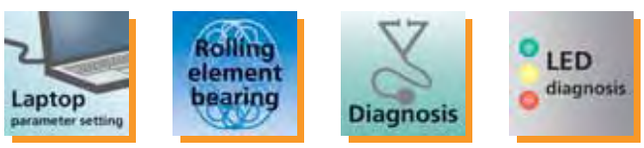

efector® octavis

Accessories

Type	Description	Order no.
	Expert software for efector octavis	**VES001**
	Parameter setting cable for efector octavis ifm electronic straight / straight	**E11572**
	Pulse generator	**E30082**
	Y connection cable ifm electronic 2 way	**E11664**

Connectors and splitter boxes

Type	Description	Order no.
	Socket, M12, Group 11 2 m black, PUR cable	**EVC070**
	Socket, M12, Group 11 5 m black, PUR cable	**EVC071**
	Socket, M12, Group 11 10 m black, PUR cable	**EVC072**

Further accessories are available starting on page 217

Further connectors and splitter boxes are available starting on page 191

	For industrial applications	*VB / VE with RS-232 interface and LED diagnosis*	*VE with RS-485 interface*	*VSE / VSA diagnostic electronics and vibration sensor*	*For hazardous areas*	*VE with RS-485 interface*
Systems for vibration diagnosis				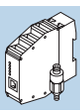		
Page		*162 - 163*	*164 - 165*	*166 - 169*		*170 - 171*

Diagnosis of up to two different rolling element bearings
Sensor, evaluation and diagnosis in one unit, 2 switching outputs
LED display: Yellow = first indication of damage (output 1), red = advanced damage (output 2)

Frequency range [Hz]	Spectral resolution [Hz]	Monitoring rang [U/min]	Ub [V]	Operating temperature [°C]	Minimum measuring time [s]	Draw-ing no.	Order no.
Connection via M12 x 1 and M8 x 1 connectors							
3...6000	1.25	500...6000	10...32	-30...60	0.8	1	**VB1001**
3...6000	1.25	120...12000	10...32	-30...60	0.8	1	**VE1001**
0.125...500	0.125	12...1500	10...32	-30...60	8 **	1	**VE1002**
24...12500	15.625	1.500...96.000	10...32	-30...75	0.064	2	**VE1103 ***

Description

efector octavis is suited for the early detection of damage to rolling element bearings, unbalance, alignment errors and meshing, e.g. in critical plant parts such as pumps, spindles, compressors, ventilators, gears, and electric motors.

efector octavis parameters are easy to set at the PC via the RS-232 interface (accessory – SubD9 cable, article no. E11572). The parameter setting software (VES001) includes an easy-to-follow setup assistant. The current machine condition is indicated on the unit and provided via potential free switching contacts. Networking and integration of the machine condition into higher-level systems or controllers is possible.

Using the VE1001 / VE1002 compact units with integrated control monitor machine states are permanently monitored in a decentralised way. Higher-level systems are warned via the "warning" and "alarm" switching outputs. The trend information of machine damage is stored internally and can be read out using the sensor's RS-232 interface.

Illustration

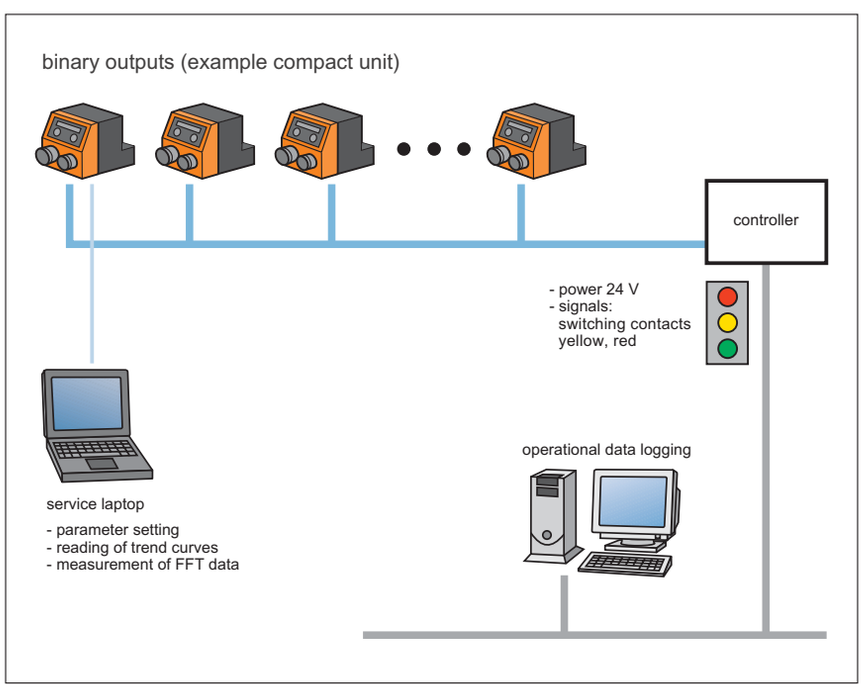

Common technical data

Sensing principle: micromechanical acceleration sensor / capacitive measuring principle / one measurement axis
Measuring range: ± 25 g
Diagnostic method: spectral analysis envelope-curve FFT, trend analysis
Current consumption: 100 mA (24 V)
Protection: IP 67, III
EMC: IEC 1000-4-2 / 3 / 4 / 6
Overload protection: 100 g
Housing material: diecast zinc nickel-plated, keypad: polyester
* without LED protection: IP 69K
** the total reaction time which is correspondingly longer has to be taken into consideration

You can find scale drawings from page 252

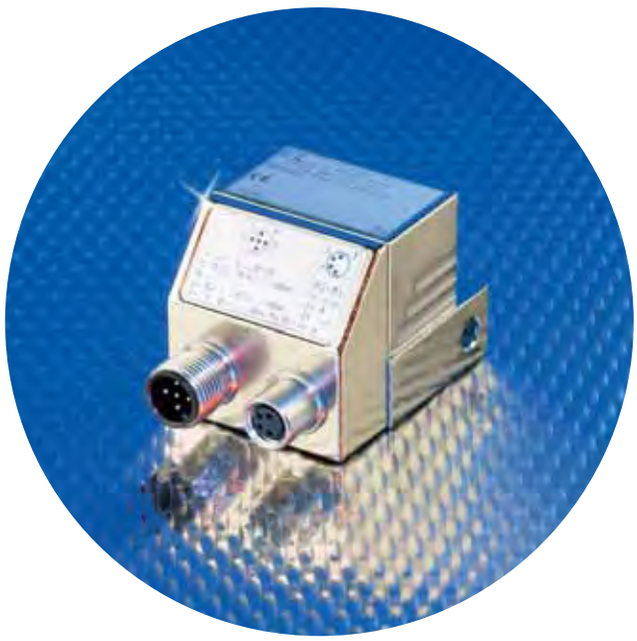

- **Permanent condition monitoring.**
- **Detects unbalance, damage to rolling element bearings.**
- **Up to 20 monitoring frequencies, freely programmable.**
- **For optimised uptime of critical machines.**
- **Continuous transmission of diagnostic values for operational data logging.**









efector octavis

Accessories

Type	Description	Order no.
	Expert software for efector octavis	**VES001**
	USB/RS485 adapter cable ifm electronic straight / straight	**E30098**
	Pulse generator	**E30082**
	Y connection cable ifm electronic 2 way	**E11664**

Connectors and splitter boxes

Type	Description	Order no.
	Socket, M12, Group 11 2 m black, PUR cable	**EVC070**
	Socket, M12, Group 11 5 m black, PUR cable	**EVC071**
	Socket, M12, Group 11 10 m black, PUR cable	**EVC072**

Further accessories are available starting on page 217

Further connectors and splitter boxes are available starting on page 191

	For industrial applications	*VB / VE with RS-232 interface and LED diagnosis*	*VE with RS-485 interface*	*VSE / VSA diagnostic electronics and vibration sensor*	*For hazardous areas*	*VE with RS-485 interface*
Systems for vibration diagnosis				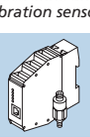		
Page		*162 - 163*	*164 - 165*	*166 - 169*		*170 - 171*

Up to 20 frequencies in the spectrum, freely selectable, diagnostic level adjustable
Sensor, evaluation and diagnosis in one unit, 2 switching outputs

Frequency range [Hz]	Spectral resolution [Hz]	Monitoring rang [U/min]	Ub [V]	Operating temperature [°C]	Minimum measuring time [s]	Draw-ing no.	Order no.
Connection via M12 x 1 and M8 x 1 connectors							
3...6000	1.25	120...12000	10...32	-30...75	0.8	3	**VE1101**
0.125...500	0.125	12...1500	10...32	-30...75	8 *	3	**VE1102**

Description

The VE1101 / VE1102 compact units with integrated evaluation electronics are used for the continual decentralised monitoring of the machine conditions. Higher-level systems are warned via the "warning" and "alarm" switching outputs. In addition the diagnostic values can be transferred to the Profibus via the RS-485 interface and a suitable fieldbus coupler. The trending of machine damage is stored internally. The RS-485 interface is used to read out the internally stored trend information as well as to set the sensor.

Illustration

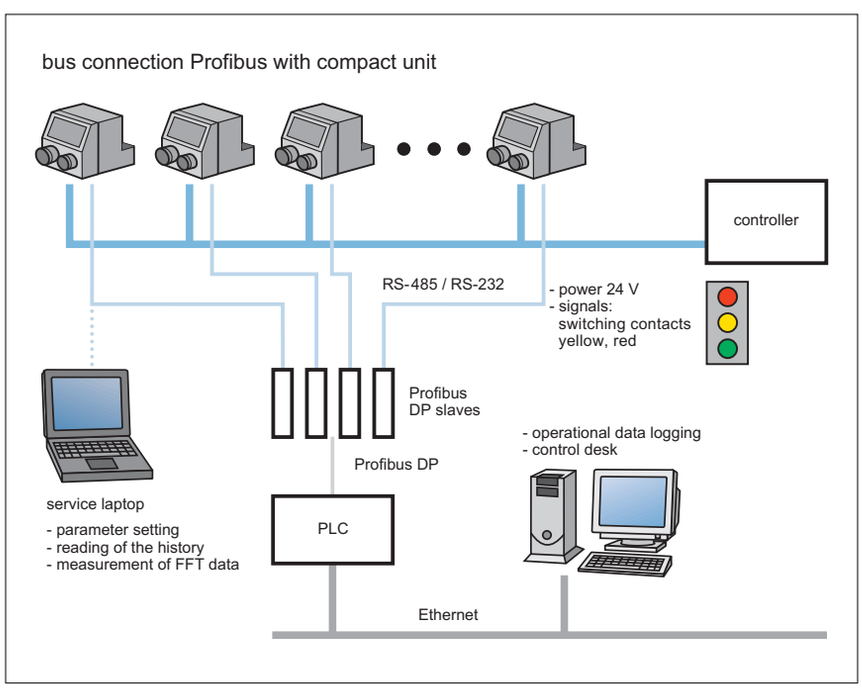

Common technical data

Sensing principle: micromechanical acceleration sensor / capacitive measuring principle / one measurement axis
Measuring range: ±25 g
Diagnostic method: spectral analysis envelope-curve FFT, trend analysis
Current consumption: 100 mA (24 V)
Protection: IP 69K, overload protec.: 100 g
EMC: IEC 1000-4-2 / 3 / 4 / 6
Housing material: diecast zinc nickel-plated, Keypad: polyester
* the total reaction time which is correspondingly longer has to be taken into consideration

You can find scale drawings from page 252



- **Low system costs for an optimised machine uptime.**
- **Frequency-selective machine diagnosis of up to 4 measuring points.**
- **Ethernet interface for the integration into operational data logging.**
- **Integrated history memories with real-time clock.**

Diagnosis

Ethernet

efector octavis

Accessories

Type	Description	Order no.
	Parameter setting software for VSExxx	**VES003**
	Cross-over patch cable Cable length 5 m	**E30112**
	Cross-over patch cable Ethernet interface, cable length 2 m	**EC2080**

Description

The cabinet units of type VSE are used for the continual decentralised monitoring of machine conditions of up to four vibration sensors (type VSA). Higher-level systems are warned via the "warning" and "alarm" switching outputs or the analogue output. Integration into the production data acquisition system is possible using an integrated Ethernet TCP interface and the efector octavis OPC Server (order number E30114).

Further accessories are available starting on page 217

	For industrial applications	*VB / VE with RS-232 interface and LED diagnosis*	*VE with RS-485 interface*	*VSE / VSA diagnostic electronics and vibration sensor*	*For hazardous areas*	*VE with RS-485 interface*
Systems for vibration diagnosis				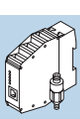		
Page		*162 - 163*	*164 - 165*	*166 - 169*		*170 - 171*

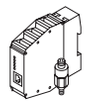

Compact housing for control cabinet mounting
Diagnostic electronics for vibration sensors type VSA

Current consumption [mA]	Data interface	Sampling-rate [kSamples]	Operating voltage [V]	Operating temperature [°C]	Draw-ing no.	Order no.
Combicon connection · Output 2 x ⎍ / ⎍ progr. or 1 x <Pic>0003</Pic> progr + 1 x analog. (0/4...20 mA) · Wiring diagr. no.						
100	TCP/IP	100	10...32	0...70	4	**VSE001**

Common technical data

Protection: IP 20, III
Housing: DIN rail 1 inch
Housing material: PA
Dynamic inputs: 4 x 0...10 mA
Static inputs: 2 x 0/4...20 mA or pulse
Communication: Ethernet interface
(10 / 100 Mbits)
Connection: Combicon

You can find scale drawings from page 252

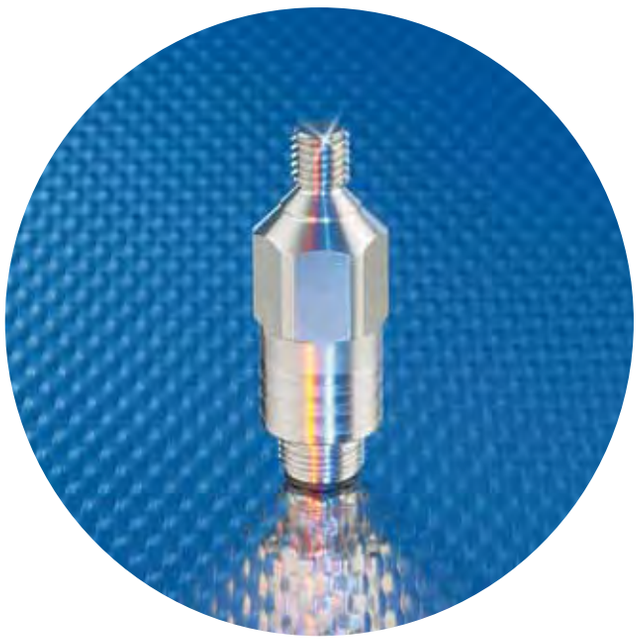

- **Vibration sensor for VSE diagnostic electronics.**
- **The right enclosure for harsh environmental conditions.**
- **Standard M12 connection (4 poles) as well as standard cable.**
- **Temperature range -30 to 125 °C.**
- **Integrated self-test.**

High-grade stainless steel

IP 69 K

efector® octavis

Accessories

Type	Description	Order no.
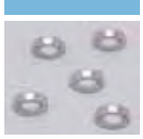	Ø 8.4 / 15 mm for efector octavis	**E30115**

Connectors and splitter boxes

Type	Description	Order no.
	Socket, M12 5 m orange, PVC cable	**EVT001**
	Socket, M12 10 m orange, PVC cable	**EVT002**
	Socket, M12 25 m orange, PVC cable	**EVT003**

Further accessories are available starting on page 217

Further connectors and splitter boxes are available starting on page 191

	For industrial applications	*VB / VE with RS-232 interface and LED diagnosis*	*VE with RS-485 interface*	*VSE / VSA diagnostic electronics and vibration sensor*	*For hazardous areas*	*VE with RS-485 interface*
Systems for vibration diagnosis				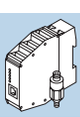		
Page		*162 - 163*	*164 - 165*	*166 - 169*		*170 - 171*

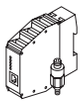

Process connection M8 x 1.25

Frequency range [Hz]	Linearity [%]	Overload protection [g]	Sensitivity [mg/√Hz]	Operating temperature [°C]	Measuring range [g]	Drawing no.	Order no.
M12 connector · Output function 0...10mA, analogue · Connector groups 7, 8							
0...6000	0,2	500	0,2	-30...125	+/- 25	5	**VSA001**

Description

The vibration sensor is used for the detection of measured data and was specially developed for the octavis diagnostic electronics (type VSE).

The highly dynamic analogue output ensures the correct transmission of high-frequency vibration signals even over distances of up to 30 m in a standard cable. The compact and highly robust design provides good long-term stability even under adverse environmental conditions (load up to 500 g). Due to the use of modern silicon technology the sensitivity of the sensor is both long-term stable and temperature independent. The measuring chain is continuously checked via the integrated self-test.

There is no overshoot of the measuring signal in the event of overload or crushed cables.

Illustration

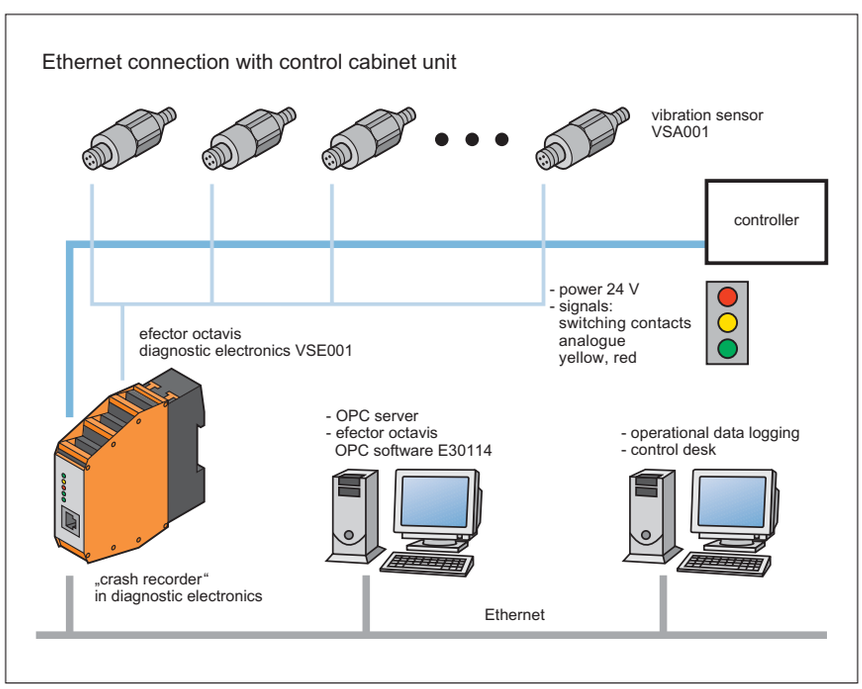

Common technical data

Sensing principle: micromechanical accelerometer / capacitive measuring principle / one measurement axis
Connection: M12 connector; recommended max. cable length 30 m

You can find scale drawings from page 252

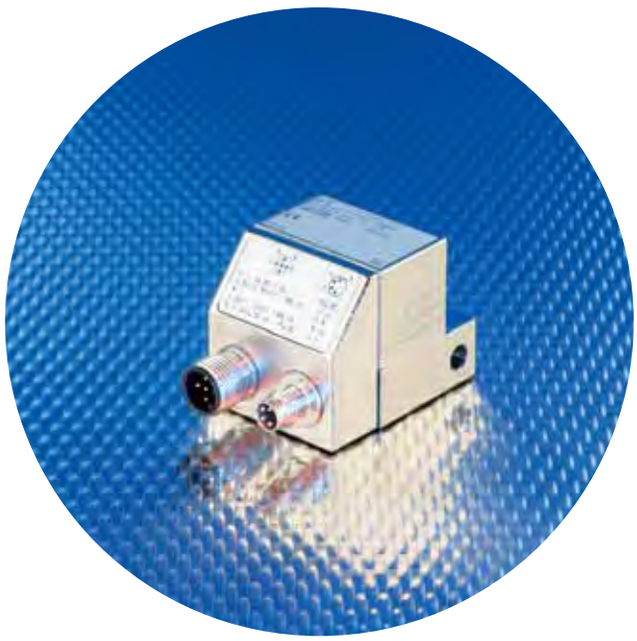

- **Type VE with RS-485 communication interface.**
- **Interference immune data transfer.**
- **Transmission up to 200 m.**
- **Detects unbalance, damage to rolling element bearings, alignment errors.**
- **Internal history memory.**









efector octavis

Accessories

Type	Description	Order no.
	Expert software for efector octavis	**VES001**
	USB/RS485 adapter cable ifm electronic straight / straight	**E30098**
	Pulse generator	**E30082**
	Power supply	**E30080**
	Securing clip for M12 connectors with potted cable	**E11532**

Further accessories are available starting on page 217

Connectors and splitter boxes

Type	Description	Order no.
	Socket, M12 2 m black, PUR cable	**EVC070**
	Socket, M12 5 m black, PUR cable	**EVC071**
	Socket, M12 2 m, PUR cable, LED	**E10854**
	Socket, M8 2 m black, PUR cable	**E11196**
	Socket, M8 5 m black, PUR cable	**E11197**
	Socket, M8 10 m black, PUR cable	**E11198**

Further connectors and splitter boxes are available starting on page 191

	For industrial applications	*VB / VE with RS-232 interface and LED diagnosis*	*VE with RS-485 interface*	*VSE / VSA diagnostic electronics and vibration sensor*	*For hazardous areas*	*VE with RS-485 interface*
Systems for vibration diagnosis				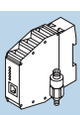		
Page		*162 - 163*	*164 - 165*	*166 - 169*		*170 - 171*

Up to 20 frequencies in the spectrum, freely selectable, diagnostic level adjustable

Frequency range [Hz]	Spectral resolution [Hz]	Monitoring rang [U/min]	Ub [V]	Operating temperature [°C]	Minimum measuring time [s]	Draw-ing no.	Order no.
Connection via M12 x 1 and M8 x 1 connectors							
3...6000	1.25	120...12000	10...32	-20...60	0.8	3	**VE111A**
0.125...500	0.125	12...1500	10...32	-20...60	8	3	**VE112A**

Networkable decentralised machine diagnosis

efector octavis detects unbalance, damage to rolling element bearings, alignment errors and meshing in good time. This allows optimisation of the uptime of plant parts such as gears, electric motors, ventilators and spindles and increasing the efficiency in production.

The compact diagnostic system analyses the vibration signals according to the methods of frequency analysis. A micromechanical accelerometer acts as the sensing element. The data is recorded, analysed and assessed by the system in a decentralised way. Expert knowledge is not required for this. The RS-485 communication interface allows transferring diagnostic values and calculated spectra to central control systems. Machine damage is detected as it arises. Maintenance measures can thus be planned and efficiently implemented.

Common technical data

Current consumption: 100 (24 V DC) mA
Overload protection: 100 g
Measuring range ± 25 g (nominal ± 20 g)
Housing material: diecast zinc
EMV IEC 1000-4-2/3/4/6
Approvals: Ex II 3D IP69K T = 90°C X -20°C ≤ Ta ≤ 60°C,
Ex II 3G EEx nA II T4 X
Spectral analysis / FFT,
Envelope-curve FFT, Trend analysis
Protection: IP 69K, III

You can find scale drawings from page 252



Evaluation systems, power supplies

ecomat200

Amplifiers, transformer and switched-mode power supplies

System description 174 - 177
Selection chart 178 - 180

Universal application



Amplifiers for industrial applications

Standard signal evaluation and display 182 - 185



Transformer and switched-mode power supplies for industrial applications

Transformer power supplies 186 - 187
Switched-mode power supplies 188 - 189

Introduction

Evaluation systems for analogue standard signals, for example for monitoring and displaying process values such as pressure, flow rate, temperature and volume, are available for rail and panel mounting.

High reliability and easy handling distinguish all units. Independent of the PLC they indicate operating states or signal faults and machinery states. They help to reduce downtimes and production loss.

AL-3: Analogue threshold relays for analogue standard signals

With two analogue inputs, one analogue output and four operating modes the AL-3 offers various possibilities to monitor physical units which can be converted into analogue standard signals. Subtraction and summation is possible by means of signal combination. The differential values or total values are also available as an analogue output signal 0/4...20 mA.

Setting of the switch points and display of the measured values can be adapted to the measuring range of the connected sensor. A combined relay-transistor output switches in accordance with the set switching function. In addition the signal monitoring indicates wire break and a too high input signal. As a special feature the AL-3 provides monitoring of the input signal, for example to detect and signal wire break.

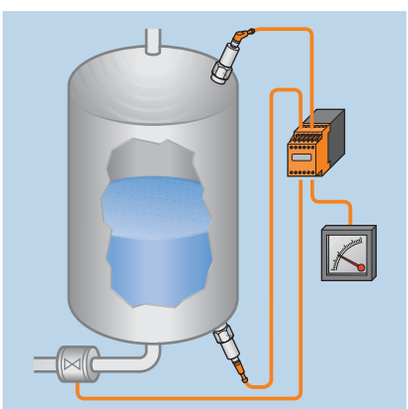

Level monitoring and display on a tank with the analogue threshold relay AL-3.

AX360: Display for analogue signals

In process technology local visualisation and monitoring of current process values, e.g. flow, pressure or temperature may be important for the machine operator. These are to be displayed and monitored.

Typical sensors for these applications supply a digital switched signal informing whether limit values have been reached or are above or below preset values. The pressure or temperature values measured by a sensor or a transmitter can be directly shown on these scaleable displays using the linear output signal, which is proportional to the measured quantity. With suitable flow sensors it is possible to indicate flow velocities or quantities, e.g. in litres per minute.

The display AX360 can measure analogue standard signals on two inputs and display them by means of the scaling function as pressure, temperature or flow rate value. Different functions allow the unit to be operated as a one-channel or two-channel unit or as a differential display. The unit is also available with a transistor output option. The displays can be conveniently read due to the large character height.

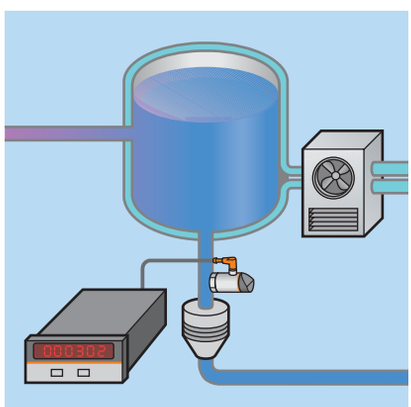

Analogue value display AX360: By means of a flow sensor the programmable display directly indicates the flow in "litres / minute".

Introduction

They may be unglamorous and unobtrusive, but without them it would not be possible to operate an electronic system. Power supplies are essential. They provide the voltage supply for sensors, actuators, controllers and other electrical loads. ifm offers powerful switch-mode power supplies for different applications but also combinations of switching amplifiers with integrated transformer power supplies.

Transformer power supplies

Transformer power supplies provide a low voltage, normally 24 V DC to supply PLCs, sensors or evaluation electronics. A transformer according to DIN 0551 ensures a safe electrical separation from mains voltage and low voltage. The output voltage can be regulated (± 5 %) or smoothed by means of capacitors. The different designs and output powers allow adaptation to diverse operating conditions.

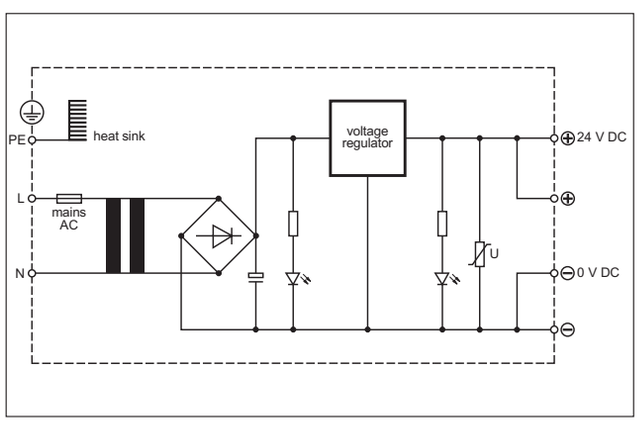

Circuit diagram of a conventional transformer power supply.

Switched-mode power supplies

Primary switched-mode power supplies are a compact and economical solution to supply sensors, actuators and sensitive electronic components and are gaining more and more acceptance.

As opposed to conventional transformer power supplies with regulated output voltage primary switched-mode power supplies need no heavy transformers so that there are fewer iron and copper losses. They are therefore distinguished by a very high degree of efficiency of up to 92 %. Due to the operating principle by means of high frequency transformers switched-mode power supplies are much smaller and lighter than transformer power supplies with identical power. Nevertheless they guarantee an electrical separation which is equivalent to that of transformer power supplies according to VDE 0551. Furthermore, they offer a wide input voltage range as standard, e.g. 340 to 576 V AC. This makes them fit for worldwide use.

ifm switched-mode power supplies have a regulated output voltage of typ. 24 V DC with a tolerance of ± 2 %. Apart from few exceptions the output voltage can be set between 24 V and 28 V to compensate for example for a voltage drop on long cables. Between no load and full load they ensure a stable supply voltage and thus operational reliability in case of supply voltage fluctuations. Mains fluctuations up to ± 15 % and mains interference are compensated for and not passed on to the load.
Even mains voltage dips of a few milliseconds are compensated for, the output voltage is completely maintained.
An active inrush current limitation reduces the inrush current by means of a fixed resistor which is bridged after start up.

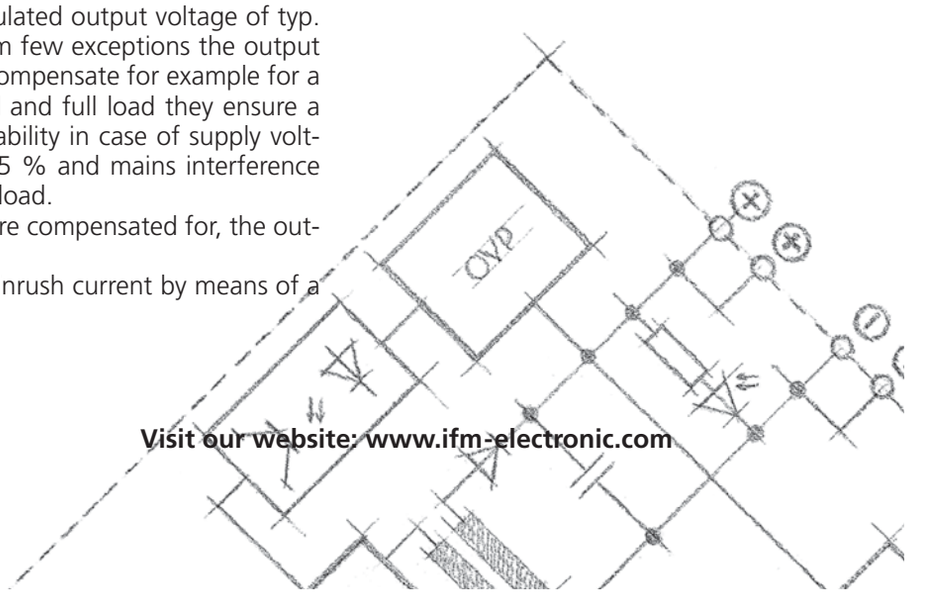

Visit our website: www.ifm-electronic.com

Circuit diagram of a primary switched-mode power supply.

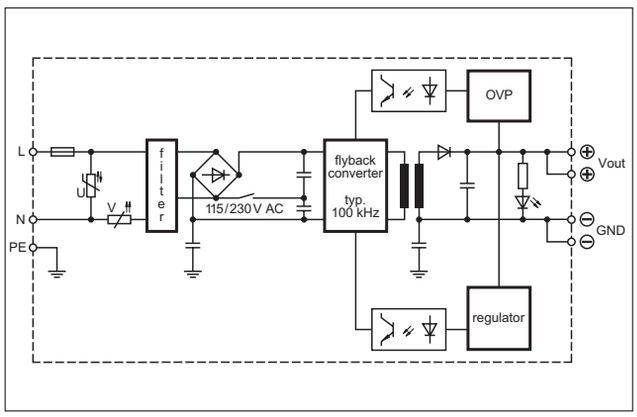

Compared to the normal NTC resistors this has the advantage of a better warm and cold start action, e.g. after short power failures or extremely low operating temperatures.

Output response

The outputs are protected against short circuits and overload. Special output characteristics allow a current which can be up to 1.7 higher than the nominal current without switch-off with the voltage being reduced at the same time. Only with few power supplies the output begins to cycle (hickup mode at < 14 V). The outputs are also protected against no load operation, i.e. they need no minimum load at the output.
Power supplies of the latest generation have two selectable output responses, the "overload mode" as described above and the "switch-off mode" where the output is switched off after a few seconds in case of a short circuit.

Power reserves

The dimensioning of the components allows a 20 to 25 % higher output current for a short time. This power reserve is provided by all power supplies as from 2.5 A for a period of one minute. At an operating temperature of up to 45°C this power is available continuously.

Mounting and connection

By means of the new mounting technology all power supplies can be safely and tightly mounted on a TS 35 DIN rail which is 7.5 or 15 mm high. They can be removed without a tool. For the electrical connection stable screw terminals are used for cables up to 6 mm^2 or 2 x 2.5 mm^2 with a 1 A power supply.

Important: EMC

All switched-mode power supplies of 2.5 to 40 A comply with EN 50081 (noise emission) and EN 50082 (noise immunity) in the severest class. Furthermore, they are fitted with a radio interference suppressor in the output so that even long, unscreened cables do not radiate.

The more powerful power supplies have an active transient filter to make voltage spike on the side of the mains harmless. Thanks to the active inrush current limitation which is also effective for warm units common circuit-breakers can be used for protection. The integrated phase monitoring for three-phrase inputs prevents the unit and mains from being overloaded if one phase fails. With these features it is ensured that the CE certification also covers EMC. Concerning the international approvals EN 60950, UL1950, CUL CSA-C22.2 the power supplies already comply with the future standard EN 50178.



Suitable for the application: ifm provides power supplies in different power classes.

Housing		Description	Appli-cation	Page
Standard signal evaluation and display				
type AL 	monitor	programmable threshold relay for standard signals with integrated comparator	●	182
type AX 	LED display	display of physical quantities from analogue standard signals	●	184
type LC 	LCD display	display of physical quantities from analogue standard signals via 3 1/2-digit LCD display	●	184

For industrial applications

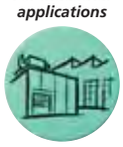

Selection chart

Housing		Nominal voltage AC [V]	Output voltage DC [V]	Output current [A]	Application	Page
Transformer power supplies / Switching amplifiers						
type N 600 	1 channel	110 / 230	24	0.1	●	186
type N 600 	2 channels	110 / 230	24	0.3	●	186
type T 700 	1 channel with timer function	110 / 230	24	0.04	●	186
Switched-mode power supplies single phase						
type DN 	1~	100...240	24...28	1.3 or 2.1	●	188
type DN 	1~	100...240	24...28	4.1	●	188
type DN 	1~	115 / 230 selectable	24	2.5	●	188
type DN 	1~	115 / 230 selectable	12...15	3	●	188
type DN 	1~	115 / 230 selectable	24	5	●	188

For industrial applications

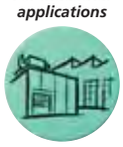

Housing		Nominal voltage AC [V]	Output voltage DC [V]	Output current [A]	Application / Page	
Switched-mode power supplies single phase						
 **type DN**	1~	115 / 230 selectable	24...28 adjustable	10	●	188
 **type DN**	1~	115 / 230 or 230	24...28 adjustable	20	●	188
Switched-mode power supplies three-phase						
 **type DN**	3~	3 x 400...500	24...28 adjustable	5	●	188
 **type DN**	3~	3 x 400...500	24...28 adjustable	10	●	188
 **type DN**	3~	3 x 400 or 3 x 400...500	24...28 adjustable	20	●	188
 **type DN**	3~	3 x 400...500	24...28 adjustable	30	●	188
 **type DN**	3~	3 x 400...500	24...28 adjustable	40	●	188

For industrial applications

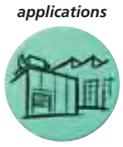

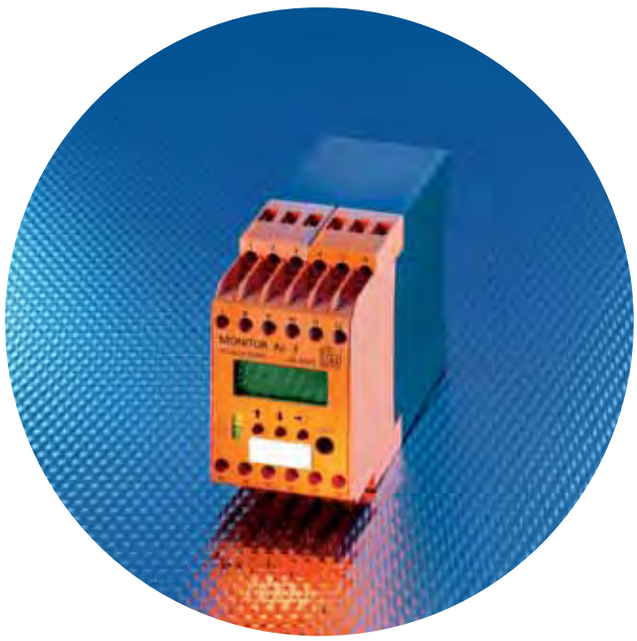

- **Two analogue inputs for 0/4...20 mA.**
- **Scaleable display of the actual values.**
- **Analogue output 0/4...20 mA.**
- **Formation of the signal difference, e.g. for differential pressure monitoring.**
- **RS-232 interface for parameter setting and communication.**

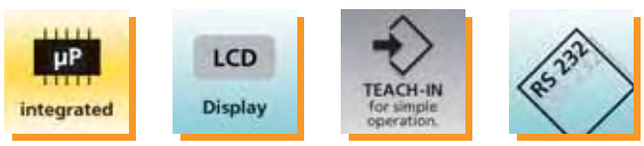

2-channel threshold relay for standard signals

The Monitor AL-3 is a programmable, analogue threshold relay for the evaluation of physical values derived from analogue standard signals.

The analogue current signals at both inputs can be scaled, displayed and monitored independently of each other. The start and end values of the current signal can be assigned any numerical value, corresponding to the measuring range of the sensor (e.g. 4...20 mA corresponding to 0...250 bar). The setting of the limit values is supported by the teach function.

The monitor compares the actual values with the set limit values and switches the assigned outputs depending on the set parameter values and functions. At the same time the analogue output provides the input signal IN 1 unchanged or scaled for further use. The differential or the total value from the two input signals can also be displayed, evaluated, compared with the set limit values, and provided as analogue signal.

Application

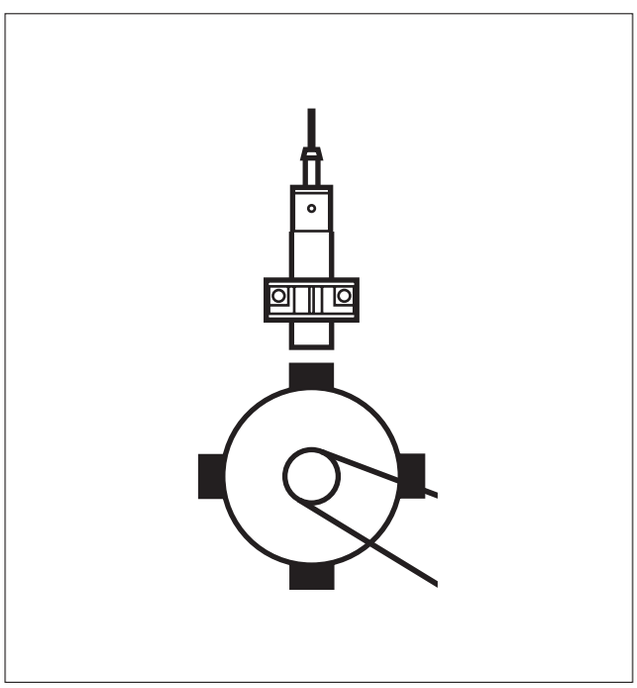

	For industrial applications	Standard signal evaluation and display		For industrial applications	Transformer power supplies	Switched-mode power supplies
Amplifiers		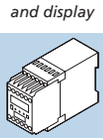	Power supplies		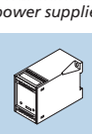	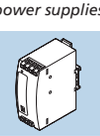
Page		182 - 185			186 - 187	188 - 189

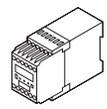

Monitor AL-3
2-channel analogue threshold relay for standard signals with integrated comparator

U_b [V]	In-puts	Input function	Setting range	Out-puts analog	Out-puts relays	Out-puts transist.	Out-puts faults	Draw-ing no.	Order no.
110...240 AC/DC / 24 DC	2	0/4...20	-9999.0...9999.0	1	2	2	1	1	**DL2003**

Front view

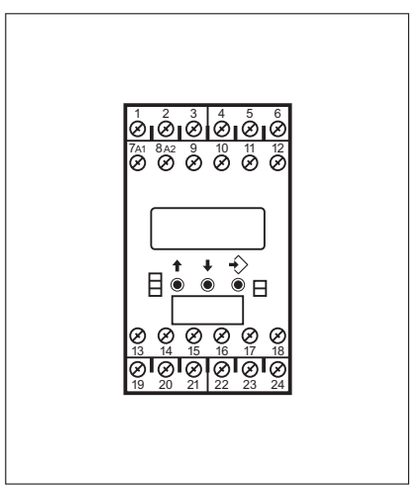

The monitor AL-3 can be parameterised via programming cable or software via Internet Explorer by means of a PC. To do so, the RS-232 interface is accessible at the front via a 3.5 mm jack socket. For series applications the user can "copy" a parameter setting once set into any number of units. The values of the input signals can be read via PC with an online connection by means of a serial interface.

Terminal connection

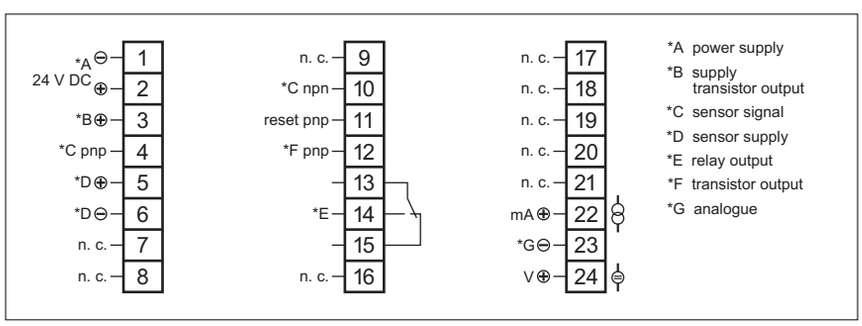

You can find scale drawings from page 253

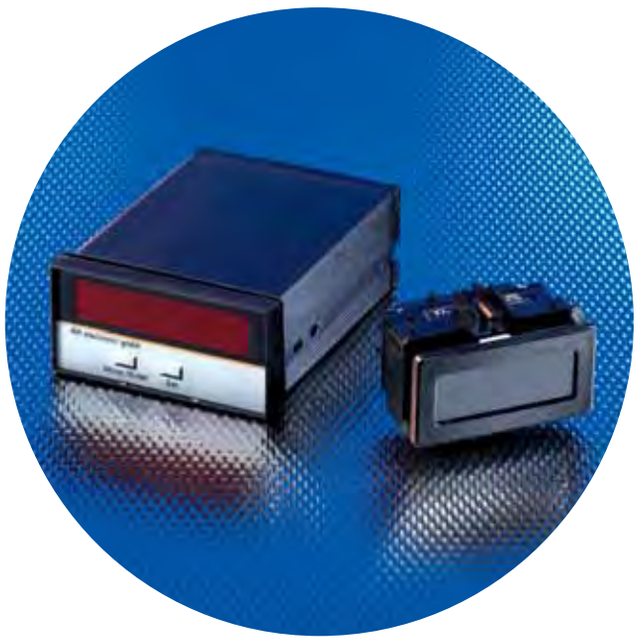

- **For the display of process quantities.**
- **Input for analogue standard signals 0/4...20 mA / 0...10 V.**
- **LED display, programmable, with switching output.**
- **LCD display supplied from a current loop.**
- **Display and monitoring of e. g. pressure differences (diff. pressure).**

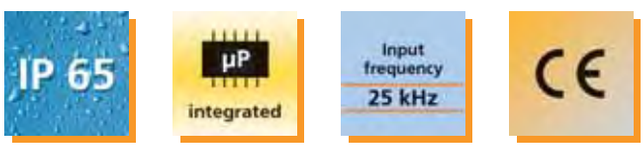

Indication of physical process values.

In process technology local visualisation of current process values, e.g. flow, pressure or temperature may be important for the operator of an installation. Typical sensors for these applications supply a digital switched signal informing whether limit values have been reached or are above or below preset values. Other sensors or transmitters supply a standard analogue signal which can be used by digital displays and indicated as current or voltage value.

But when pressure or temperature sensors supply a linear output signal proportional to the measured quantity this scaleable display can directly indicate the measured pressure or temperature values. Thus two pressure sensors can also display and monitor pressure differences. With the suitable flow sensors it is possible to display flow velocities or quantities (e.g. litres per minute) or the difference of volume flows.

Application

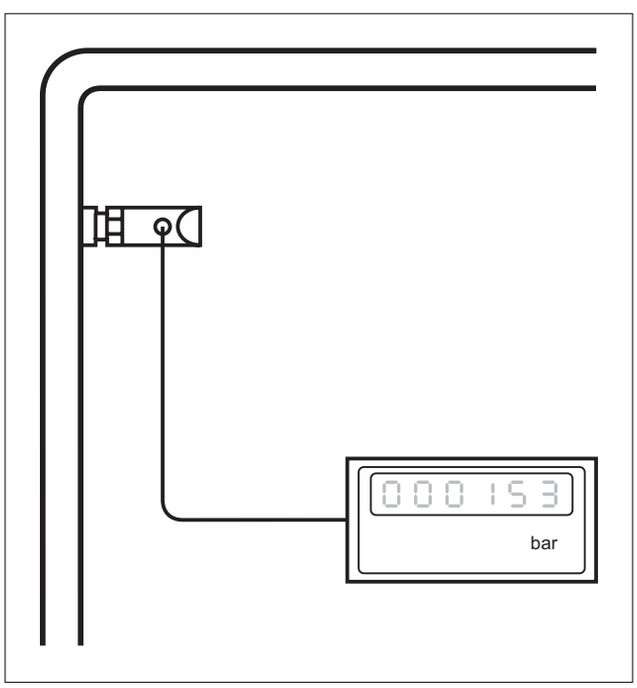

	For industrial applications	Standard signal evaluation and display		For industrial applications	Transformer power supplies	Switched-mode power supplies	
Amplifiers		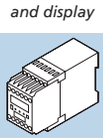	Power supplies		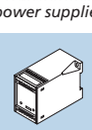	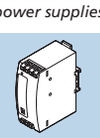	
Page		182 - 185			186 - 187	188 - 189	

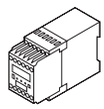

Digital displays
AX360: DX2011, DX2012; 6-digit LED display with 15 mm character height, switching output
LCD display, 3 1/2-digit, without auxiliary energy, supply from the 4...20 mA current loop

U_b [V]	In-puts	Input function	Display range	Out-puts analog	Out-puts relays	Out-puts transist.	Out-puts faults	Draw-ing no.	Order no.
Digital display									
115 / 230 AC; 24 DC	2	0/4...20mA, 0...10V	-999999...999999	–	–	–	–	2	**DX2011**
115 / 230 AC; 24 DC	2	0/4...20mA, 0...10V	-999999...999999	–	–	2	–	2	**DX2012**
LC display									
from the current loop	1	4...20mA	-1999...1999	–	–	–	–	3	**E89150**

Front view E89150

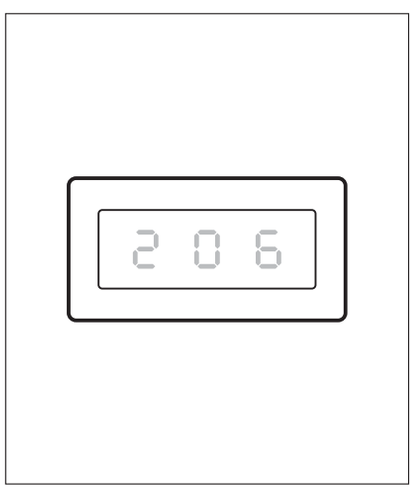

The parameters of the AX 360 are set by means of a display and 2 buttons on the front panel. Standard parameters like scaling factor, averaging and switch points can be set as well as operating modes like "input A – input B" or "input A + input B". The LCD display is set using potentiometers for course and fine setting of the initial and final values.

Terminal connection DX2011, DX2012

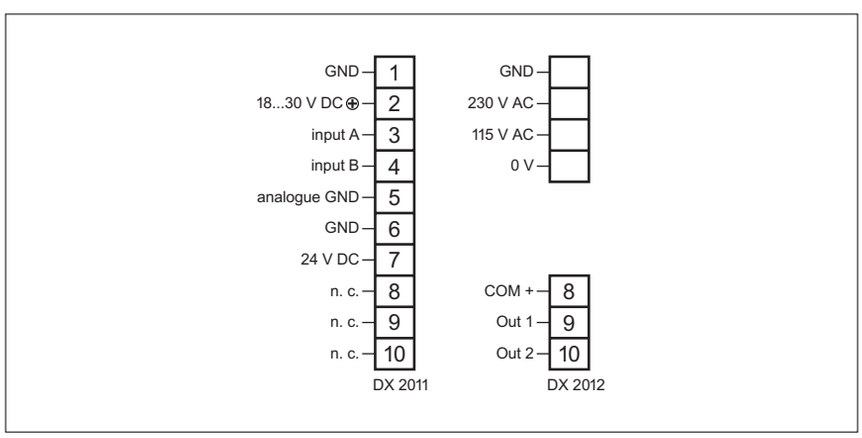

For other terminal connections see www. ifm-electronic.com

You can find scale drawings from page 253

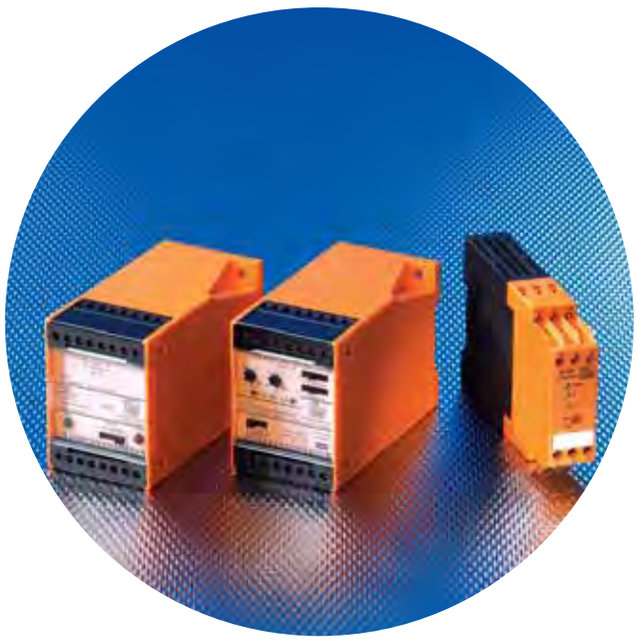

- One- and two-channel versions.
- Regulated 24 V DC output voltage.
- Suitable for pnp or npn switching sensors.
- Output short-circuit protected.
- Also available with integrated timer function.









Power supplies for sensors / switching amplifiers.

Transformer power supplies provide a low voltage (normally 24 V DC) to supply PLC, sensors or evaluation electronics. A transformer according to DIN 0551 ensures a safe electrical separation from mains voltage and low voltage. The output voltage can be regulated or smoothed by means of capacitors.

The switching amplifiers have a transformer power supply with a 24 V DC output voltage. This voltage is used to supply a sensor. Since sensors normally have solid-state outputs with typically 24 V DC and approx. 250 mA , they cannot switch high loads. If the outputs of the sensors are connected to the input of the switching amplifiers, a relay with a potential-free change-over contact is switched. This allows switching of higher loads or AC voltages. One-channel switching amplifiers are suitable for a sensor with one output, the two-channel types are suitable for a sensor with two outputs or two sensors with one output each. Current consumption must be taken into account.

Schematics

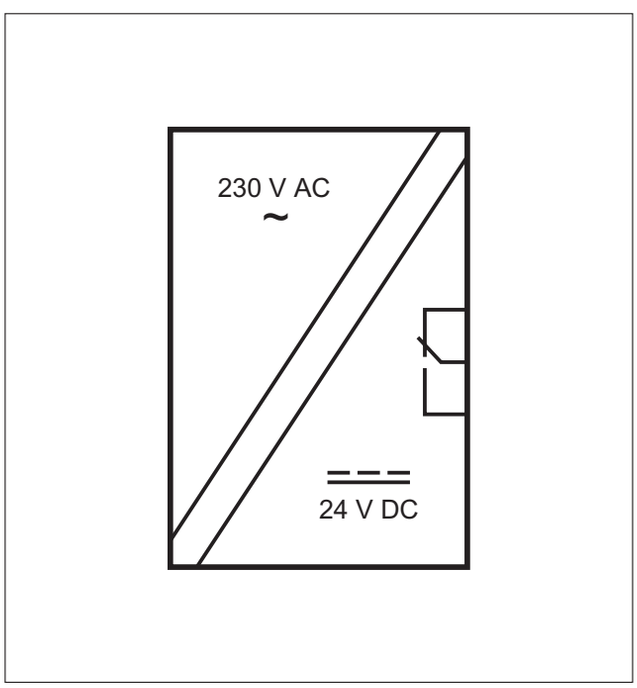

Amplifiers
For industrial applications
Standard signal evaluation and display
Page 182 - 185
Power supplies
For industrial applications
Transformer power supplies
Switched-mode power supplies
Page 186 - 187
Page 188 - 189



Switching amplifier 1-channel (DN0001, DN0012)
Switching amplifier 1-channel with timer function (DT0001, DT0012)
Switching amplifier 2-channel (DN0200)

Current [mA]	Output voltage [V]	Nominal voltage [V]	Output	Drawing no.	Order no.
max. 100 mA	24 DC; ±5%	230 AC	Relais	1	**DN0001**
max. 100 mA	24 DC; ±5%	110 AC	Relais	1	**DN0012**
max. 300 mA	24 V DC; ± 3 %	110...240 AC	Relais	2	**DN0200**
max. 40 mA	24 DC; ±5%	230 AC / 24 DC	Relais	1	**DT0001**

Front view DN0200

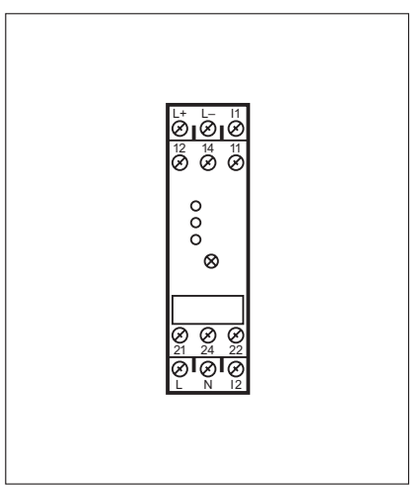

Terminal connection DN0001, DN0012, DT0001, DT0012

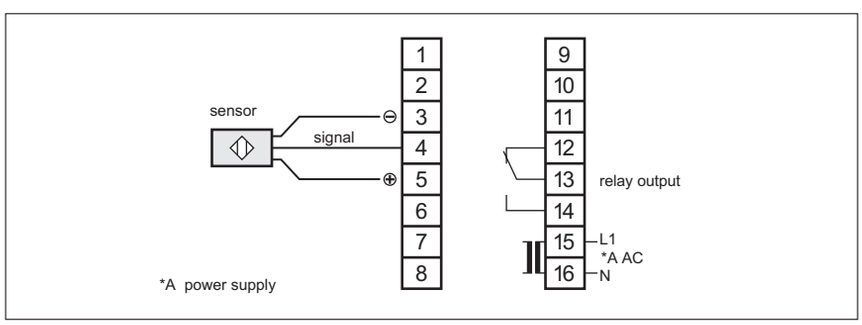

Terminal connection DN0200

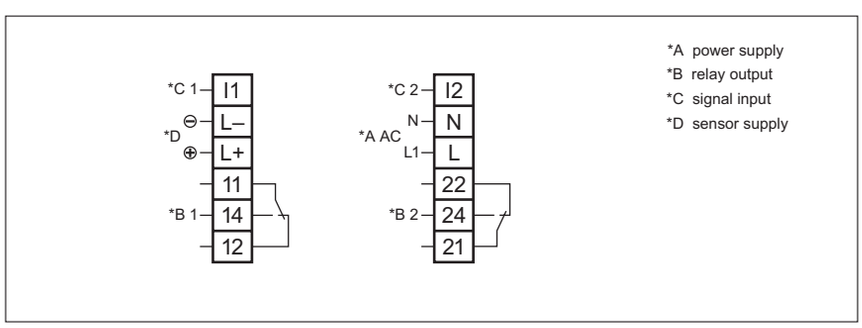

You can find scale drawings from page 254



- **Regulated 24 V DC output voltage.**
- **Wide input voltage range.**
- **High efficiency.**
- **Output short-circuit and overload protected.**
- **Robust metal housing, secure fixing.**









Switched-mode power supplies.

Primary switched-mode power supplies are a compact and economical solution to supply sensors, actuators and sensitive electronic components in machines and installations and are gaining more and more acceptance. As opposed to conventional transformer power supplies with regulated output voltage primary switched-mode power supplies need no heavy 50 Hz transformers so that there are fewer iron and copper losses – just a small high frequency power transformer is needed. Between no load and full load switched-mode power supplies ensure a stable supply voltage and thus operational reliability even in case of supply voltage fluctuations, for mains fluctuations up to ± 15 % and mains interference are compensated for and not passed on to the load. Even mains voltage dips of a few milliseconds are compensated for so that the output voltage is completely maintained. All types are electronically protected against overvoltage (OVP) and permanent short circuit. The electrical design is equivalent to that of safety transformers according to VDE 0551.

Schematics

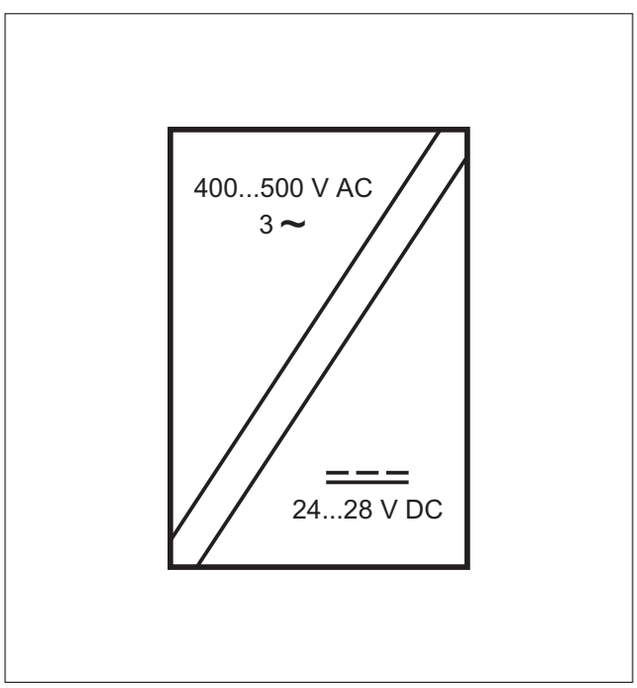

	For industrial applications	Standard signal evaluation and display		For industrial applications	Transformer power supplies	Switched-mode power supplies
Amplifiers		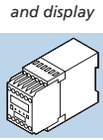	Power supplies		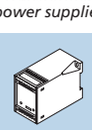	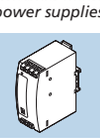
Page		182 - 185			186 - 187	188 - 189

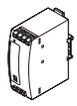

Power supplies single-phase
Power supplies three-phase

Current [A]	Output voltage [V]	Nominal voltage [V]	Efficiency typ. [%]	Terminal connection Nr.	Drawing no.	Order no.
2.5	24 DC (+5% / -1%)	115 / 230 AC	87.5	4	3	**DN2011**
1.3	24...28 DC (±2%)	115 / 230 AC	87.5	4	4	**DN1020**
2.1	24...28 DC (±2%)	115 / 230 AC	88.5	4	4	**DN1021**
3	12...15 DC (±2%)	115 / 230 AC	87	4	5	**DN2021**
4	24 DC (+5% / -1%)	115 / 230 AC	90	4	6	**DN2112**
4.1	24...28 DC (±2%)	115 / 230 AC	90	4	7	**DN1022**
5	24 DC (+5% / -1%)	115 / 230 AC	90	4	6	**DN2012**
10	24...28 DC (±2%)	115 / 230 AC	90	4	8	**DN2013**
20	24...28 DC (±2%)	230 AC	91	4	9	**DN2014**
20	24...28 DC, ±2%	115 / 230 AC	90	4	9	**DN2114**
5	24...28 DC (±2%)	3 x 400...500 AC	89	4	10	**DN2032**
10	24...28 DC (±2%)	3 x 400...500 AC	90	4	11	**DN2033**
20	24...28 DC (±2%)	3 x 400 AC	92	4	12	**DN2034**
20	24...28 DC (±2%)	3 x 400...500 AC	92	4	13	**DN2134**
30	24...28 DC (±2%)	3 x 400...500 AC	93	4	14	**DN2036**
40	24...28 DC (±2%)	3 x 400...500 AC	92.5	4	15	**DN2035**

Front view DN2012

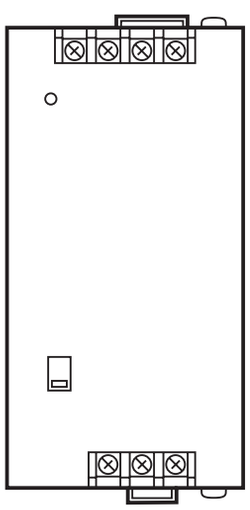

You can find scale drawings from page 254

Terminal connection

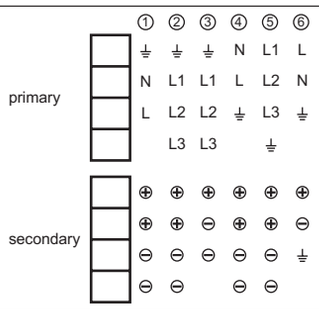

Terminal connection

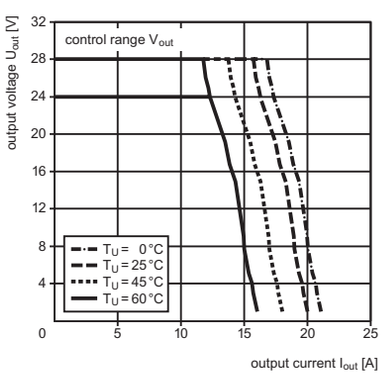



Connection technology

ecomat 400

Complete ifm product range

System description 192 - 193
Selection chart 194 - 196

Universal application



Connectors and splitter boxes for industrial applications

Sockets 198 - 204
Cable plugs 205
Cables 206 - 207
Splitter boxes 208 - 210

Special application



Connectors for oils and coolants

Sockets 211



Connectors and splitter boxes for hygienic and wet areas

Sockets 212 - 214
Cable plugs 213 - 214
Cables 213
Splitter boxes 214



Connectors for hazardous areas

Sockets 215
Cable plugs 215
Cables 215

Introduction

The electrical connection of the sensors via connectors has become more and more important in the last few years. Easy handling and high uptime of the machines are of prime importance for the customer. This requires extremely reliable products.

With a wide variety of different sensor designs ifm electronic offers a wide range of high quality connectors. The choice of types covers common M8, M12, M18 types through to solenoid connectors.

In addition to the sockets the basic range covers connection cables (jumpers) and splitter boxes. These are used where several sensors are mounted close together and must then be connected to the panel across longer distances.

The M12 design in particular has become firmly established on the sensor market for many years and is therefore the preferred choice for extremely harsh applications.
To be able to meet the different application requirements three product series have been developed with the following application focus.

M12 series with cable for factory automation:





The ifm standard series for industrial use. Halogen-free PUR cable with high resistance to alternate bending stress, PUR housing material, gold-plated contacts and protection rating IP 68 guarantee long life in an oily and greasy environment. The international UL and CSA approval means these units are accepted anywhere in the world market.

M12 series with cable for the food industry:



This series is specially designed for hygienic areas in food manufacture. High quality PVC cable and housing materials, coupling nuts of high-grade stainless steel (316S12) as well as gold-plated contacts are ideal features for use in wet areas. The high protection ratings IP 67, IP 68 and IP 69K withstand high-pressure steam cleaning. They are chemically resistant to most common cleaning agents. The UL / CSA approval is a matter of course for these units.

M12 series with cable for hazardous areas:



When using sockets in explosion-protected areas to 94/9/EC (ATEX) there are special requirements for wiring. The requirements of the applicable installation regulations must be absolutely adhered to by the user on his own responsibility. More information is given in the EC type test certificate, operating instructions and the technical data sheet of the corresponding units.



ifm plug and socket connections: the right connection for every application.

Visit our website: www.ifm-electronic.com

Visit our website: www.ifm-electronic.com

Description	For industrial applications	For oils and coolants	For hygienic and wet areas	For hazardous areas
				
	from page 189	from page 210	from page 212	from page 214
Sockets – Groups				
Socket M8, 3-pole, 3-wire	1			
Socket M8, 3-pole, 3-wire, LED, PNP	2			
Socket M8, 4-pole, 4-wire	3		57	
Socket M12, 2-pole, for AS-i isolation displacement connector	4			
Socket M12, 2-pole + PE, 3-wire	5			
Socket M12, 5 / 4-pole, 2-wire, for quadronorm units	6			
Socket M12, 4-pole, 4-wire	7	55		65
Socket M12, 4-pole	8		58	
Socket M12, 4-pole, 4-wire, LED, PNP	9	56		
Socket M12, 4-pole, LED, PNP	10		59	
Socket M12, 5-pole			62	
Socket M12, 5-pole, 5-wire	11			66 / 67
Socket M12, 8-pole, 6-wire	12 / 13			
Socket M12, 8-pole, 7-wire	14			
Socket M12, 8-pole, 8-wire, for temperature sensors TR 8...	15			
Socket M16, 14-pole, 10-wire	16			
Socket M16, 14-pole, 12-wire	17			
Socket M18, 4-pole	18			
Socket M18, 12-pole	19			
Socket M23, 12-pole, pin numbering anticlockwise, for splitter boxes	20			
Socket M23, 12-pole, external thread, pin numbering clockwise, for encoders	21			
Socket M23, 12-pole, pin numbering clockwise, for encoders	22			
Cable plug M23, 12-pole, pin numbering anticlockwise, for encoders	23			
Socket M23, 17-pole, pin numbering clockwise, for encoders	24			
Socket M23, 21-pole, pin numbering clockwise, for encoders	25			
Socket M23, 12-pole for splitter boxes	26			
Socket M23, 19-pole for splitter boxes	27			

Description	For industrial applications 	For oils and coolants 	For hygienic and wet areas 	For hazardous areas 
	from page 189	from page 210	from page 212	from page 214
Sockets – Groups				
Socket 1/2", 2-pole + PE, 3-wire	28			
Socket 1/2", 5-pole, 4-wire	29			
Socket 7/8", 2-pole + PE, 3-wire	30			
Socket 7/8", 3-pole, 3-wire	31			
Socket DIN A, 2-pole + PE	32			
Socket RD24, 6-pole + PE	33			
Bayonet socket, for pressure sensors PP	34			
Cable plugs – Groups				
Cable plugs M12, 2-pole + PE, 2-wire	35			
Cable plugs M12, 4-pole	36		60	
Cable plugs M12, 5-pole	37		63	
Cable plugs M12, 5-pole, 2-wire				68
Cable plugs M23, 12-pole, pin numbering clockwise, for encoders	38			
Cables – Groups				
Jumper M8 plug, 4-pole / M8 socket, 3-pole	39			
Jumper M8 plug, 3-pole / M8 socket, 4-pole	40			
Jumper M8 plug, 4-pole / M8 socket, 4-pole	41			
Jumper M12 plug, 4-pole / M8 socket, 4-pole	42			
Jumper M12, 3-pole, 3-wire, LED	43			
Jumper M12, 4-pole, 4-wire	44		61	
Jumper M12 / DIN A, 3 / 4-pole, 3-wire, LED	45			69
Jumper M12 / DIN B, 3-pole, 3-wire, LED	46			70
Jumper M12 / DIN C, 3 / 4-pole, 3-wire, LED	47			71
Jumper M12, ind. standard B, 3-pole, 3-wire, LED	48			72
Jumper M12 plug, 4-pole / socket bayonet	49			
Y-jumper M12 plug / 2 x valve plug type A (to DIN 43650)	50			

Description	For industrial applications	For oils and coolants	For hygienic and wet areas	For hazardous areas
				
	from page 189	from page 210	from page 212	from page 214
Splitter boxes – Groups				
Splitter box M8, 3-pole	51			
Splitter box M8, 4-pole	52			
Splitter box M12 for 1 signal	53		64	
Splitter box M12 for 2 signals	54			

Type	Cable	Core specification	Material housing / nut	U [V]	T_a [°C]	Protection	Gold-contacts	LEDs	Drawing no.	Order no.
Group 1 · Socket M8, 3-pole, 3-wire										
	2 m black PUR cable	3 x 0.25 mm² Ø 4.1 mm	PUR / brass	60 AC 75 DC	-25...85	IP 68	•	–	1	**E11486**
	5 m black PUR cable	3 x 0.25 mm² Ø 4.1 mm	PUR / brass	60 AC 75 DC	-25...85	IP 68	•	–	1	**E11487**
Group 2 · Socket M8, 3-pole, 3-wire, LED, PNP										
	2 m black PUR cable	3 x 0.25 mm² Ø 4.1 mm	PUR / brass	10...30 DC	-25...85	IP 68	•	green / yellow	2	**E11492**
	5 m black PUR cable	3 x 0.25 mm² Ø 4.1 mm	PUR / brass	10...30 DC	-25...85	IP 68	•	green / yellow	2	**E11493**
Group 3 · Socket M8, 4-pole, 4-wire										
	2 m black PUR cable	4 x 0.25 mm² Ø 5 mm	PUR / brass	60 AC 75 DC	-25...80	IP 68	•	–	3	**E11199**
	5 m black PUR cable	4 x 0.25 mm² Ø 5 mm	PUR / brass	60 AC 75 DC	-25...80	IP 68	•	–	3	**E11200**
	10 m black PUR cable	4 x 0.25 mm² Ø 5 mm	PUR / brass	60 AC 75 DC	-25...80	IP 68	•	–	3	**E11201**
	2 m black PUR cable	4 x 0.25 mm² Ø 5 mm	PUR / brass	60 AC 75 DC	-25...80	IP 68	•	–	4	**E11196**
	5 m black PUR cable	4 x 0.25 mm² Ø 5 mm	PUR / brass	60 AC 75 DC	-25...80	IP 68	•	–	4	**E11197**
	10 m black PUR cable	4 x 0.25 mm² Ø 5 mm	PUR / brass	60 AC 75 DC	-25...80	IP 68	•	–	4	**E11198**
Group 4 · Socket M12, 2-pole for AS-i isolation displacement connector										
	–	–	NBR	–	-25...70	IP 67	–	–	5	**E70271**
Group 5 · Socket M12, 2-pole + PE, 3-wire										
	2 m orange PVC cable	3 x AWG 22 (3 x 0.34 mm²)	TPU / brass	250 AC 300 DC	-25...90	IP 67	–	–	6	**E10865**
	5 m orange PVC cable	3 x AWG 22 (3 x 0.34 mm²)	TPU / brass	250 AC 300 DC	-25...90	IP 67	–	–	6	**E10866**
	2 m orange PVC cable	3 x AWG 22 (3 x 0.34 mm²)	TPU / brass	250 AC 300 DC	-25...90	IP 67	–	–	7	**E10867**
	5 m orange PVC cable	3 x AWG 22 (3 x 0.34 mm²)	TPU / brass	250 AC 300 DC	-25...90	IP 67	–	–	7	**E10868**
Group 6 · Socket M12, 5/4-pole, 2-wire										
	2 m orange PUR / PVC cable	2 x 0.34 mm² Ø 5 mm	TPU / brass	250 AC 300 DC	-25...90	IP 67	–	–	8	**E10188**
	5 m orange PUR / PVC cable	2 x 0.34 mm² Ø 5 mm	TPU / brass	250 AC 300 DC	-25...90	IP 67	–	–	8	**E10214**

	For industrial applications	Sockets	Cable plugs	Cables	Splitter boxes	For oils and coolants	For hygienic areas and viscous media	For hazardous areas
Complete ifm product range				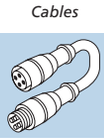	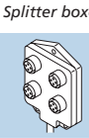			
Page		198 - 204	204 - 205	206 - 207	208 - 210	210 - 211	212 - 214	214 - 215

Type	Cable	Core specification	Material housing / nut	U [V]	T_a [°C]	Protection	Gold-contacts	LEDs	Drawing no.	Order no.
Group 6 · Socket M12, 5/4-pole, 2-wire										
	2 m black PUR / PVC cable	2 x 0.34 mm² Ø 5 mm	TPU / brass	250 AC 300 DC	-25...90	IP 67	–	–	9	**E10216**
	5 m orange PUR / PVC cable	2 x 0.34 mm² Ø 5 mm	TPU / brass	250 AC 300 DC	-25...90	IP 67	–	–	9	**E10215**
Group 7 · Socket M12, 4-pole, 4-wire										
	2 m black PUR cable	4 x 0.34 mm² Ø 4.9 mm	TPU / brass	250 AC 300 DC	-25...90	IP 68 / IP 69K	•	–	10	**EVC004**
	5 m black PUR cable	4 x 0.34 mm² Ø 4.9 mm	TPU / brass	250 AC 300 DC	-25...90	IP 68 / IP 69K	•	–	10	**EVC005**
	10 m black PUR cable	4 x 0.34 mm² Ø 4.9 mm	TPU / brass	250 AC 300 DC	-25...90	IP 68 / IP 69K	•	–	10	**EVC006**
	2 m black PUR cable	4 x 0.34 mm² Ø 4.9 mm	TPU / brass	250 AC 300 DC	-25...90	IP 68 / IP 69K	•	–	11	**EVC001**
	5 m black PUR cable	4 x 0.34 mm² Ø 4.9 mm	TPU / brass	250 AC 300 DC	-25...90	IP 68 / IP 69K	•	–	11	**EVC002**
	10 m black PUR cable	4 x 0.34 mm² Ø 4.9 mm	TPU / brass	250 AC 300 DC	-25...90	IP 68 / IP 69K	•	–	11	**EVC003**
Group 8 · Socket M12, 4-pole										
	wirable	–	PA / brass	125 AC 150 DC	-25...90	IP 68 / IP 69 K	–	–	12	**E11302**
	wirable	...0.75 mm² (Ø 4...6 mm)	PA / brass	250 AC/DC	-25...100	IP 68	•	–	13	**E11509**
	wirable	...0.75 mm² (Ø 4...6 mm)	PA / brass	250 AC/DC	-25...100	IP 68	•	–	14	**E11508**
Group 9 · Socket M12, 4-pole, 4-wire, LED, PNP										
	2 m black PUR cable	4 x 0.34 mm² Ø 4.9 mm	TPU / brass	10...36 DC	-25...90	IP 68 / IP 69K	•	green / 2 x yel.	15	**EVC007**
	5 m black PUR cable	4 x 0.34 mm² Ø 4.9 mm	TPU / brass	10...36 DC	-25...90	IP 68 / IP 69K	•	green / 2 x yel.	15	**EVC008**
	10 m black PUR cable	4 x 0.34 mm² Ø 4.9 mm	TPU / brass	10...36 DC	-25...90	IP 68 / IP 69K	•	green / 2 x yel.	15	**EVC009**
Group 10 · Socket M12, 4-pole, LED, PNP										
	wirable	...0.75 mm² (Ø 4...6 mm)	PA / brass	10...30 DC	-25...100	IP 68	•	green / yellow	16	**E11510**

General information
List of articles
Level sensors
Flow sensors
Pressure sensors
Temperature sensors
Diagnostic systems
Evaluation systems, power supplies
Connection technology
Accessories
Technical information and customer service

Complete ifm product range

	For industrial applications	Sockets	Cable plugs	Cables	Splitter boxes	For oils and coolants	For hygienic areas and viscous media	For hazardous areas
Page		198 - 204	204 - 205	206 - 207	208 - 210	210 - 211	212 - 214	214 - 215

Type	Cable	Core specification	Material housing / nut	U [V]	T_a [°C]	Protection	Gold-contacts	LEDs	Drawing no.	Order no.
Group 10 · Socket M12, 4-pole, LED, PNP										
	wirable	...0.75 mm² (Ø 4...6 mm)	PA	10...30 DC	-40...85	IP 67	–	green / yellow	17	**E10136**
Group 11 · Socket M12, 5-pole										
	2 m black PUR cable	5 x 0.34 mm² Ø 4.9 mm	TPU / brass	30 AC 36 DC	-25...90	IP 68 / IP 69K	•	–	18	**EVC073**
	5 m black PUR cable	5 x 0.34 mm² Ø 4.9 mm	TPU / brass	30 AC 36 DC	-25...90	IP 68 / IP 69K	•	–	18	**EVC074**
	10 m black PUR cable	5 x 0.34 mm² Ø 4.9 mm	TPU / brass	30 AC 36 DC	-25...90	IP 68 / IP 69K	•	–	18	**EVC075**
	2 m black PUR cable	5 x 0.34 mm² Ø 4.9 mm	TPU / brass	30 AC 36 DC	-25...90	IP 68 / IP 69K	•	–	19	**EVC070**
	5 m black PUR cable	5 x 0.34 mm² Ø 4.9 mm	TPU / brass	30 AC 36 DC	-25...90	IP 68 / IP 69K	•	–	19	**EVC071**
	10 m black PUR cable	5 x 0.34 mm² Ø 4.9 mm	TPU / brass	30 AC 36 DC	-25...90	IP 68 / IP 69K	•	–	19	**EVC072**
Group 12 · Socket M12, 8-pole, 6-wire										
	5 m black PUR / PVC cable	6 x 0.34 mm² Ø 6 mm	TPU / brass	30 AC 36 DC	-25...90	IP 67	–	–	20	**E10976**
Group 13 · Socket M12, 8-pole, 6-wire										
	10 m black PUR / PVC cable	6 x 0.34 mm² Ø 6 mm	TPU / brass	30 AC 36 DC	-25...90	IP 67	–	–	20	**E10977**
Group 14 · Socket M12, 8-pole, 7-wire + screen										
	2 m orange PUR cable	7 x 0.25 mm² + screen	TPU / brass	30 AC 36 DC	-25...90	IP 67	–	–	20	**E20738**
Group 15 · Socket M12, 8-pole, 8-wire, for temperature sensors TR 8...										
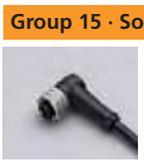	2 m black PUR cable	8 x 0.25 mm² Ø 6.2 mm	PUR / brass	30 AC 36 DC	-25...80	IP 68	•	–	21	**E11231**
	5 m black PUR cable	8 x 0.25 mm² Ø 6.2 mm	PUR / brass	30 AC 36 DC	-25...80	IP 68	•	–	21	**E11232**
	10 m black PUR cable	8 x 0.25 mm² Ø 6.2 mm	PUR / brass	30 AC 36 DC	-25...80	IP 68	–	–	22	**E11311**

	For industrial applications	Sockets	Cable plugs	Cables	Splitter boxes	For oils and coolants	For hygienic areas and viscous media	For hazardous areas
Complete ifm product range			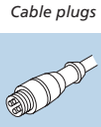	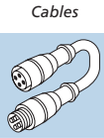	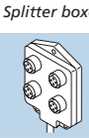			
Page		198 - 204	204 - 205	206 - 207	208 - 210	210 - 211	212 - 214	214 - 215

Type	Cable	Core specification	Material housing / nut	U [V]	T_a [°C]	Protection	Gold-contacts	LEDs	Drawing no.	Order no.
Group 16 · Socket M16, 14-pole, 10-wire										
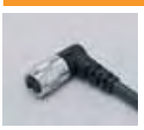	5 m black PUR cable	8 x 0.34 mm² + 2 x 0.75 mm²	PUR / brass	30 DC	-25...90	IP 68	–	–	23	**E11226**
	10 m black PUR cable	8 x 0.34 mm² + 2 x 0.75 mm²	PUR / brass	30 DC	-25...90	IP 68	–	–	23	**E11227**
Group 17 · Socket , 14-pole, 12-wire										
	2 m black PUR cable	10 x 0.25 mm² + 2 x 0.34 mm²	PUR / brass	30 DC	-25...90	IP 67	–	–	24	**E11645**
	5 m black PUR cable	10 x 0.25 mm² + 2 x 0.34 mm²	PUR / brass	30 DC	-25...90	IP 67	–	–	24	**E11697**
Group 18 · Socket M18, 4-pole										
	wirable	...0.75 mm² (Ø 6...8 mm)	PA	20...250 AC/DC	-40...85	IP 65	–	–	25	**E10013**
	wirable	...0.75 mm² (Ø 6...8 mm)	PA / ULTRAMID	20...250 AC/DC	-40...85	IP 65	–	–	26	**E10137**
Group 19 · Socket M18, 12-pole										
	soldering	...0.25 mm² (Ø 6...8 mm)	brass	4.5...30 DC	-40...85	IP 67	–	–	27	**E60174**
	soldering	...0.25 mm² (Ø 6...8 mm)	brass	4.5...30 DC	-40...85	IP 67	–	–	28	**E60175**
Group 20 · Socket M23, 12-pole, numbering anticlockwise										
	soldering	...1 mm² (Ø 10...14 mm)	brass	10...30 DC	-25...90	IP 65	–	–	29	**E10447**
	soldering	...1 mm² (Ø 10...14 mm)	brass	10...30 DC	-25...90	IP 65	–	–	30	**E10448**
Group 21 · Socket M23, 12-pole, numbering clockwise										
	soldering	...1 mm² Ø 8 mm	brass	4.5...30 DC	-40...125	IP 67	–	–	31	**E60124**
Group 22 · Socket M23, 12-pole, numbering clockwise, for encoders										
	soldering	...1 mm² Ø 8 mm	brass	4.5...30 DC	-40...125	IP 67	–	–	32	**E60122**

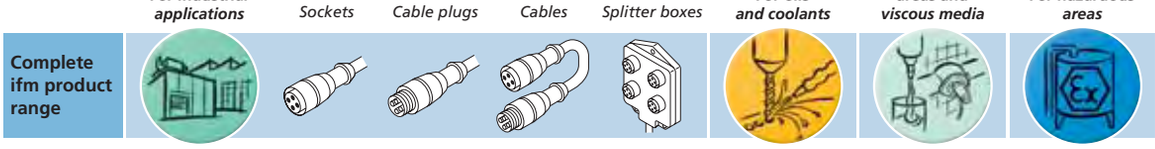

General information
List of articles
Level sensors
Flow sensors
Pressure sensors
Temperature sensors
Diagnostic systems
Evaluation systems, power supplies
Connection technology
Accessories
Technical information and customer service

	Type	Cable	Core specification	Material housing / nut	U [V]	T_a [°C]	Protection	Gold-contacts	LEDs	Drawing no.	Order no.
Group 22 · Socket M23, 12-pole, numbering clockwise, for encoders											
		soldering	...1 mm² (Ø 4.5...6 mm)	brass	4.5...30 DC	-40...125	IP 67	–	–	33	**E60136**
		5 m PUR cable	8 x 0.14 mm² + 4 x 0.5 mm²	brass	4.5...30 DC	-25...80	IP 67	–	–	34	**E60144**
		10 m PUR cable	8 x 0.14 mm² + 4 x 0.5 mm²	brass	4.5...30 DC	-25...80	IP 67	–	–	34	**E60147**
Group 23 · Plug M23, 12-pole, numbering anticlockwise											
		soldering	...1 mm² Ø 8 mm	brass	4.5...30 DC	-40...125	IP 67	–	–	35	**E60141**
Group 24 · Socket M23, 17-pole, numbering clockwise											
		Soldering/crimping connection	...0.5 mm² Ø 8 mm	brass	4.5...30 DC	-40...125	IP 67	–	–	36	**E60157**
Group 25 · Socket M23, 21-pole, numbering clockwise											
		Soldering/crimping connection	...0.5 mm² Ø 8 mm	brass	4.5...30 DC	-40...125	IP 67	–	–	37	**E60146**
Group 26 · Socket , 12-pole											
		5 m black PUR cable	8 x 0.5 mm² + 3 x 1.0 mm²	PUR / brass	250 AC/DC	-25...80	IP 67	–	–	38	**E11736**
		10 m black PUR cable	8 x 0.5 mm² + 3 x 1.0 mm²	PUR / brass	250 AC/DC	-25...80	IP 67	–	–	38	**E11737**
		15 m black PUR cable	8 x 0.5 mm² + 3 x 1.0 mm²	PUR / brass	250 AC/DC	-25...80	IP 67	–	–	38	**E11738**
		5 m black PUR cable	8 x 0.5 mm² + 3 x 1.0 mm²	PUR / brass	250 AC/DC	-25...80	IP 67	–	–	39	**E11739**
		10 m black PUR cable	8 x 0.5 mm² + 3 x 1.0 mm²	PUR / brass	250 AC/DC	-25...80	IP 67	–	–	39	**E11740**
		15 m black PUR cable	8 x 0.5 mm² + 3 x 1.0 mm²	PUR / brass	250 AC/DC	-25...80	IP 67	–	–	39	**E11741**
Group 27 · Socket , J-pole											
		5 m black PUR cable	16 x 0.5 mm² + 3 x 1.0 mm²	PUR / brass	160 AC/DC	-25...80	IP 67	–	–	40	**E11742**
		10 m black PUR cable	16 x 0.5 mm² + 3 x 1.0 mm²	PUR / brass	160 AC/DC	-25...80	IP 67	–	–	40	**E11743**

	For industrial applications	Sockets	Cable plugs	Cables	Splitter boxes	For oils and coolants	For hygienic areas and viscous media	For hazardous areas
Complete ifm product range			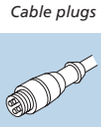	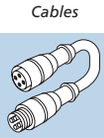	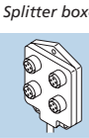			
Page		198 - 204	204 - 205	206 - 207	208 - 210	210 - 211	212 - 214	214 - 215

Type	Cable	Core specification	Material housing / nut	U [V]	T_a [°C]	Protection	Gold-contacts	LEDs	Drawing no.	Order no.
Group 27 · Socket , J-pole										
	15 m black PUR cable	16 x 0.5 mm² + 3 x 1.0 mm²	PUR / brass	160 AC/DC	-25...80	IP 67	–	–	40	**E11744**
	5 m black PUR cable	16 x 0.5 mm² + 3 x 1.0 mm²	PUR / brass	160 AC/DC	-25...80	IP 67	–	–	41	**E11745**
	10 m black PUR cable	16 x 0.5 mm² + 3 x 1.0 mm²	PUR / brass	160 AC/DC	-25...80	IP 67	–	–	41	**E11746**
	15 m black PUR cable	16 x 0.5 mm² + 3 x 1.0 mm²	PUR / brass	160 AC/DC	-25...80	IP 67	–	–	41	**E11747**
Group 28 · Socket 1/2", 2-pole + PE, 3-wire										
	2 m yellow PVC cable	3 x AWG22 Ø 5.2 mm	TPU / brass	250 AC 300 DC	-25...90	IP 67	–	–	42	**E10190**
	5 m yellow PVC cable	3 x 0.34 mm² Ø 5.2 mm	TPU / brass	250 AC 300 DC	-25...90	IP 67	–	–	42	**E10200**
	2 m yellow PVC cable	3 x AWG22 Ø 5.2 mm	TPU / brass	250 AC 300 DC	-25...90	IP 67	–	–	43	**E10189**
	5 m yellow PVC cable	3 x AWG22 Ø 5.2 mm	TPU / brass	250 AC 300 DC	-25...90	IP 67	–	–	43	**E10191**
Group 29 · Socket 1/2", 5-pole, 4-wire										
	5 m black PUR cable	4 x 0.34 mm² Ø 4.7 mm	TPU / brass	300 AC	-25...90	IP 67	–	–	44	**E11248**
	10 m black PUR cable	4 x 0.34 mm² Ø 4.7 mm	TPU / brass	300 AC	-25...90	IP 67	–	–	44	**E11249**
	5 m black PUR cable	4 x 0.34 mm² Ø 4.7 mm	TPU / brass	300 AC	-25...90	IP 67	–	–	45	**E11250**
	10 m black PUR cable	4 x 0.34 mm² Ø 4.7 mm	TPU / brass	300 AC	-25...90	IP 67	–	–	45	**E11251**
Group 30 · Socket 7/8", 2-pole + PE, 3-wire										
	2 m orange PVC cable	3 x 0.75 mm² Ø 5.2 mm	TPU	250 AC	-40...90	IP 68	–	–	46	**E20428**
Group 31 · Socket 7/8", 3-pole, 3-wire										
	2 m orange PVC cable	3 x 0.75 mm² Ø 5.2 mm	TPU	10...30 DC	-40...90	IP 68	–	–	46	**E20430**
Group 32 · Socket DIN A (DIN 43650)										
	wirable	...1.5 mm² (Ø 6...8 mm)	PA	... 250 AC ...300 DC	-40...125	IP 65	–	–	47	**E10058**

General information
List of articles
Level sensors
Flow sensors
Pressure sensors
Temperature sensors
Diagnostic systems
Evaluation systems, power supplies
Connection technology
Accessories
Technical information and customer service

	For industrial applications	Sockets	Cable plugs	Cables	Splitter boxes	For oils and coolants	For hygienic areas and viscous media	For hazardous areas
Complete ifm product range		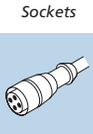		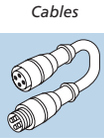	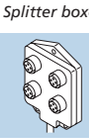			
Page		198 - 204	204 - 205	206 - 207	208 - 210	210 - 211	212 - 214	214 - 215

Type	Cable	Core specification	Material housing / nut	U [V]	T_a [°C]	Protection	Gold-contacts	LEDs	Drawing no.	Order no.
Group 33 · Socket Rd24, 6-pole + PE										
	wirable	...2.5 mm² (Ø 10...12 mm)	PBT	250 AC 300 DC	-40...100	IP 67	•	–	48	**E70142**
	wirable	...2.5 mm² (Ø 6...8 mm)	PBT / PA	250 AC 300 DC	-40...100	IP 67	•	–	49	**E11043**
Group 34 · Socket bayonet, for pressure sensors type PP....										
	2 m black PUR cable	4 x 0.5 mm²	Hytrel G-4774	9.6...30 DC	-40...85	IP 67 / IP 69K	–	–	50	**E11273**

	For industrial applications	Sockets	Cable plugs	Cables	Splitter boxes	For oils and coolants	For hygienic areas and viscous media	For hazardous areas
Complete ifm product range			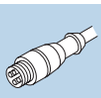	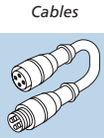	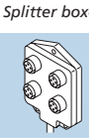			
Page		198 - 204	204 - 205	206 - 207	208 - 210	210 - 211	212 - 214	214 - 215

Type	Cable	Core specification	Material housing / nut	U [V]	T_a [°C]	Protection	Gold-contacts	LEDs	Drawing no.	Order no.
Group 35 · Plug M12, 2-pole + PE, 3-wire										
	0.6 m PUR cable	3 x 0.5 mm² Ø 4.8 mm	PUR / stainless steel (316S12)	24 AC/DC	-25...90	IP 67	–	–	51	**E10838**
Group 36 · Plug M12, 4-pole										
	wirable	...0.75 mm² (Ø 4...6 mm)	PA / brass	250 AC/DC	-25...100	IP 68	•	–	52	**E11504**
	wirable	...0.75 mm² (Ø 4...6 mm)	PA / brass	250 AC/DC	-25...100	IP 68	•	–	53	**E11505**
Group 37 · Plug M12, 5-pole										
	wirable	...0.75 mm² (Ø 4...6 mm)	PA / brass	125 AC/DC	-25...100	IP 68	•	–	54	**E11506**
	wirable	...0.75 mm² (Ø 4...6 mm)	PA / brass	125 AC/DC	-25...100	IP 68	•	–	55	**E11507**
Group 38 · Plug M23, 12-pole, numbering clockwise										
	soldering	...1 mm² Ø 6 mm	brass	4.5...30 DC	-40...125	IP 67	–	–	56	**E60123**
	soldering	...1 mm² Ø 4.5 mm	brass	4.5...30 DC	-40...125	IP 67	–	–	56	**E60128**

	For industrial applications	Sockets	Cable plugs	Cables	Splitter boxes	For oils and coolants	For hygienic areas and viscous media	For hazardous areas
Complete ifm product range		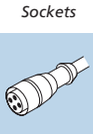		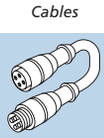	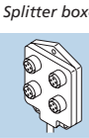			
Page		198 - 204	204 - 205	206 - 207	208 - 210	210 - 211	212 - 214	214 - 215

Type	Cable	Core specification	Material housing / nut	U [V]	T_a [°C]	Protection	Gold-contacts	LEDs	Drawing no.	Order no.
Group 39 · Jumper M8 plug, 4-pole / M8 socket, 3-pole										
	1 m black PUR cable	3 x 0.25 mm² Ø 4.1 mm	PUR / brass	60 AC 75 DC	-25...85	IP 68	•	–	57	**E11267**
	2 m black PUR cable	3 x 0.25 mm² Ø 4.1 mm	PUR / brass	60 AC 75 DC	-25...85	IP 68	•	–	57	**E11268**
Group 40 · Jumper M8 plug, 3-pole / M8 socket, 4-pole										
	1 m black PUR cable	3 x 0.25 mm² Ø 4.1 mm	PUR / brass	60 AC 75 DC	-25...85	IP 68	•	–	58	**E11202**
	2 m black PUR cable	3 x 0.25 mm² Ø 4.1 mm	PUR / brass	60 AC 75 DC	-25...85	IP 68	•	–	58	**E11203**
	1 m black PUR cable	3 x 0.25 mm² Ø 4.1 mm	PUR / brass	60 AC 75 DC	-25...85	IP 68	•	–	59	**E11204**
	2 m black PUR cable	3 x 0.25 mm² Ø 4.1 mm	PUR / brass	60 AC 75 DC	-25...85	IP 68	•	–	59	**E11205**
Group 41 · Jumper M8 plug, 4-pole / M8 socket, 4-pole										
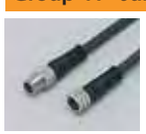	1 m black PUR cable	4 x 0.25 mm² Ø 4.4 mm	PUR / brass	60 AC 75 DC	-25...80	IP 68	•	–	60	**E11206**
	2 m black PUR cable	4 x 0.25 mm² Ø 4.4 mm	PUR / brass	60 AC 75 DC	-25...80	IP 68	•	–	60	**E11207**
	1 m black PUR cable	4 x 0.25 mm² Ø 4.4 mm	PUR / brass	60 AC 75 DC	-25...80	IP 68	•	–	61	**E11208**
	2 m black PUR cable	4 x 0.25 mm² Ø 4.4 mm	PUR / brass	60 AC 75 DC	-25...80	IP 68	•	–	61	**E11209**
Group 42 · Jumper M12 plug, 4-pole / M8 socket, 4-pole										
	1 m black PUR cable	4 x 0.25 mm² Ø 4.4 mm	PUR / brass	60 AC 75 DC	-25...85	IP 68	•	–	62	**E11210**
	2 m black PUR cable	4 x 0.25 mm² Ø 4.4 mm	PUR / brass	60 AC 75 DC	-25...85	IP 68	•	–	62	**E11211**
	1 m black PUR cable	4 x 0.25 mm² Ø 4.4 mm	PUR / brass	60 AC 75 DC	-25...85	IP 68	•	–	63	**E11212**
	2 m black PUR cable	4 x 0.25 mm² Ø 4.4 mm	PUR / brass	60 AC 75 DC	-25...85	IP 68	•	–	63	**E11213**
Group 43 · Jumper M12, 3-pole, 3-wire, LED										
	0.6 m black PUR cable	3 x 0.34 mm² Ø 4.9 mm	TPU / brass	10...36 DC	-25...90	IP 68 / IP 69K	•	green / yellow	64	**EVC051**
	1 m black PUR cable	3 x 0.34 mm² Ø 4.9 mm	TPU / brass	10...36 DC	-25...90	IP 68 / IP 69K	•	green / yellow	64	**EVC052**
	2 m black PUR cable	3 x 0.34 mm² Ø 4.9 mm	TPU / brass	10...36 DC	-25...90	IP 68 / IP 69K	•	green / yellow	64	**EVC053**
	5 m black PUR cable	3 x 0.34 mm² Ø 4.9 mm	TPU / brass	10...36 DC	-25...90	IP 68 / IP 69K	•	green / yellow	64	**EVC054**
Group 44 · Jumper M12, 4-pole, 4-wire										
	0.6 m black PUR cable	4 x 0.34 mm² Ø 4.9 mm	TPU / brass	250 AC 300 DC	-25...90	IP 68 / IP 69K	•	–	65	**EVC011**
	1 m black PUR cable	4 x 0.34 mm² Ø 4.9 mm	TPU / brass	250 AC 300 DC	-25...90	IP 68 / IP 69K	•	–	65	**EVC012**

	For industrial applications	Sockets	Cable plugs	Cables	Splitter boxes	For oils and coolants	For hygienic areas and viscous media	For hazardous areas
Complete ifm product range			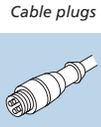	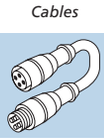	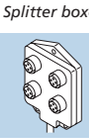			
Page		198 - 204	204 - 205	206 - 207	208 - 210	210 - 211	212 - 214	214 - 215



Type	Cable	Core specification	Material housing / nut	U [V]	T_a [°C]	Protection	Gold-contacts	LEDs	Drawing no.	Order no.
Group 44 · Jumper M12, 4-pole, 4-wire										
	2 m black PUR cable	4 x 0.34 mm² Ø 4.9 mm	TPU / brass	250 AC 300 DC	-25...90	IP 68 / IP 69K	•	–	65	**EVC013**
	5 m black PUR cable	4 x 0.34 mm² Ø 4.9 mm	TPU / brass	250 AC 300 DC	-25...90	IP 68 / IP 69K	•	–	65	**EVC014**
	0.6 m black PUR cable	4 x 0.34 mm² Ø 4.9 mm	TPU / brass	250 AC 300 DC	-25...90	IP 68 / IP 69K	•	–	66	**EVC031**
	1 m black PUR cable	4 x 0.34 mm² Ø 4.9 mm	TPU / brass	250 AC 300 DC	-25...90	IP 68 / IP 69K	•	–	66	**EVC032**
	2 m black PUR cable	4 x 0.34 mm² Ø 4.9 mm	TPU / brass	250 AC 300 DC	-25...90	IP 68 / IP 69K	•	–	66	**EVC033**
	5 m black PUR cable	4 x 0.34 mm² Ø 4.9 mm	TPU / brass	250 AC 300 DC	-25...90	IP 68 / IP 69K	•	–	66	**EVC034**
Group 45 · Jumper M12 / DIN A, 3/4-pole, 3-wire, LED										
	0.3 m black PUR cable	3 x 0.5 mm² Ø 5 mm	PUR / brass	24 AC/DC	-25...80	IP 67	–	yellow	67	**E11416**
	0.6 m black PUR cable	3 x 0.5 mm² Ø 5 mm	PUR / brass	24 AC/DC	-25...80	IP 67	–	yellow	67	**E11417**
Group 46 · Jumper M12 / DIN B, 3-pole, 3-wire, LED										
	0.3 m black PUR cable	3 x 0.5 mm² Ø 5 mm	PUR / brass	24 AC/DC	-25...80	IP 67	–	yellow	68	**E11421**
	0.6 m black PUR cable	3 x 0.5 mm² Ø 5 mm	PUR / brass	24 AC/DC	-25...80	IP 67	–	yellow	68	**E11422**
Group 47 · Jumper M12 / DIN C, 3/4-pole, 3-wire, LED										
	0.3 m black PUR cable	3 x 0.5 mm² Ø 5 mm	PUR / brass	24 AC/DC	-25...80	IP 65	–	yellow	69	**E11426**
	0.6 m black PUR cable	3 x 0.5 mm² Ø 5 mm	PUR / brass	24 AC/DC	-25...80	IP 65	–	yellow	69	**E11427**
Group 48 · Jumper M12 / Indu.Std. B, 3-pole, 3-wire, LED										
	0.3 m black PUR cable	3 x 0.5 mm² Ø 5 mm	PUR / brass	24 AC/DC	-25...80	IP 67	–	yellow	70	**E11431**
	0.6 m black PUR cable	3 x 0.5 mm² Ø 5 mm	PUR / brass	24 AC/DC	-25...80	IP 67	–	yellow	70	**E11432**
Group 49 · Jumper M12 plug, 4-pole / socket bayonet										
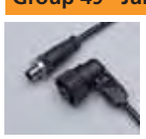	2 m black PUR cable	4 x 0.5 mm² Ø 6 mm	PA / stainless steel (320S31)	9.6...30 DC	-40...85	IP 67	–	–	71	**E11274**
Group 50 · Y-jumper M12 plug / 2 x valve plug type A (to DIN 43650)										
	1 m black PUR cable	3 x 0.5 mm² Ø 4.8 mm	TPU / brass	10...30 DC	-25...90	IP 67	–	2 x yellow	72	**E70203**

	For industrial applications	Sockets	Cable plugs	Cables	Splitter boxes	For oils and coolants	For hygienic areas and viscous media	For hazardous areas
Complete ifm product range		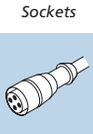		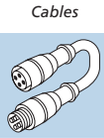	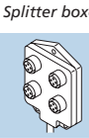			
Page	198 - 204	204 - 205	206 - 207	208 - 210	210 - 211	212 - 214	214 - 215	

Type	Cable	Core specification	Material housing / nut	U [V]	T_a [°C]	Protection	Gold-contacts	LEDs	Drawing no.	Order no.
Group 51 · Splitter box M8, 3-pole										
	5 m black PUR cable	8 x 0.34 mm² + 2 x 0.75 mm²	PBT-GF 20	10...30 DC	-25...90	IP 68	•	green / 8 x yel.	73	**E11214**
	10 m black PUR cable	8 x 0.34 mm² + 2 x 0.75 mm²	PBT-GF 20	10...30 DC	-25...90	IP 68	•	green / 8 x yel.	73	**E11215**
	M12 connector	–	PBT-GF 20	10...30 DC	-25...90	IP 68	•	green / 4 x yel.	74	**E11216**
Group 52 · Splitter box M8, 4-pole										
	5 m black PUR cable	16 x 0.34 mm² + 2 x 0.75 mm²	PBT-GF 20	10...30 DC	-25...90	IP 68	•	green / 16x yel.	75	**E11217**
	10 m black PUR cable	16 x 0.34 mm² + 2 x 0.75 mm²	PBT-GF 20	10...30 DC	-25...90	IP 68	•	green / 16x yel.	75	**E11218**
	M16 connector	–	PBT-GF 20	10...30 DC	-25...90	IP 68	•	green / 8 x yel.	76	**E11219**
Group 53 · M12 splitter box for 1 signal										
	5 m black PUR cable	4 x 0.25 mm² Ø 5 mm	TPU / brass	10...55 DC	-25...90	IP 67	•	–	77	**E10437**
	5 m black PUR cable	4 x 0.34 mm² + 3 x 0.75 mm²	TPU	60 AC 75 DC	-15...80	IP 67	•	–	78	**E11717**
	10 m black PUR cable	4 x 0.34 mm² + 3 x 0.75 mm²	TPU	60 AC 75 DC	-15...80	IP 67	•	–	78	**E11718**
	5 m black PUR cable	4 x 0.34 mm² + 3 x 0.75 mm²	TPU	10...30 DC	-15...80	IP 67	•	green / 4 x yel.	78	**E10278**
	10 m black PUR cable	4 x 0.34 mm² + 3 x 0.75 mm²	TPU	10...30 DC	-15...80	IP 67	•	green / 4 x yel.	78	**E10279**
	5 m black PUR cable	6 x 0.34 mm² + 3 x 0.75 mm²	TPU	60 AC 75 DC	-15...80	IP 67	•	–	79	**E11720**
	10 m black PUR cable	6 x 0.34 mm² + 3 x 0.75 mm²	TPU	60 AC 75 DC	-15...80	IP 67	•	–	79	**E11721**
	5 m black PUR cable	6 x 0.34 mm² + 3 x 0.75 mm²	TPU	10...30 DC	-15...80	IP 67	•	green / 6 x yel.	80	**E10280**
	10 m black PUR cable	6 x 0.34 mm² + 3 x 0.75 mm²	TPU	10...30 DC	-15...80	IP 67	•	green / 6 x yel.	80	**E10281**
	5 m black PUR cable	8 x 0.34 mm² + 3 x 0.75 mm²	TPU	60 AC 75 DC	-15...80	IP 67	•	–	81	**E11723**
	10 m black PUR cable	8 x 0.34 mm² + 3 x 0.75 mm²	TPU	60 AC 75 DC	-15...80	IP 67	•	–	81	**E11724**
	5 m black PUR cable	8 x 0.34 mm² + 3 x 0.75 mm²	TPU	10...30 DC	-15...80	IP 67	•	green / 8 x yel.	82	**E10282**
	10 m black PUR cable	8 x 0.34 mm² + 3 x 0.75 mm²	TPU	10...30 DC	-15...80	IP 67	•	green / 8 x yell.	82	**E10283**

Complete ifm product range

For industrial applications	Sockets	Cable plugs	Cables	Splitter boxes	For oils and coolants	For hygienic areas and viscous media	For hazardous areas
	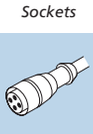		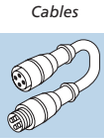	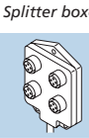			
Page	198 - 204	204 - 205	206 - 207	208 - 210	210 - 211	212 - 214	214 - 215

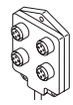

Type	Cable	Core specification	Material housing / nut	U [V]	T_a [°C]	Protection	Gold-contacts	LEDs	Drawing no.	Order no.
Group 53 · M12 splitter box for 1 signal										
	M23 connector	–	TPU	60 AC 75 DC	-15...80	IP 67	•	–	83	**E11719**
	M23 connector	–	TPU	10...30 DC	-15...80	IP 67	•	green / 4 x yel.	84	**E11735**
	M23 connector	–	TPU	60 AC 75 DC	-15...80	IP 67	•	–	85	**E11722**
	M23 connector	–	TPU	10...30 DC	-15...80	IP 67	•	green / 6 x yel.	86	**E10445**
	M23 connector	–	TPU	60 AC 75 DC	-15...80	IP 67	•	–	87	**E11725**
	M23 connector	–	TPU	10...30 DC	-15...80	IP 67	•	green / 8 x yel.	88	**E10446**
Group 54 · M12 splitter box for 2 signals										
	5 m black PUR cable	8 x 0.5 mm² + 3 x 1.0 mm²	TPU	60 AC 75 DC	-15...80	IP 67	•	–	89	**E11726**
	10 m black PUR cable	8 x 0.5 mm² + 3 x 1.0 mm²	TPU	60 AC 75 DC	-15...80	IP 67	•	–	89	**E11727**
	5 m black PUR cable	8 x 0.5 mm² + 3 x 1.0 mm²	TPU	10...30 DC	-15...80	IP 67	•	green / 8 x yel.	90	**E11017**
	10 m black PUR cable	8 x 0.5 mm² + 3 x 1.0 mm²	TPU	10...30 DC	-15...80	IP 67	•	green / 8 x yel.	90	**E11018**
	5 m black PUR cable	12 x 0.5 mm² + 3 x 1.0 mm²	TPU	60 AC 75 DC	-15...80	IP 67	•	–	91	**E11729**
	10 m black PUR cable	12 x 0.5 mm² + 3 x 1.0 mm²	TPU	60 AC 75 DC	-15...80	IP 67	•	–	91	**E11730**
	5 m black PUR cable	12 x 0.5 mm² + 3 x 1.0 mm²	TPU	10...30 DC	-15...80	IP 67	•	green / 12 x yel.	92	**E11019**
	10 m PUR cable	12 x 0.5 mm² + 3 x 1.0 mm²	TPU	10...30 DC	-15...80	IP 67	•	green / 12 x yel.	92	**E11020**
	5 m black PUR cable	16 x 0.5 mm² + 3 x 1.0 mm²	TPU	60 AC 75 DC	-15...80	IP 67	•	–	93	**E11732**
	10 m black PUR cable	16 x 0.5 mm² + 3 x 1.0 mm²	TPU	60 AC 75 DC	-15...80	IP 67	•	–	93	**E11733**
	5 m black PUR cable	16 x 0.5 mm² + 3 x 1.0 mm²	TPU	10...30 DC	-15...80	IP 67	•	green / 16 x yel.	94	**E11021**

General information
List of articles
Level sensors
Flow sensors
Pressure sensors
Temperature sensors
Diagnostic systems
Evaluation systems, power supplies
Connection technology
Accessories
Technical information and customer service

	For industrial applications	Sockets	Cable plugs	Cables	Splitter boxes	For oils and coolants	For hygienic areas and viscous media	For hazardous areas
Complete ifm product range				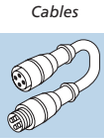	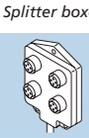			
Page		198 - 204	204 - 205	206 - 207	208 - 210	210 - 211	212 - 214	214 - 215

Type	Cable	Core specification	Material housing / nut	U [V]	T_a [°C]	Protection	Gold-contacts	LEDs	Drawing no.	Order no.
Group 54 · M12 splitter box for 2 signals										
	10 m PUR cable	16 x 0.5 mm^2 + 3 x 1.0 mm^2	TPU	10...30 DC	-15...80	IP 67	•	green / 16 x yel.	94	**E11022**
	M23 connector	–	TPU	60 AC 75 DC	-15...80	IP 67	•	–	95	**E11728**
	M23 connector	–	TPU	10...30 DC	-15...80	IP 67	•	green / 8 x yel.	96	**E10945**
	M23 connector	–	TPU	60 AC 75 DC	-15...80	IP 67	•	–	97	**E11731**
	M23 connector	–	TPU	10...30 DC	-15...80	IP 67	•	green / 12 x yel.	98	**E10946**
	M23 connector	–	TPU	60 AC 75 DC	-15...80	IP 67	•	–	99	**E11734**
	M23 connector	–	TPU	10...30 DC	-15...80	IP 67	•	green / 16 x yel.	100	**E10659**

Complete ifm product range

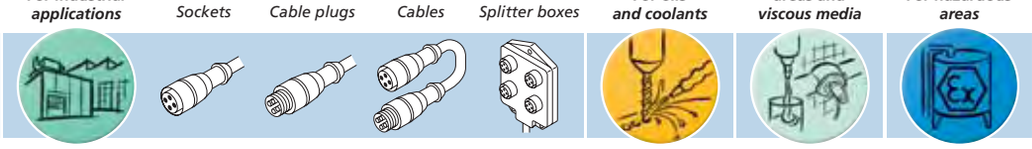

Page 198 - 204 | 204 - 205 | 206 - 207 | 208 - 210 | 210 - 211 | 212 - 214 | 214 - 215

Type	Cable	Core specification	Material housing / nut	U [V]	T_a [°C]	Protection	Gold-contacts	LEDs	Drawing no.	Order no.
Group 55 · Socket M12, 4-pole, 4-wire										
	2 m black PUR cable	4 x 0.34 mm² Ø 4.9 mm	TPU / brass	250 AC 300 DC	-25...90	IP 68 / IP 69K	•	–	10	**EVC004**
	5 m black PUR cable	4 x 0.34 mm² Ø 4.9 mm	TPU / brass	250 AC 300 DC	-25...90	IP 68 / IP 69K	•	–	10	**EVC005**
	10 m black PUR cable	4 x 0.34 mm² Ø 4.9 mm	TPU / brass	250 AC 300 DC	-25...90	IP 68 / IP 69K	•	–	10	**EVC006**
	2 m black PUR cable	4 x 0.34 mm² Ø 4.9 mm	TPU / brass	250 AC 300 DC	-25...90	IP 68 / IP 69K	•	–	11	**EVC001**
	5 m black PUR cable	4 x 0.34 mm² Ø 4.9 mm	TPU / brass	250 AC 300 DC	-25...90	IP 68 / IP 69K	•	–	11	**EVC002**
	10 m black PUR cable	4 x 0.34 mm² Ø 4.9 mm	TPU / brass	250 AC 300 DC	-25...90	IP 68 / IP 69K	•	–	11	**EVC003**
Group 56 · Socket M12, 4-pole, 4-wire, LED, PNP										
	2 m black PUR cable	4 x 0.34 mm² Ø 4.9 mm	TPU / brass	10...36 DC	-25...90	IP 68 / IP 69K	•	green / 2 x yel.	15	**EVC007**
	5 m black PUR cable	4 x 0.34 mm² Ø 4.9 mm	TPU / brass	10...36 DC	-25...90	IP 68 / IP 69K	•	green / 2 x yel.	15	**EVC008**
	10 m black PUR cable	4 x 0.34 mm² Ø 4.9 mm	TPU / brass	10...36 DC	-25...90	IP 68 / IP 69K	•	green / 2 x yel.	15	**EVC009**

	For industrial applications	Sockets	Cable plugs	Cables	Splitter boxes	For oils and coolants	For hygienic areas and viscous media	For hazardous areas
Complete ifm product range				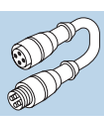	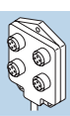			
Page		198 - 204	204 - 205	206 - 207	208 - 210	210 - 211	212 - 214	214 - 215

Type	Cable	Core specification	Material housing / nut	U [V]	T_a [°C]	Protection	Gold-contacts	LEDs	Drawing no.	Order no.
Group 57 · Socket M8, 4-pole, 4-wire										
	5 m orange PVC cable	4 x 0.25 mm² Ø 5 mm	PVC / stainless steel (316S12)	60 AC 75 DC	-25...90	IP 68	–	–	101	**E11220**
	10 m orange PVC cable	4 x 0.25 mm² Ø 5 mm	PVC / stainless steel (316S12)	60 AC 75 DC	-25...90	IP 68	–	–	101	**E11221**
	25 m orange PVC cable	4 x 0.25 mm² Ø 5 mm	PVC / stainless steel (316S12)	60 AC 75 DC	-25...90	IP 68	–	–	101	**E11222**
	5 m orange PVC cable	4 x 0.25 mm² Ø 5 mm	PVC / stainless steel (316S12)	60 AC 75 DC	-25...90	IP 68	–	–	102	**E11223**
	10 m orange PVC cable	4 x 0.25 mm² Ø 5 mm	PVC / stainless steel (316S12)	60 AC 75 DC	-25...90	IP 68	–	–	102	**E11224**
	25 m orange PVC cable	4 x 0.25 mm² Ø 5 mm	PVC / stainless steel (316S12)	60 AC 75 DC	-25...90	IP 68	–	–	102	**E11225**
Group 58 · Socket M12, 4-pole										
	5 m orange PVC cable	4 x 0.34 mm² Ø 4.9 mm	PVC / stainless steel (316S12)	250 AC 300 DC	-25...100	IP 68 / IP 69K	•	–	103	**EVT004**
	10 m orange PVC cable	4 x 0.34 mm² Ø 4.9 mm	PVC / stainless steel (316S12)	250 AC 300 DC	-25...100	IP 68 / IP 69K	•	–	103	**EVT005**
	25 m orange PVC cable	4 x 0.34 mm² Ø 4.9 mm	PVC / stainless steel (316S12)	250 AC 300 DC	-25...100	IP 68 / IP 69K	•	–	103	**EVT006**
	5 m orange PVC cable	4 x 0.34 mm² Ø 4.9 mm	PVC / stainless steel (316S12)	250 AC 300 DC	-25...100	IP 68 / IP 69K	•	–	104	**EVT001**
	10 m orange PVC cable	4 x 0.34 mm² Ø 4.9 mm	PVC / stainless steel (316S12)	250 AC 300 DC	-25...100	IP 68 / IP 69K	•	–	104	**EVT002**
	25 m orange PVC cable	4 x 0.34 mm² Ø 4.9 mm	PVC / stainless steel (316S12)	250 AC 300 DC	-25...100	IP 68 / IP 69K	•	–	104	**EVT003**
	wirable	...0.75 mm² (Ø 4...8 mm)	PBT / stainless steel	240 AC/DC	-25...90	IP 67 / IP 69K	•	–	105	**E11862**
	wirable	...0.75 mm² (Ø 4...8 mm)	PBT / stainless steel	240 AC/DC	-25...90	IP 67 / IP 69K	•	–	106	**E11861**
	5 m orange PVC cable	4 x 0.34 mm² Ø 4.9 mm	PVC / stainless steel (316S12)	10...36 DC	-25...100	IP 68 / IP 69K	•	green / 2 x yel.	107	**EVT007**
	10 m orange PVC cable	4 x 0.34 mm² Ø 4.9 mm	PVC / stainless steel (316S12)	10...36 DC	-25...100	IP 68 / IP 69K	•	green / 2 x yel.	107	**EVT008**
	25 m orange PVC cable	4 x 0.34 mm² Ø 4.9 mm	PVC / stainless steel (316S12)	10...36 DC	-25...100	IP 68 / IP 69K	•	green / 2 x yel.	107	**EVT009**

Complete ifm product range

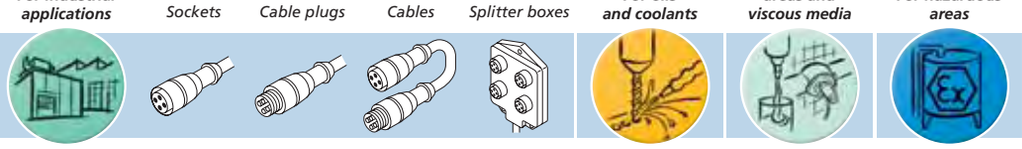

Page 198 - 204 | 204 - 205 | 206 - 207 | 208 - 210 | 210 - 211 | 212 - 214 | 214 - 215

Type	Cable	Core specification	Material housing / nut	U [V]	T_a [°C]	Protection	Gold-contacts	LEDs	Drawing no.	Order no.
Group 59 · Socket M12, 4-pole, LED, PNP										
	wirable	...0.75 mm² (Ø 4...8 mm)	PBT / stainless steel	10...30 DC	-25...90	IP 67 / IP 69K	•	green / yellow	105	**E11863**
	5 m orange PVC cable	5 x 0.25 mm² Ø 4.9 mm	PVC / stainless steel (316S12)	30 AC 36 DC	-25...100	IP 68 / IP 69K	•	–	108	**EVT013**
	10 m orange PVC cable	5 x 0.25 mm² Ø 4.9 mm	PVC / stainless steel (316S12)	30 AC 36 DC	-25...100	IP 68 / IP 69K	•	–	108	**EVT014**
	25 m orange PVC cable	5 x 0.25 mm² Ø 4.9 mm	PVC / stainless steel (316S12)	30 AC 36 DC	-25...100	IP 68 / IP 69K	•	–	108	**EVT015**
	5 m orange PVC cable	5 x 0.25 mm² Ø 4.9 mm	PVC / stainless steel (316S12)	30 AC 36 DC	-25...100	IP 68 / IP 69K	•	–	109	**EVT010**
	10 m orange PVC cable	5 x 0.25 mm² Ø 4.9 mm	PVC / stainless steel (316S12)	30 AC 36 DC	-25...100	IP 68 / IP 69K	•	–	109	**EVT011**
	25 m orange PVC cable	5 x 0.25 mm² Ø 4.9 mm	PVC / stainless steel (316S12)	30 AC 36 DC	-25...100	IP 68 / IP 69K	•	–	109	**EVT012**
Group 60 · Plug M12, 4-pole										
	wirable	...0.75 mm² (Ø 4...8 mm)	PBT / stainless steel	240 AC/DC	-25...90	IP 67 / IP 69K	•	–	110	**E11858**
	wirable	...0.75 mm² (Ø 4...8 mm)	PBT / stainless steel	240 AC/DC	-25...90	IP 67 / IP 69K	•	–	111	**E11857**
	1 m orange PVC cable	4 x 0.34 mm² Ø 4.9 mm	PVC / stainless steel (316S12)	250 AC 300 DC	-25...100	IP 68 / IP 69K	•	–	112	**EVT042**
	2 m orange PVC cable	4 x 0.34 mm² Ø 4.9 mm	PVC / stainless steel (316S12)	250 AC 300 DC	-25...100	IP 68 / IP 69K	•	–	112	**EVT043**
	5 m orange PVC cable	4 x 0.34 mm² Ø 4.9 mm	PVC / stainless steel (316S12)	250 AC 300 DC	-25...100	IP 68 / IP 69K	•	–	112	**EVT044**
	10 m orange PVC cable	4 x 0.34 mm² Ø 4.9 mm	PVC / stainless steel (316S12)	250 AC 300 DC	-25...100	IP 68 / IP 69K	•	–	112	**EVT045**
Group 61 · jumper M12 plug, 4-pole / M12 socket, 4-pole, 4-wire										
	10 m orange PVC cable	4 x 0.34 mm² Ø 5.3 mm	PVC / stainless steel (316S12)	250 AC 300 DC	-25...100	IP 67 / IP 69K	•	–	113	**E70189**
Group 62 · Socket M12, 5-pole										
	wirable	...0.75 mm² (Ø 4...8 mm)	PBT / stainless steel	60 AC/DC	-25...90	IP 67 / IP 69K	•	–	114	**E11865**

General information
List of articles
Level sensors
Flow sensors
Pressure sensors
Temperature sensors
Diagnostic systems
Evaluation systems, power supplies
Connection technology
Accessories
Technical information and customer service

	For industrial applications	Sockets	Cable plugs	Cables	Splitter boxes	For oils and coolants	For hygienic areas and viscous media	For hazardous areas
Complete ifm product range		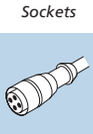		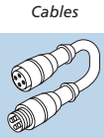	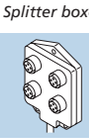			
Page		198 - 204	204 - 205	206 - 207	208 - 210	210 - 211	212 - 214	214 - 215

Type	Cable	Core specification	Material housing / nut	U [V]	T_a [°C]	Protection	Gold-contacts	LEDs	Drawing no.	Order no.
Group 62 · Socket M12, 5-pole										
	wirable	...0.75 mm² (Ø 4...8 mm)	PBT / stainless steel	60 AC/DC	-25...90	IP 67 / IP 69K	•	–	115	**E11864**
Group 63 · Plug M12, 5-pole										
	wirable	...0.75 mm² (Ø 4...8 mm)	PBT / stainless steel	60 AC/DC	-25...90	IP 67 / IP 69K	•	–	116	**E11860**
	wirable	...0.75 mm² (Ø 4...8 mm)	PBT / stainless steel	60 AC/DC	-25...90	IP 67 / IP 69K	•	–	117	**E11859**
	0.6 m orange PVC cable	5 x 0.25 mm² Ø 5.3 mm	PVC / st. steel (316S12)	30 AC 36 DC	-25...100	IP 68 / IP 69K	•	–	118	**E11641**
	1 m orange PVC cable	5 x 0.25 mm² Ø 5.3 mm	PVC / st. steel (316S12)	30 AC 36 DC	-25...100	IP 68 / IP 69K	•	–	118	**E11642**
	2 m orange PVC cable	5 x 0.25 mm² Ø 5.3 mm	PVC / st. steel (316S12)	30 AC 36 DC	-25...100	IP 68 / IP 69K	•	–	118	**E11643**
	5 m orange PVC cable	5 x 0.25 mm² Ø 5.3 mm	PVC / st. steel (316S12)	30 AC 36 DC	-25...100	IP 68 / IP 69K	•	–	118	**E11644**
Group 64 · Splitter box M12										
	10 m black PUR / PVC cable	3 x 0.75 mm² + 16 x 0.34 mm²	high-grade stainless steel	10...36 DC	-5...70	IP 69K	–	green / 16 x yel.	119	**E11775**

	For industrial applications	Sockets	Cable plugs	Cables	Splitter boxes	For oils and coolants	For hygienic areas and viscous media	For hazardous areas
Complete ifm product range				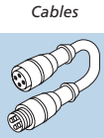	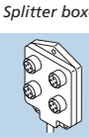			
Page	198 - 204	204 - 205	206 - 207	208 - 210	210 - 211	212 - 214	214 - 215	

Type	Cable	Core specification	Material housing / nut	U [V]	T_a [°C]	Protection	Gold-contacts	LEDs	Drawing no.	Order no.
Group 65 · Socket M12, 4-pole, 4-wire										
	2 m blue PUR / PVC cable	4 x 0.34 mm² Ø 5 mm	TPU / brass	...15 DC	-25...90	IP 67	–	–	120	**E10355**
	5 m blue PUR / PVC cable	4 x 0.34 mm² Ø 5 mm	TPU / brass	...15 DC	-25...90	IP 67	–	–	120	**E10356**
	2 m blue PUR / PVC cable	4 x 0.34 mm² Ø 5 mm	TPU / brass	...15 DC	-25...90	IP 67	–	–	121	**E10357**
	5 m blue PUR / PVC cable	4 x 0.34 mm² Ø 5 mm	TPU / brass	...15 DC	-25...90	IP 67	–	–	121	**E10358**
Group 66 · Socket M12, 5-pole, 5-wire										
	2 m blue PUR / PVC cable	5 x 0.34 mm² Ø 5 mm	TPU / brass	...15 DC	-25...90	IP 67	–	–	8	**E11693**
	5 m blue PUR / PVC cable	5 x 0.34 mm² Ø 5 mm	TPU / brass	...15 DC	-25...90	IP 67	–	–	8	**E11694**
Group 67 · Socket M12, 5-pole, 5-wire										
	2 m blue PUR / PVC cable	5 x 0.34 mm² Ø 6 mm	TPU / brass	10...30 DC	-25...90	IP 67	–	–	8	**E40075**
	5 m blue PUR / PVC cable	5 x 0.34 mm² Ø 6 mm	TPU / brass	10...30 DC	-25...90	IP 67	–	–	8	**E40076**
Group 68 · Plug M12, 5-pole, 2-wire										
	0.6 m blue PVC cable	2 x 0.5 mm² Ø 5.5 mm	TPU / stainless steel (316S12)	...15 DC	-25...90	IP 67	–	–	122	**E10853**
Group 69 · Jumper M12 plug / valve plug type A (to DIN 43650)										
	0.3 m blue PVC cable	2 x 0.5 mm² Ø 5 mm	TPU / stainless steel (316S12)	...15 DC	-25...90	IP 67	–	–	123	**E10821**
	0.6 m blue PVC cable	2 x 0.5 mm² Ø 5 mm	TPU / stainless steel (316S12)	...15 DC	-25...90	IP 67	–	–	123	**E10822**
Group 70 · Jumper M12 plug / valve plug type B (to DIN 43650)										
	0.3 m blue PVC cable	2 x 0.5 mm² Ø 5 mm	TPU / stainless steel (316S12)	...15 DC	-25...90	IP 67	–	–	124	**E10823**
Group 71 · Jumper M12 plug / valve plug type C (to DIN 43650)										
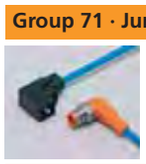	0.3 m blue PVC cable	2 x 0.5 mm² Ø 5 mm	TPU / stainless steel (316S12)	...15 DC	-25...90	IP 67	–	–	125	**E10846**
	0.6 m blue PUR / PVC cable	2 x 0.5 mm² Ø 5 mm	TPU / stainless steel (316S12)	...15 DC	-25...90	IP 67	–	–	125	**E10847**
Group 72 · Jumper M12 plug / valve plug type B (industrial standard)										
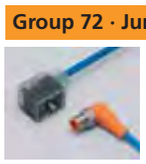	0.3 m blue PVC cable	2 x 0.5 mm² Ø 5 mm	TPU / stainless steel (316S12)	...15 DC	-25...90	IP 67	–	–	126	**E10825**
	0.6 m blue PVC cable	2 x 0.5 mm² Ø 5 mm	TPU / stainless steel (316S12)	...15 DC	-25...90	IP 67	–	–	126	**E10826**

General information
List of articles
Level sensors
Flow sensors
Pressure sensors
Temperature sensors
Diagnostic systems
Evaluation systems, power supplies
Connection technology
Accessories
Technical information and customer service

	For industrial applications	Sockets	Cable plugs	Cables	Splitter boxes	For oils and coolants	For hygienic areas and viscous media	For hazardous areas
Complete ifm product range			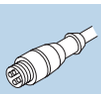	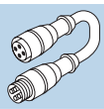	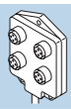			
Page		198 - 204	204 - 205	206 - 207	208 - 210	210 - 211	212 - 214	214 - 215



Accessories

Accessories fluid sensors and diagnostic systems

Level sensors	218 - 219
Flow sensors	219 - 221
Pressure	222 - 224
Temperature sensors	224 - 228
Diagnostic systems	228
Evaluation systems, power supplies	228



Type	Description	Order no.
Level sensors		
	Mounting clamp, Ø 16 mm	**E43000**
	Mounting set Ø 16 mm for capacitive level sensors LK, LI, LT, LL	**E43016**
	Flange plate 73-90 D16 for capacitive level sensors LK, LI, LT, LL	**E43001**
	Flange plate 100-125 D16 for capacitive level sensors LK, LI, LT, LL	**E43005**
	Flange plate 65-80 D16 for capacitive level sensors LK, LI, LT, LL	**E43006**
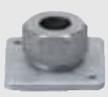	Flange plate 54-52X52 D16 for capacitive level sensors LK, LI, LT, LL	**E43007**
	Flange plate 73-90 / G 3/4 for level sensors LR	**E43201**
	Flange plate 73-90 / 3/4" NPT for level sensors LR	**E43206**
	Flange plate 65-80 / G 3/4 for level sensors LR	**E43202**
	Welding adapter Ø 50 D16 for capacitive level sensors LK, LI, LT, LL	**E43002**

Type	Description	Order no.
Level sensors		
	Mounting adapter G 3/4 D16 for capacitive level sensors LK, LI, LT, LL	**E43003**
	Mounting adapter G 1 D16 for capacitive level sensors LK, LI, LT, LL	**E43004**
	Mounting adapter, G 3/4 D22	**E43008**
	Mounting adapter, G 1 D22	**E43009**
	Mounting adapter 3/4" NPT D16 for capacitive level sensors LK, LI, LT, LL	**E43012**
	Mounting adapter 1" NPT D16 for capacitive level sensors LK, LI, LT, LL	**E43013**
	Mounting adapter, 3/4" NPT D22	**E43014**
	Mounting adapter, 1" NPT D22	**E43015**
	Mounting adapter G 3/4 D16 for capacitive level sensors LI	**E43019**
	Climatic tube, 264 mm	**E43100**

Visit our website: www.ifm-electronic.com

Type	Description	Order no.
Level sensors		
	Climatic tube, 472 mm	**E43101**
	Climatic tube, 728 mm	**E43102**
	Climatic tube, 132 mm	**E43103**
	Probe for level sensors LR	**E43203**
	Probe for level sensors LR	**E43204**
	Probe for level sensors LR	**E43205**
	Protective cover for LK / LL / LR / LT sensors	**E43910**
Flow sensors		
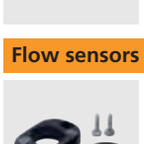	Mounting clamp Ø 23 mm for air flow monitor SLG	**E40048**
	Progressive ring T-piece DIN 2353, QL 18-18-18	**E40078**
	Progressive ring T-piece DIN 2353, QL 22-18-22	**E40079**

Type	Description	Order no.
Flow sensors		
	Progressive ring T-piece DIN 2353, QL 28-18-28	**E40080**
	Progressive ring T-piece DIN 2353, QL 18-18-18	**E40081**
	Progressive ring T-piece DIN 2353, QL 22-18-22	**E40082**
	Progressive ring T-piece DIN 2353, QL 28-18-28	**E40083**
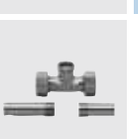	Progressive ring T-piece DIN 2353, QL 18-18-18/G 1/2	**E40102**
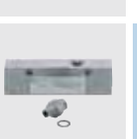	Adapter block D10 / G 1/4 for flow sensors type SID, SF5	**E40161**
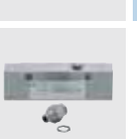	Adapter block D15 / G 1/2 for flow sensors type SID, SF5	**E40162**
	Adapter block D22 / G 3/4 for flow sensors type SID, SF5	**E40163**
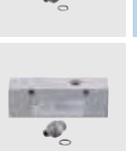	Adapter block D27 / G 1 for flow sensors type SID, SF5	**E40164**
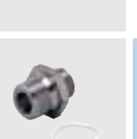	Adapter, M18 x 1.5 - G 1/2	**E40114**

Visit our website: www.ifm-electronic.com

Type	Description	Order no.
Flow sensors		
	Adapter, M18 x 1.5 - G 1/4	**E40115**
	Adapter, M18 x 1.5 - M12 x 1	**E40128**
	Adapter M18 x 1.5 - L18 for mounting in T-pieces	**E40104**
	Adapter, M18 x 1.5 - M12 x 1	**E40101**
	Adapter, M18 x 1.5 - M12 x 1	**E40100**
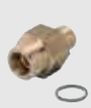	Adapter, M18 x 1.5 - G 1/4	**E40099**
	Adapter, M18 x 1.5 - G 1/4	**E40098**
	Adapter, M18 x 1.5 - G 1/2	**E40096**
	Adapter, M18 x 1.5 - G 1/2	**E40097**
	Adapter G 3/4 I - R1/2 for flow monitor type SU7	**E40151**

Type	Description	Order no.
Flow sensors		
	Adapter G 1 - R1/2 for flow monitor type SU8	**E40152**
	Adapter G 1 - R3/4 for flow monitor type SU8	**E40153**
	Aseptoflex adapter, DIN 11864-1A DN50	**E33103**
	Welding adapter, Ø 50 mm	**E30052**
	Aseptoflex adapter, Quick Connect DN40	**E33100**
	Aseptoflex adapter, DIN11851 - 1.25" / DN32	**E33011**
	Aseptoflex adapter, SMS 2" GWD	**E33072**
	Aseptoflex adapter, IDF 2"	**E33082**
	Aseptoflex adapter, RJT 2"	**E33092**
	Aseptoflex adapter, APV	**E33025**

Visit our website: www.ifm-electronic.com

Type	Description	Order no.
Flow sensors		
	Aseptoflex adapter, SMS 2" / DN 50	**E33032**
	Aseptoflex adapter, SMS 2.5" / DN 65	**E33033**
	Aseptoflex adapter with clamping flange, Brewery D48	**E33043**
	Aseptoflex adapter, SMS 1.5" GWD	**E33071**
	Aseptoflex adapter, DIN11851 - 1.5" / DN40	**E33012**
	Aseptoflex adapter, DIN11851 - 2" / DN50	**E33013**
	Aseptoflex adapter, DIN11851 - 2.5" / DN65	**E33014**
	Aseptoflex adapter, DIN11851 - 3" / DN80	**E33015**
	Aseptoflex adapter, Clamp 1.5"	**E33001**
	Aseptoflex adapter, SMS 1.5" / DN 40	**E33031**

Type	Description	Order no.
Flow sensors		
	Aseptoflex adapter, Varivent D50	**E33021**
	Aseptoflex adapter, Varivent D68	**E33022**
	Aseptoflex adapter with clamping flange, DRD D65	**E33042**
	Aseptoflex adapter, Suedmo DN25	**E33051**
	Aseptoflex adapter Suedmo DN25 with O-ring	**E33061**
	Welding adapter, M18 x 1.5 - Ø 23 mm	**E40138**
	Welding adapter, M18 x 1.5 - Ø 24 mm	**E40124**
	Flow adapter (for low flow rates), M12 x 1 - G 1/8	**E40129**
	Flow adapter (for low flow rates), M12 x 1 - G 1/8	**E40130**
	Flow adapter (for low flow rates), G * - G 1/8	**E40057**

Visit our website: www.ifm-electronic.com

Type	Description	Order no.
Pressure sensors		
	Mounting clamp, Ø 34 mm	**E10017**
	Mounting clamp, Ø 34 mm	**E10193**
	Mounting device 2 way	**E30078**
	Mounting device 3 way	**E30079**
	Flange adapter, G 1/4	**E30004**
	Flange adapter, G 1/4	**E30003**
	Adapter, G 1/4 - G 1/2	**E30000**
	Adapter, G 1/4 - G 1/4	**E30007**
	Adapter, G 1/4 - M20 x 1.5	**E30010**
	Adapter, G 1/4 - G 1/2	**E30050**

Type	Description	Order no.
Pressure sensors		
	Adapter, 1/4" NPT - G 1/4	**E30058**
	Adapter, 1/4" NPT - G 1/2	**E30059**
	Adapter G 1/4 - DN16 G1/4 small flange DIN 28403 DN16	**E30065**
	Adapter, G 1 - Varivent D68	**E33622**
	Adapter, G 3/4 - Varivent D68	**E33922**
	Adapter, G 3/4 - DIN11851/1.5" / DN 40	**E33912**
	Adapter, G 3/4 - DIN11851/1" / DN 25	**E33910**
	Adapter, G 3/4 - Clamp 2"	**E33902**
	Adapter, G 3/4 - Clamp 1.5"	**E33901**
	Adapter, G 1 - DIN11851/1.5" / DN 40	**E33612**

Visit our website: www.ifm-electronic.com

Type	Description	Order no.
Pressure sensors		
	Adapter, G 1 - Clamp ISO2852/1-1.5	**E33601**
	Aseptoflex adapter, APV	**E33025**
	Aseptoflex adapter, SMS 2" / DN 50	**E33032**
	Aseptoflex adapter, SMS 2.5" / DN 65	**E33033**
	Aseptoflex adapter with clamping flange, Brewery D48	**E33043**
	Aseptoflex adapter, SMS 1.5" GWD	**E33071**
	Aseptoflex adapter, DIN11851 - 1.5" / DN40	**E33012**
	Aseptoflex adapter, DIN11851 - 2" / DN50	**E33013**
	Aseptoflex adapter, DIN11851 - 2.5" / DN65	**E33014**
	Aseptoflex adapter, DIN11851 - 3" / DN80	**E33015**

Type	Description	Order no.
Pressure sensors		
	Aseptoflex adapter, Clamp 1.5"	**E33001**
	Aseptoflex adapter, SMS 1.5" / DN 40	**E33031**
	Aseptoflex adapter, Varivent D50	**E33021**
	Aseptoflex adapter, Varivent D68	**E33022**
	Aseptoflex adapter with clamping flange, DRD D65	**E33042**
	Aseptoflex adapter, Suedmo DN25	**E33051**
	Aseptoflex adapter Suedmo DN25 with O-ring	**E33061**
	Welding adapter, G 3/4 - Ø 50 mm	**E30009**
	Welding adapter, G 1 - Ø 50 mm	**E30013**
	Welding adapter, G 1 - Ø 50 mm	**E30072**

Visit our website: www.ifm-electronic.com

Type	Description	Order no.
Pressure sensors		
	Adapter plug for welding adapter with Aseptoflex thread For order No. E30052	**E30064**
	Adapter plug, G 1	**E30070**
	Adapter plug, G 3/4	**E30071**
	Protective cover For order No. PP2000, PB5020, PB5021, PB5022, PB5023, PB5024, PB5026, PB5027	**E30006**
	Teach button for EPS sensors	**E30051**
	Protective cover, O-ring: EPDM	**E30104**
	Protective cover, O-ring: Viton	**E30101**
Temperature sensors		
	Mounting clamp, Ø 34 mm	**E10017**
	Mounting clamp, Ø 34 mm	**E10193**
	Mounting device 2 way	**E30078**

Type	Description	Order no.
Temperature sensors		
	Mounting device 3 way	**E30079**
	Thread cover for types TA	**E30090**
	Thread cover for types TR	**E30091**
	Mounting set for direct connection of temperature sensors TT to control monitors TR	**E30017**
	Mounting set, G 1/2	**E30089**
	Clamp fitting Ø 6/8/10 mm - G 1/2 for temperature sensors TS / TT	**E30018**
	Clamp fitting Ø 6/8/10 mm - 1/2" NPT for temperature sensors TS / TT	**E30025**
	Clamp adapter Ø 10 mm for temperature sensors Ø 10 mm	**E34110**
	Clamp adapter, Ø 10 mm - G 1/2	**E34410**
	Mounting adapter, M18 x 1.5 - Ø 23 mm	**E40148**

Visit our website: www.ifm-electronic.com

Type	Description	Order no.
Temperature sensors		
	Adapter, G 1/4 - G 1/4	**E30107**
	Adapter, M18 x 1.5 - G 1/2	**E30073**
	Welding adapter, M18 x 1.5 - Ø 24 mm	**E40124**
	Welding adapter G 1/2 - Ø 35 mm ball	**E30055**
	Welding adapter G 1/2 - Ø 45 mm collar	**E30056**
	Welding adapter Ø 24.7 mm ball for temperature sensors Ø 6 mm	**E30108**
	Welding adapter Ø 24.8 mm collar for temperature sensors Ø 6 mm	**E30109**
	Welding adapter, Ø 50 mm	**E30052**
	Welding thermowell, Ø 10 mm	**E35220**
	Progressive ring fitting for temperature sensors, Ø 10 mm - G 1/2	**E30016**

Type	Description	Order no.
Temperature sensors		
	Progressive ring fitting for temperature sensors, Ø 10 mm - 1/2" NPT	**E30024**
	Progressive ring fitting for temperature sensors, Ø 8 mm - G 1/2	**E30046**
	Progressive ring fitting for temperature sensors, Ø 6 mm - G 1/2	**E30047**
	Progressive ring fitting for temperature sensors, Ø 6 mm - 1/4" NPT	**E30049**
	Progressive ring fitting for temperature sensors, Ø 8 mm - G 1/4	**E30061**
	Hygienic thermowell Ø 10 mm for temperature sensors Ø 10 mm	**E34005**
	Thermowell for temperature sensors for types TA	**E30393**
	Thermowell for temperature sensors Ø 10 mm for temperature sensors Ø 10 mm	**E34010**
	Thermowell for temperature sensors, Ø 10 mm - G 1/2	**E35010**
	Thermowell for temperature sensors, Ø 10 mm - G 1/2	**E35020**

Visit our website: www.ifm-electronic.com

Type	Description	Order no.
Temperature sensors		
	Thermowell for temperature sensors, Ø 10 mm - G 1/2	**E35030**
	Thermowell for temperature sensors, Ø 10 mm - G 1/2	**E35050**
	Thermowell for temperature sensors, Ø 10 mm - 1/2" NPT	**E35110**
	Thermowell for temperature sensors, Ø 10 mm - 1/2" NPT	**E35120**
	Thermowell for temperature sensors, Ø 8 mm - G 1/2	**E36010**
	Thermowell for temperature sensors, Ø 8 mm - G 1/2	**E36020**
	Thermowell for temperature sensors, Ø 8 mm - G 1/2	**E36030**
	Thermowell for temperature sensors, Ø 6 mm - G 1/2	**E37010**
	Thermowell for temperature sensors, Ø 6 mm - G 1/2	**E37020**
	Thermowell for temperature sensors, Ø 6 mm - G 1/2	**E37030**

Type	Description	Order no.
Temperature sensors		
	Adapter, M18 x 1.5 - G 1/2	**E40114**
	Adapter, M18 x 1.5 - M12 x 1	**E40128**
	Adapter M18 x 1.5 - L18 for mounting in T-pieces	**E40104**
	Adapter, M18 x 1.5 - M12 x 1	**E40101**
	Adapter, M18 x 1.5 - M12 x 1	**E40100**
	Adapter, M18 x 1.5 - G 1/4	**E40099**
	Adapter, M18 x 1.5 - G 1/4	**E40098**
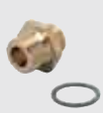	Adapter, M18 x 1.5 - G 1/2	**E40096**
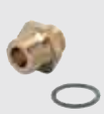	Adapter, M18 x 1.5 - G 1/2	**E40097**
	Adapter, M18 x 1.5 - 1/2" NPT	**E40107**

Visit our website: www.ifm-electronic.com

Type	Description	Order no.
Temperature sensors		
	Adapter, M18 x 1.5 - G 1/2	**E30073**
	Adapter, G 1/2 - Clamp 1" / 1.5"	**E33401**
	Adapter, G 1/2 - Clamp 2"	**E33402**
	Adapter, G 1/2 - SMS DN25	**E33430**
	Aseptoflex adapter, DIN 11864-1A DN50	**E33103**
	Aseptoflex adapter, DIN11851 - 1.25" / DN32	**E33011**
	Aseptoflex adapter, SMS 2" GWD	**E33072**
	Aseptoflex adapter, IDF 2"	**E33082**
	Aseptoflex adapter, RJT 2"	**E33092**
	Aseptoflex adapter, APV	**E33025**

Type	Description	Order no.
Temperature sensors		
	Aseptoflex adapter, SMS 2" / DN 50	**E33032**
	Aseptoflex adapter, SMS 2.5" / DN 65	**E33033**
	Aseptoflex adapter with clamping flange, Brewery D48	**E33043**
	Aseptoflex adapter, SMS 1.5" GWD	**E33071**
	Aseptoflex adapter, DIN11851 - 1.5" / DN40	**E33012**
	Aseptoflex adapter, DIN11851 - 2" / DN50	**E33013**
	Aseptoflex adapter, DIN11851 - 2.5" / DN65	**E33014**
	Aseptoflex adapter, DIN11851 - 3" / DN80	**E33015**
	Aseptoflex adapter, Clamp 1.5"	**E33001**
	Aseptoflex adapter, SMS 1.5" / DN 40	**E33031**

Visit our website: www.ifm-electronic.com

Type	Description	Order no.
Temperature sensors		
	Aseptoflex adapter, Varivent D50	**E33021**
	Aseptoflex adapter, Varivent D68	**E33022**
	Aseptoflex adapter with clamping flange, DRD D65	**E33042**
	Aseptoflex adapter, Suedmo DN25	**E33051**
	Aseptoflex adapter Suedmo DN25 with O-ring	**E33061**
Diagnostic systems		
	Expert software for efector octavis	**VES001**
	Parameter setting software for VSExxx	**VES003**
	Parameter setting cable for efector octavis ifm electronic straight / straight	**E11572**
	USB/RS485 adapter cable ifm electronic straight / straight	**E30098**
	Power supply	**E30080**

Type	Description	Order no.
Diagnostic systems		
	Pulse generator	**E30082**
	Y connection cable ifm electronic 2 way	**E11664**
	Ø 8.4 / 15 mm for efector octavis	**E30115**
Evaluation systems and power supplies		
	Angle bracket for types M18	**E10736**
	Angle bracket for types M30	**E10737**
	Mounting clamp for types M18	**E10076**
	Mounting clamp for types M30	**E10077**
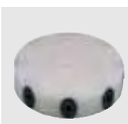	Target wheel	**E89010**
	Target for pulse pickups	**E89013**

Visit our website: www.ifm-electronic.com



Technical information and customer service

Wiring diagrams

Fluid sensors and diagnostic systems	232 - 234

Scale drawings

Level sensors	236 - 238
Flow sensors	239 - 242
Pressure	243 - 248
Temperature sensors	249 - 251
Diagnostic systems	252
Evaluation systems, power supplies	253 - 257
Connection technology	258 - 271

Technical glossary

Fluid sensors and diagnostic systems	272 - 281

ifm information and ordering service

Other ifm products	282 - 285
Internet service	286 - 287
Customer service	288
Ordering service	289
Addresses	290 - 291

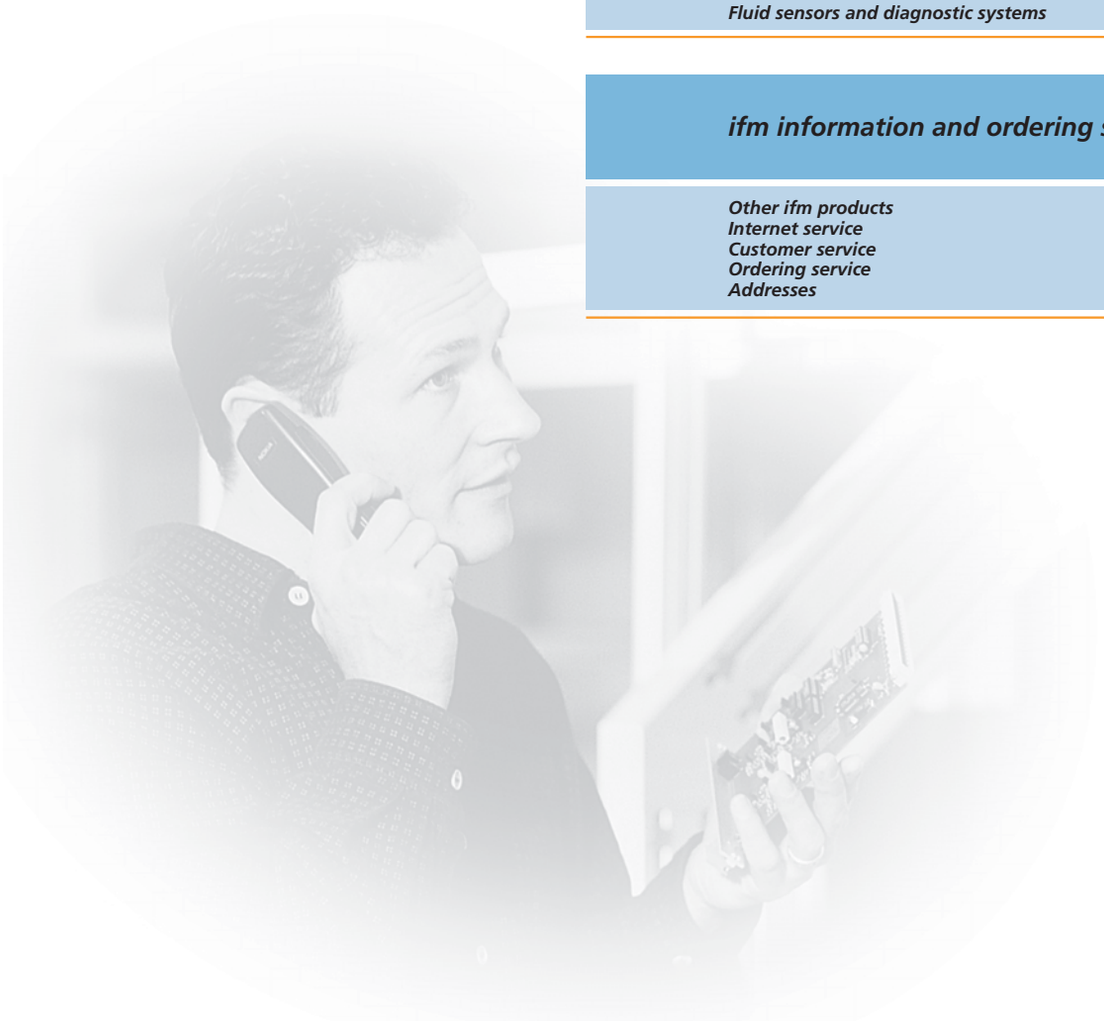

1

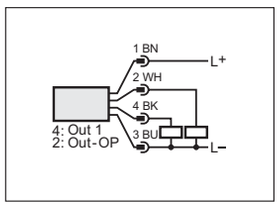

2

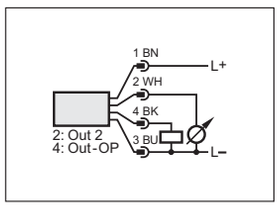

3

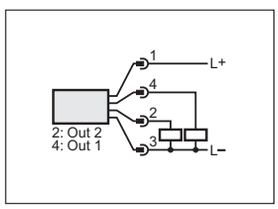

4

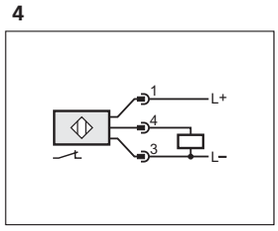

5

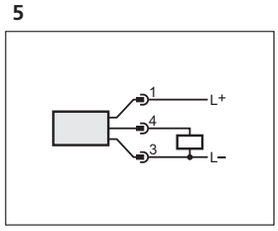

6

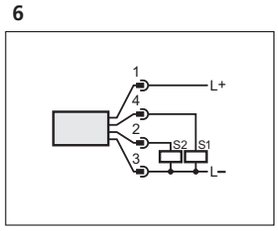

7

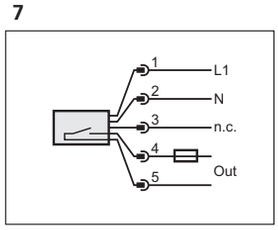

8

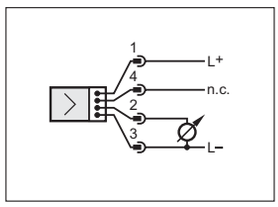

9

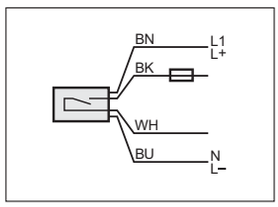

10

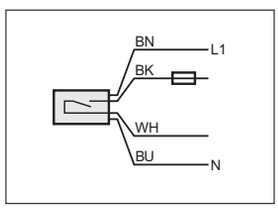

11

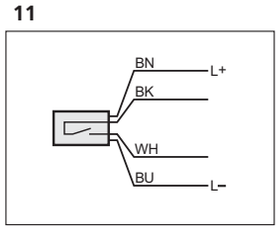

12

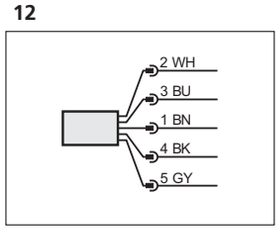

13

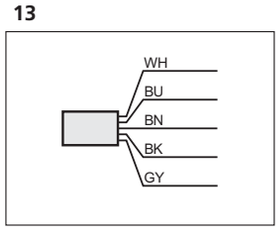

14

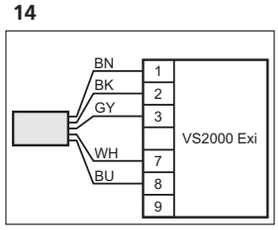

15

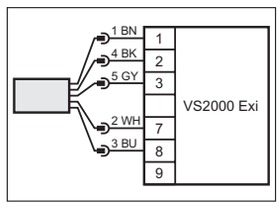

16

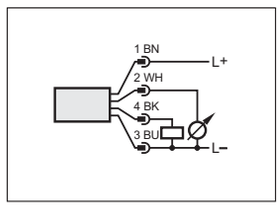

17

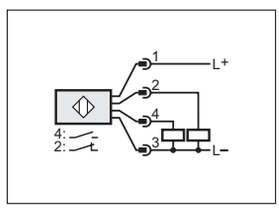

18

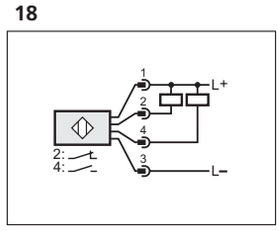

19

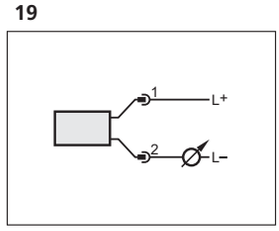

20

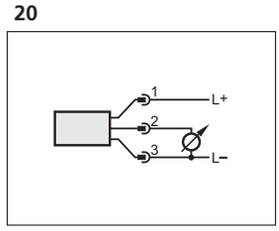

21

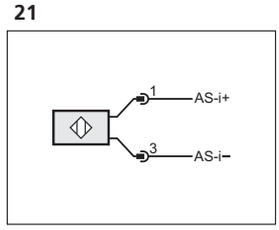

22

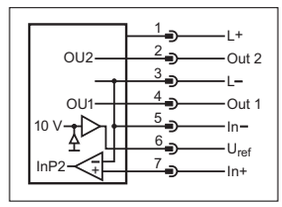

23

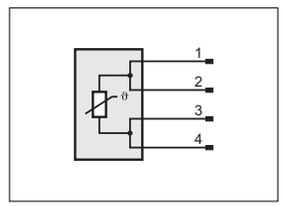

24

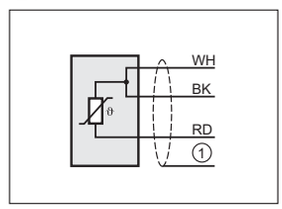

1: screen (not connected to the housing)

25

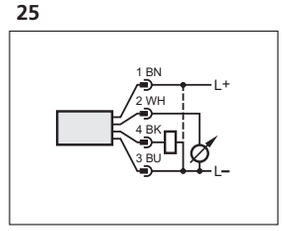

Visit our website: www.ifm-electronic.com

26

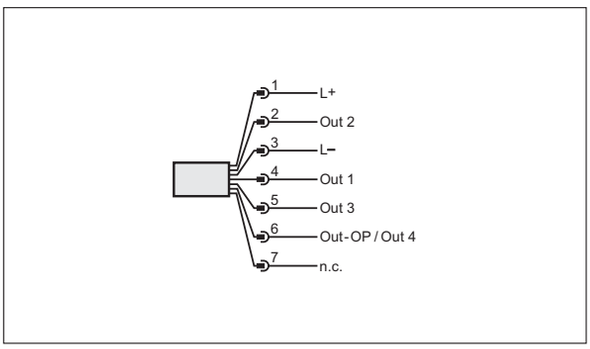

27

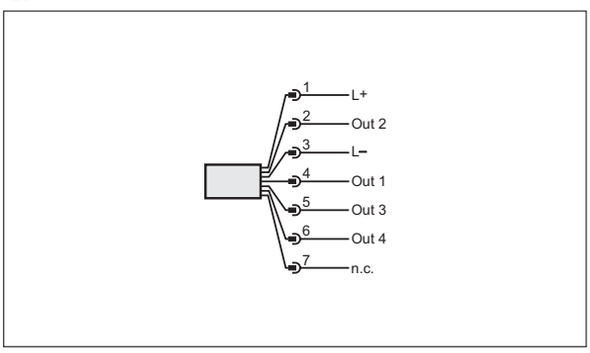

28

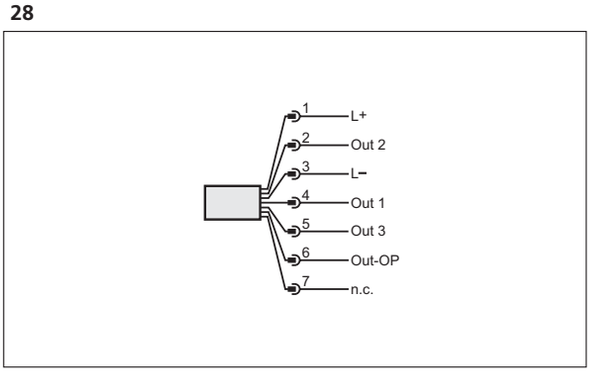

29

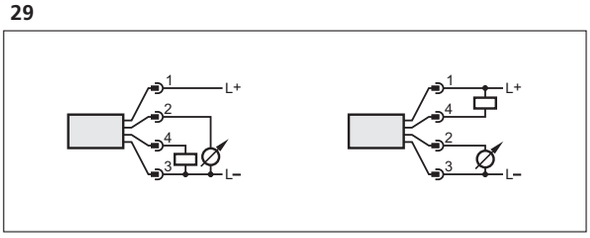

30

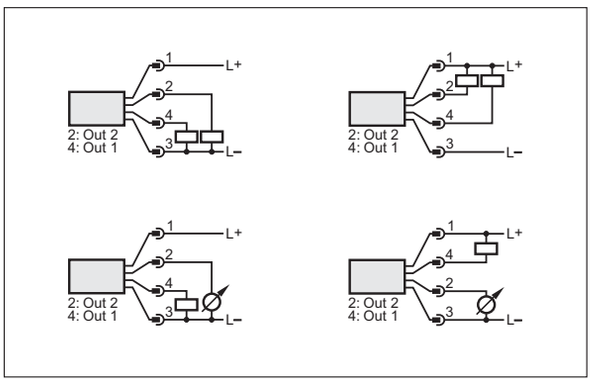

31

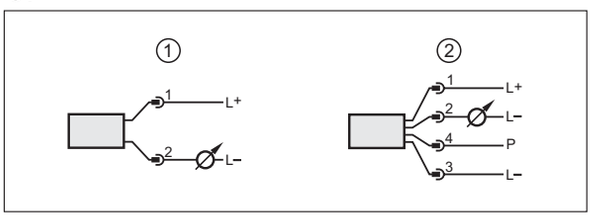

1: Normal operation
2: Programming operation
(P = communication via EPS / FDT interface)

32

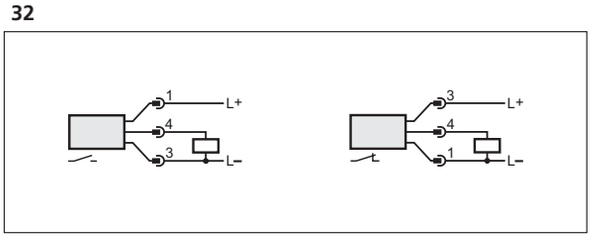

33

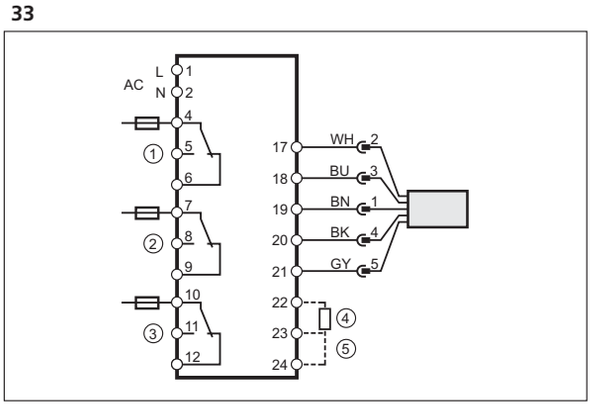

1: Flow monitoring
2: Wire break monitoring
3: Temperature monitoring
4: Power-on delay time
5: Selection liquid / gas

34

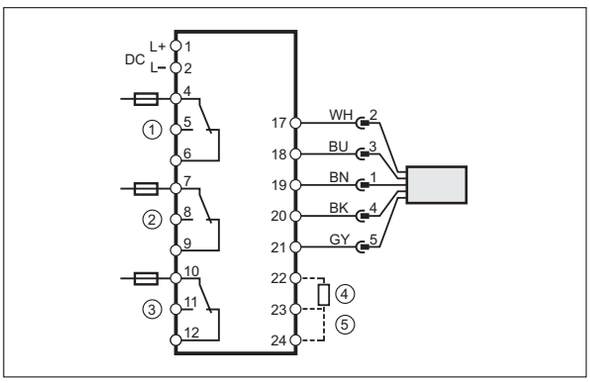

1: Flow monitoring
2: Wire break monitoring
3: Temperature monitoring
4: Power-on delay time
5: Selection liquid / gas

35

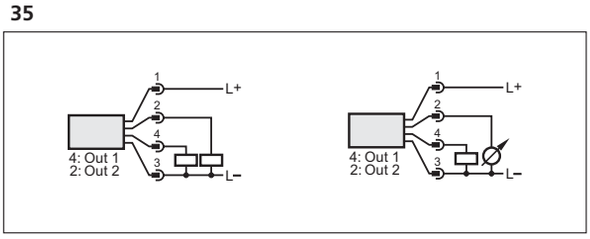

36

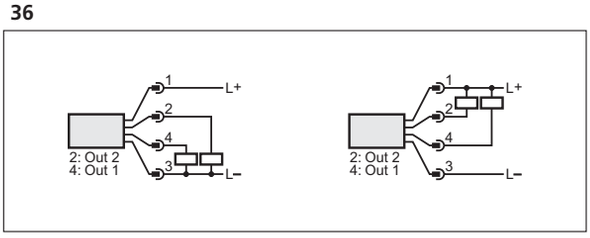

37

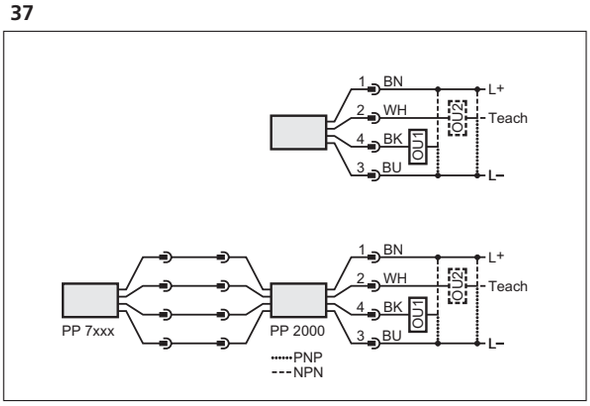

38

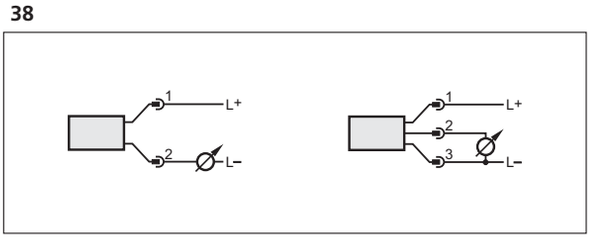

39

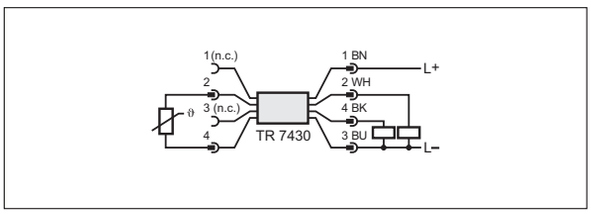

40

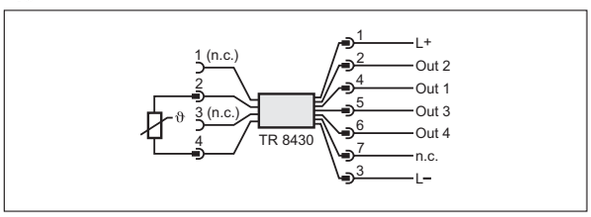

41

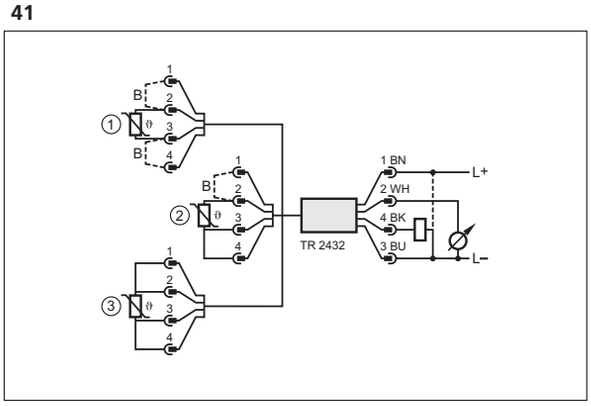

1: Two-wire sensor
2: Three-wire sensor
3: Four-wire sensor
B: link

42

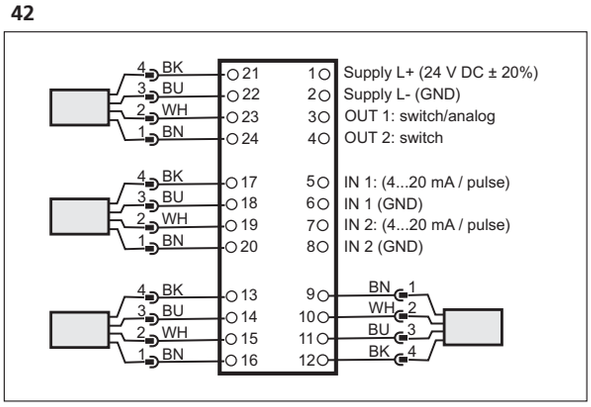

Visit our website: www.ifm-electronic.com

Continuous

1 **type LK ....**

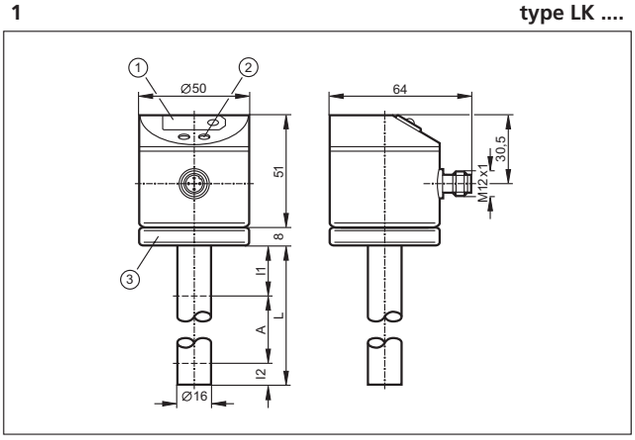

1: 7-segment LED display, 2: Programming buttons, 3: Housing connection with cable lug for cable 1.5 - 2.5 mm , Page 23

2 **type LK ....**

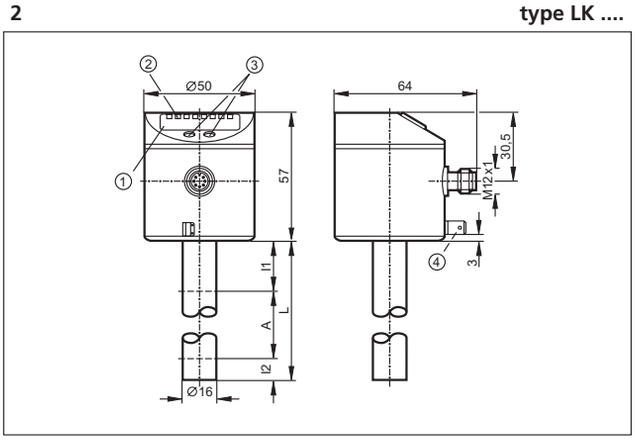

1: 4-digit alphanumeric display, 2: LEDs, 3: Programming buttons, 4: Housing connection (flat-pin connector 6.3 mm following DIN 46244), Page 23

3 **type LR ....**

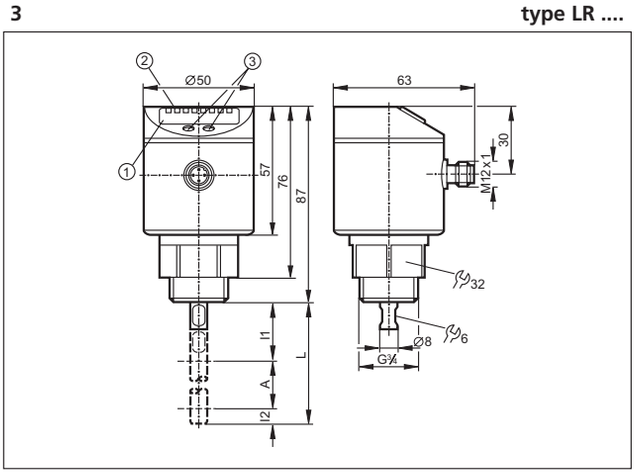

1: 4-digit alphanumeric display, 2: LEDs (display unit / switching status), 3: Programming buttons, Page 25

4 **type LR ....**

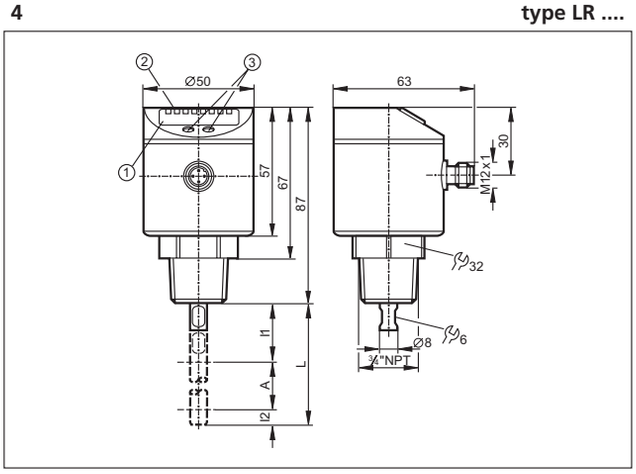

1: 4-digit alphanumeric display, 2: LEDs (display unit / switching status), 3: Programming buttons, Page 25

5 **type LR ....**

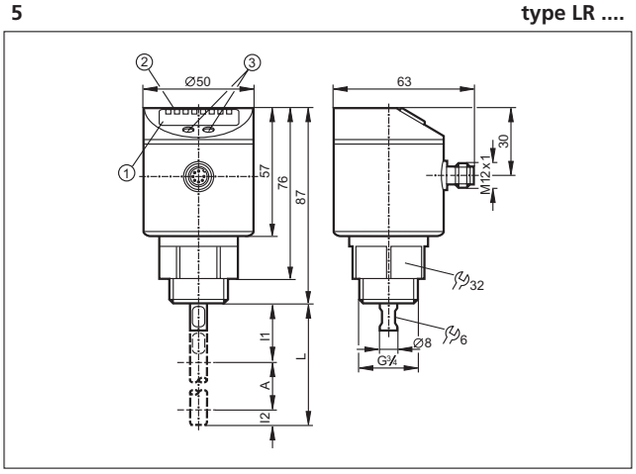

1: 4-digit alphanumeric display, 2: LEDs (display unit / switching status), 3: Programming buttons, Page 25

6 **type LR ....**

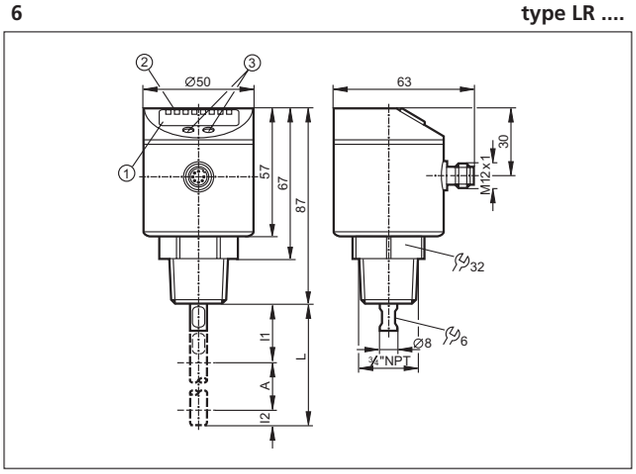

1: 4-digit alphanumeric display, 2: LEDs (display unit / switching status), 3: Programming buttons, Page 25

Visit our website: www.ifm-electronic.com

Continuous

7 **type LL, LT ....**

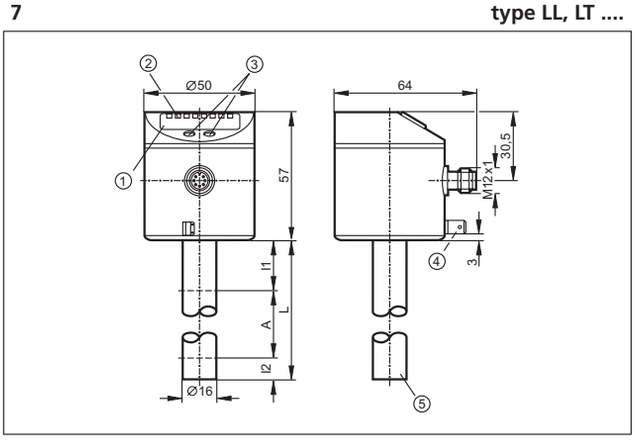

1: 4-digit alphanumeric display, 2: LEDs, 3: Programming buttons, 4: Housing connection (flat-pin connector 6.3 mm following DIN 46244), 5: Position of the temperature measuring element, Page 27, 29

8 **type PE, PN, PY ....**

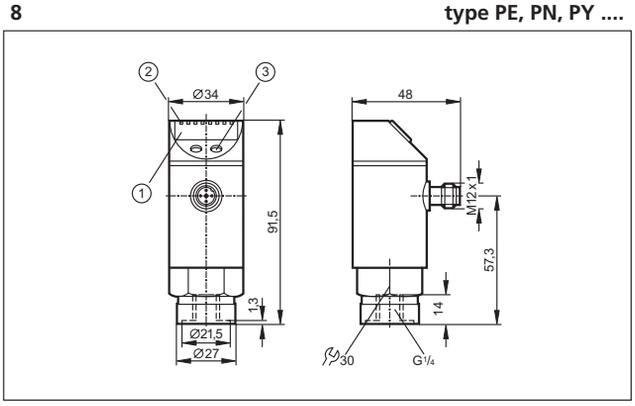

1: 4-digit alphanumeric display, 2: LEDs (display unit / switching status), 3: Programming button, Page 31

9 **type PN ....**

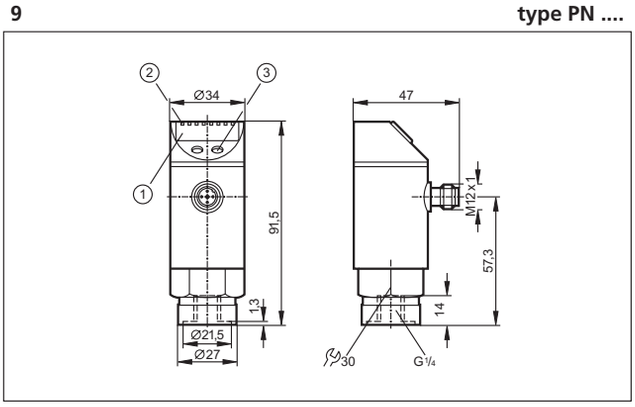

1: 4-digit alphanumeric display, 2: LEDs (display unit / switching status), 3: Programming button, Page 31

10 **type PI ....**

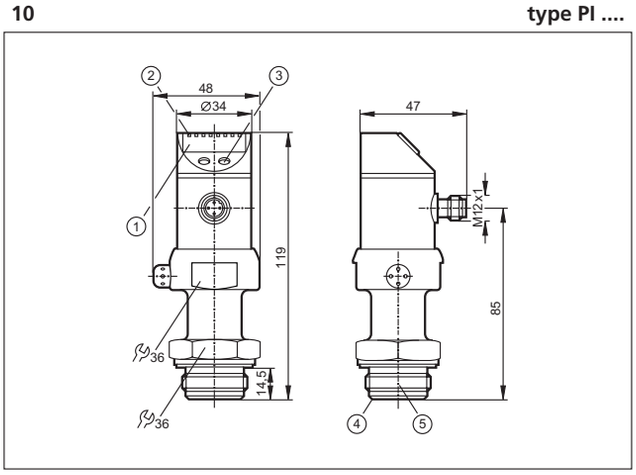

1: 4-digit alphanumeric display, 2: LEDs (display unit / switching status), 3: Programming button, 4: Aseptoflex sealing edge, 5: Aseptoflex thread, Page 33

Point level

1 **type LI ....**

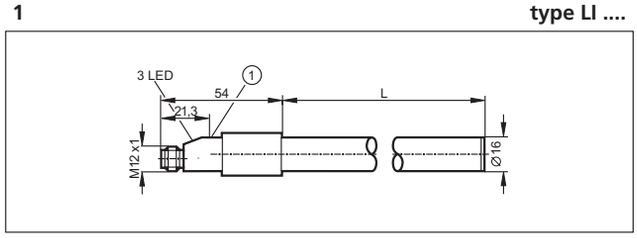

1: Programming button, Page 35

Flow sensors and transmitters

1 **type SI ....**

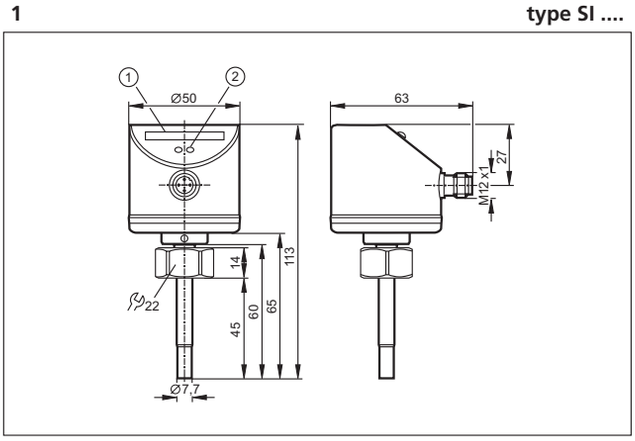

1: LED display, 2: setting pushbutton, Page 53, 57

2 **type SI ....**

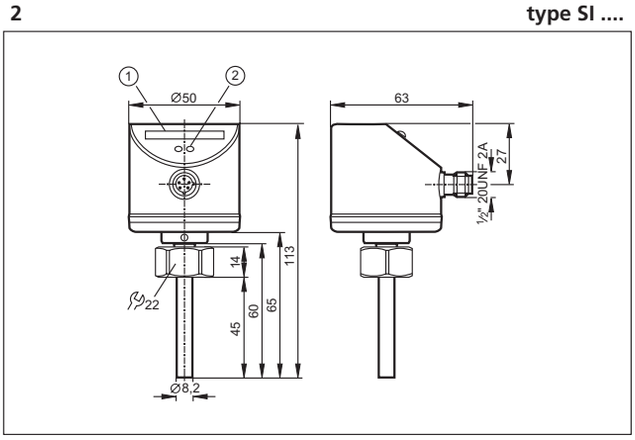

1: internal thread M18 x 1.5, 2: setting pushbuttons, Page 53

3 **type SI ....**

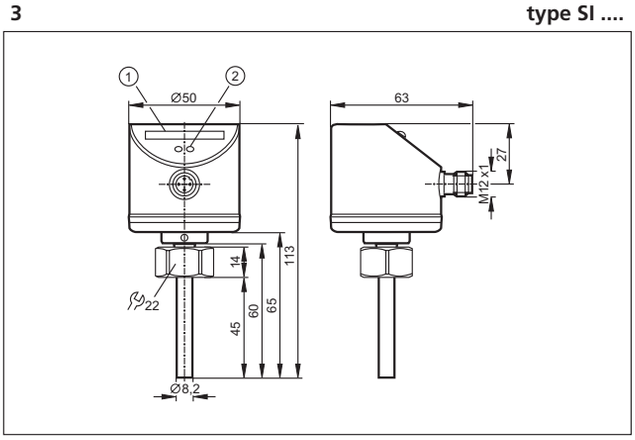

1: LED display, 2: setting pushbutton, Page 55

4 **type SL ....**

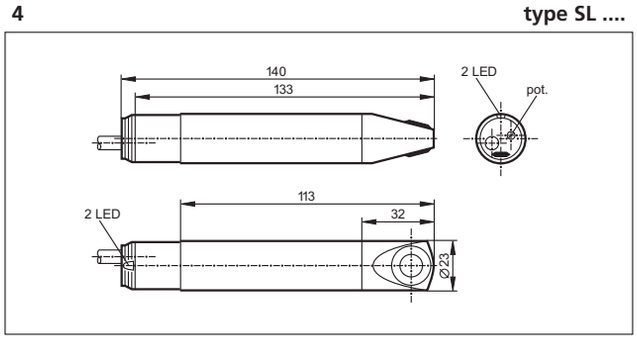

Page 59

5 **type SF ....**

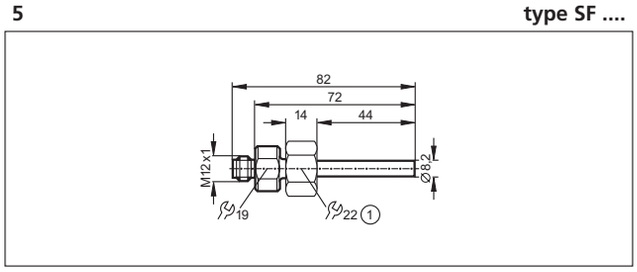

1: internal thread M18 x 1.5, Page 61

6 **type SF ....**

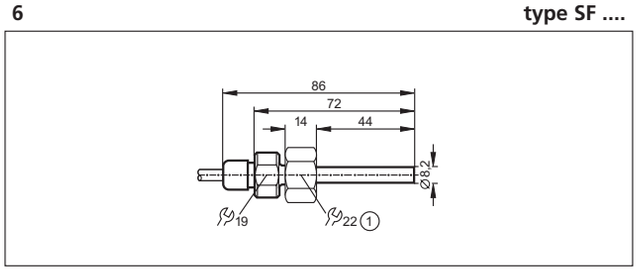

1: internal thread M18 x 1.5, Page 61

7 **type SF ....**

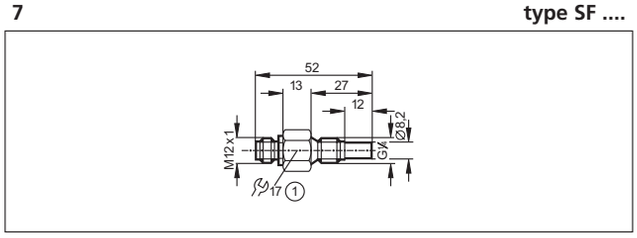

1: tightening torque max. 8 Nm, Page 63

8 **type SF ....**

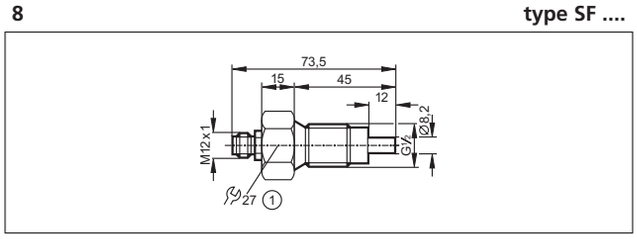

1: tightening torque max. 30 Nm, Page 63

Visit our website: www.ifm-electronic.com

Flow sensors and transmitters

9 **type SF ....**

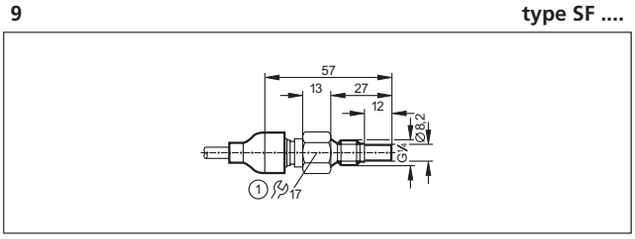

1: tightening torque max. 8 Nm, Page 63, 69

10 **type SF ....**

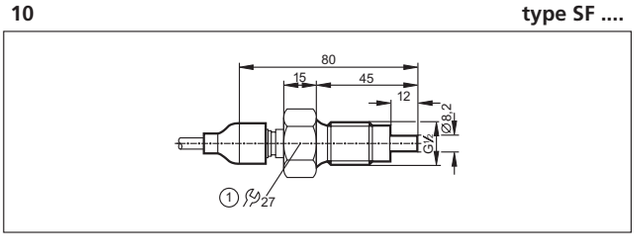

1: tightening torque max. 30 Nm, Page 63, 69

11 **type SN, SR ....**

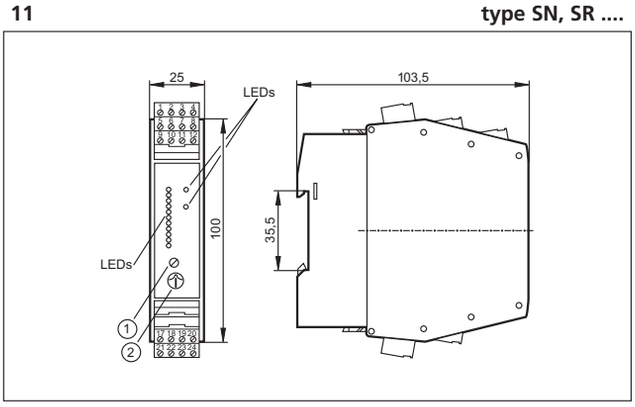

1: Potentiometer (switch point flow), 2: Potentiometer (switch point temperature), Page 65

12 **type ....**

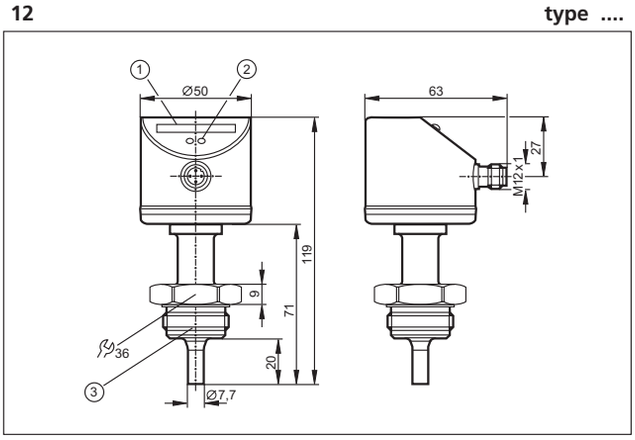

1: LED display, 2: setting pushbutton, 3: Aseptoflex thread, Page 67

13 **type ....**

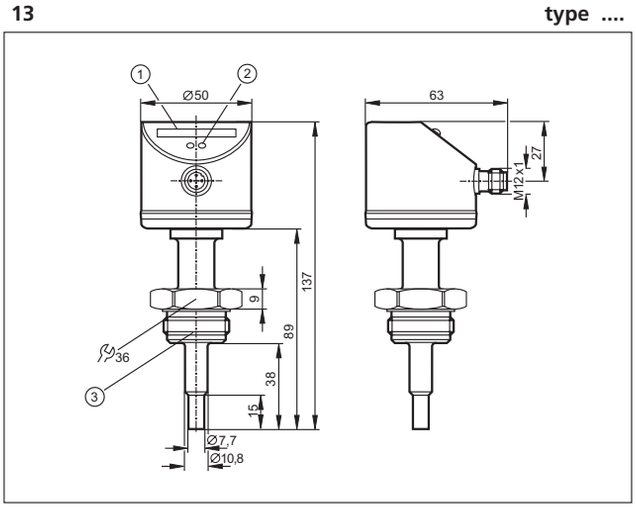

1: LED display, 2: setting pushbutton, 3: Aseptoflex thread, Page 67

14 **type ....**

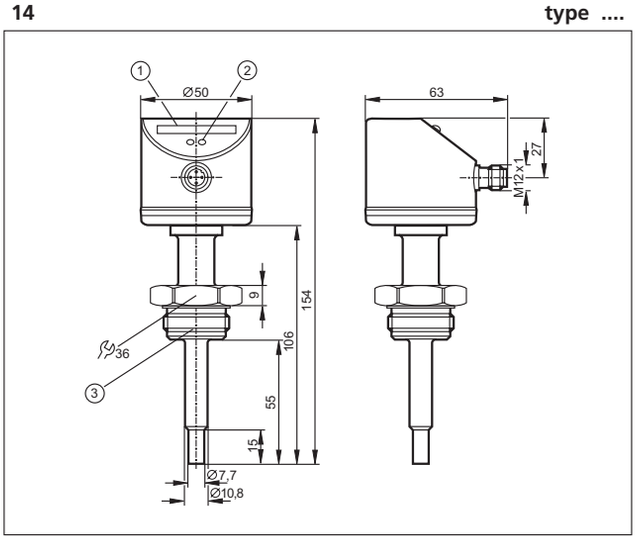

1: LED display, 2: setting pushbutton, 3: Aseptoflex thread, Page 67

15 **type SF ....**

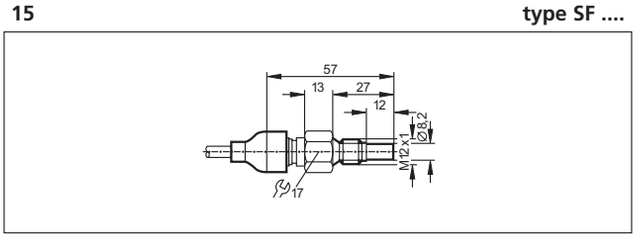

Page 69

16 **type SF ....**

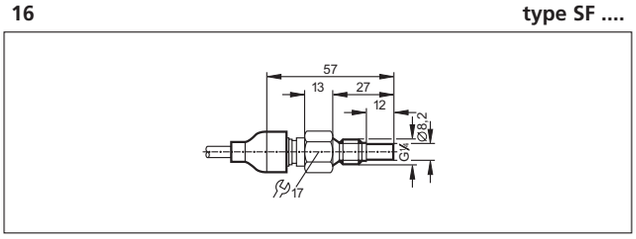

Page 69

Visit our website: www.ifm-electronic.com

Flow sensors and transmitters

17 **type SF ....**

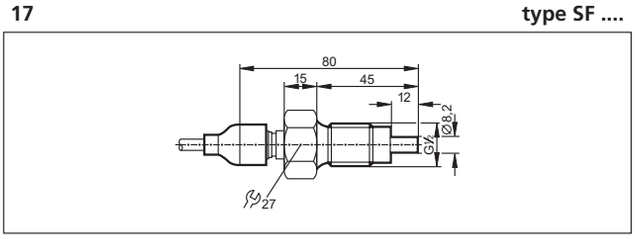

Page 69

18 **type SF ....**

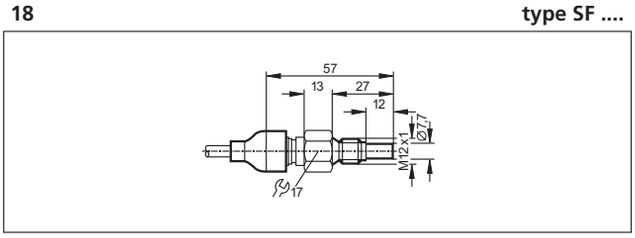

Page 69

19 **type SF ....**

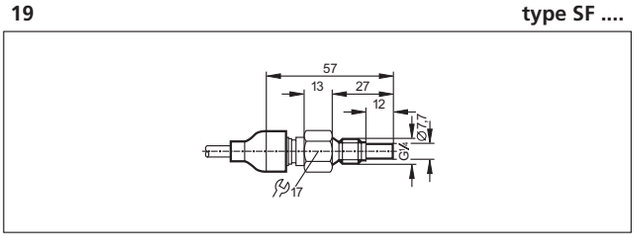

Page 69

20 **type SF ....**

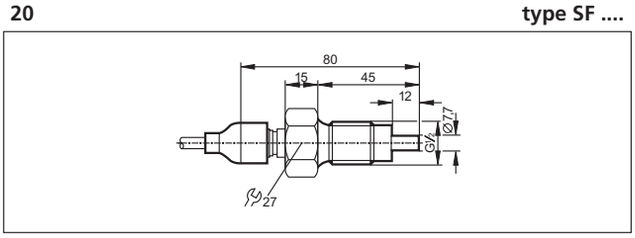

Page 69

21 **type SF ....**

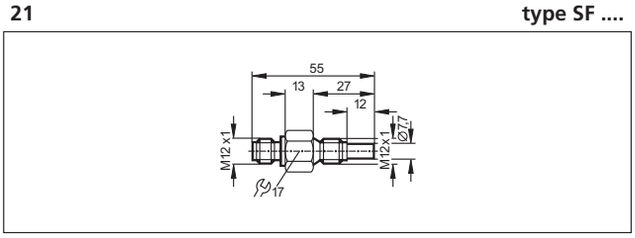

Page 69

22 **type SF ....**

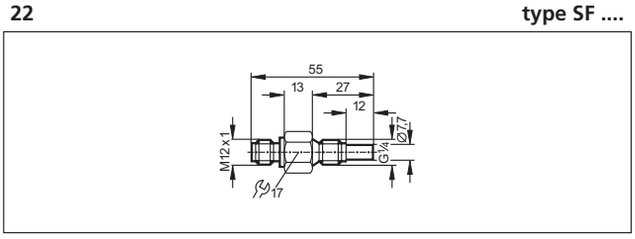

Page 69

23 **type SF ....**

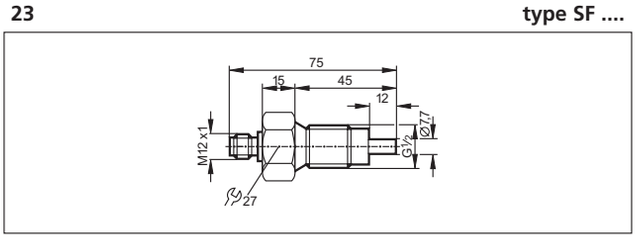

Page 69

24 **type SN, SR ....**

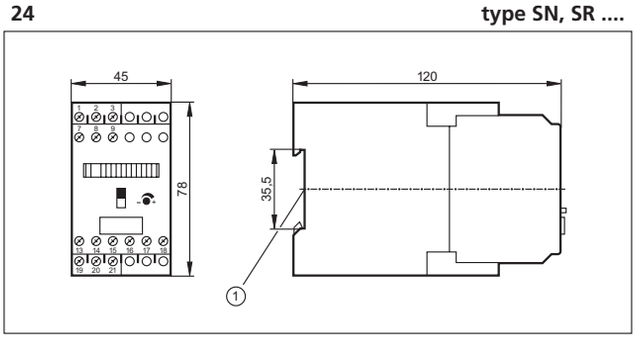

1: mounting on DIN rail, Page 71

Flow meters

1 **type SD ....**

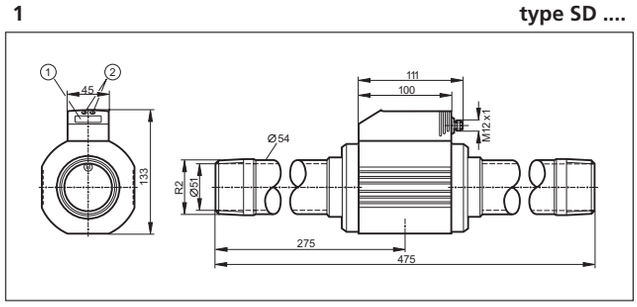

1: 4-digit alphanumeric display, 2: Programming buttons, Page 73

2 **type SD ....**

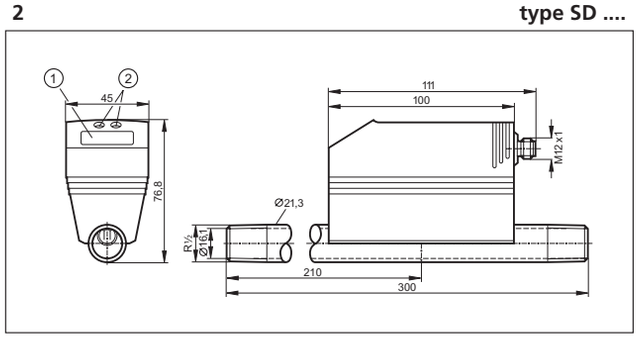

1: 4-digit alphanumeric display, 2: Programming buttons, Page 73, 75

3 **type SD ....**

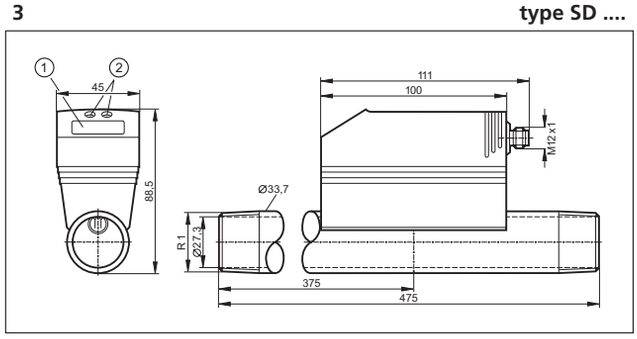

1: 4-digit alphanumeric display, 2: Programming buttons, Page 73

4 **type SD ....**

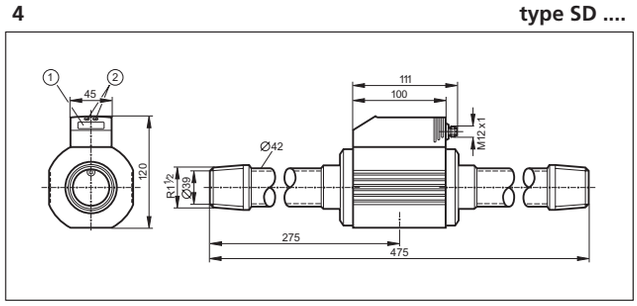

1: 4-digit alphanumeric display, 2: Programming buttons, Page 73

5 **type SD ....**

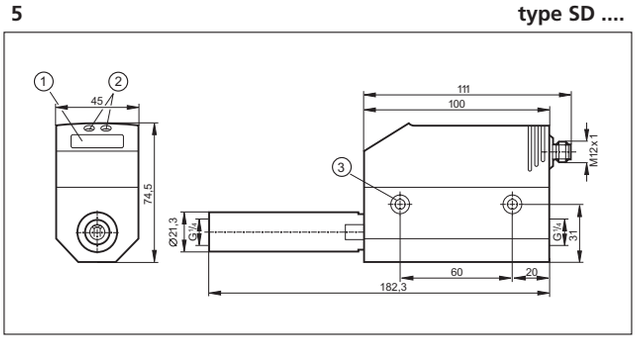

1: 4-digit alphanumeric display, 2: Programming buttons,
3: hole for M5 fixing screw, Page 75

6 **type SU ....**

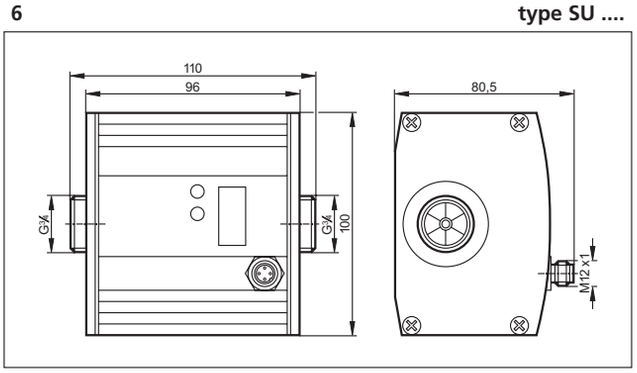

installation length with pipe adapter E40151 / E40154: 185 mm, Page 77

7 **type SU ....**

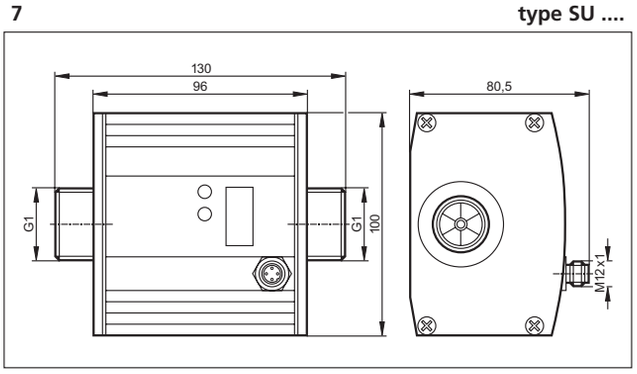

installation length with pipe adapter E40152 / E40155: 205 mm,
installation length with pipe adapter E40153 / E40156: 215 mm,
Page 77

Visit our website: www.ifm-electronic.com

Pressure sensors and transmitters

1 **type PE, PN ....**

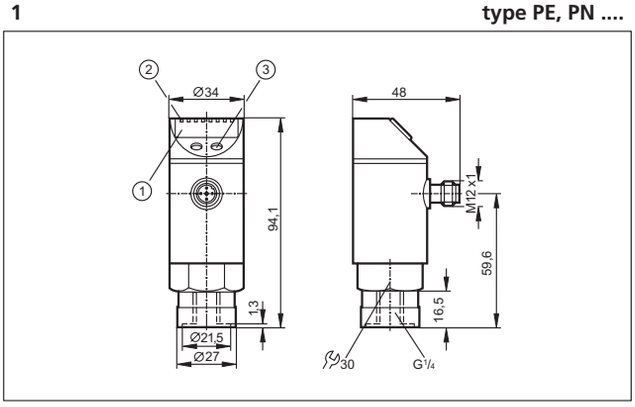

1: 4-digit alphanumeric display, 2: LEDs (display unit / switching status), 3: Programming button, Page 91, 93, 97

2 **type PE, PN, PY ....**

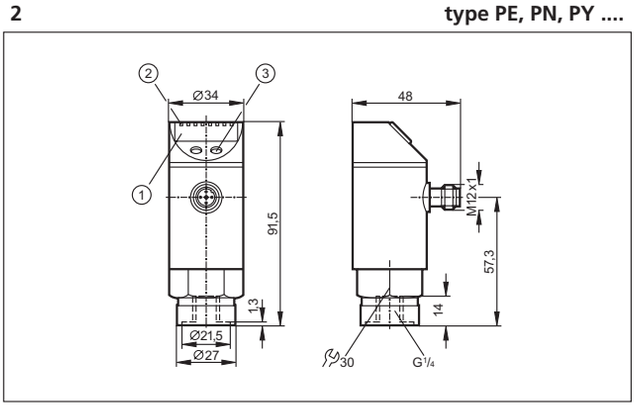

1: 4-digit alphanumeric display, 2: LEDs (display unit / switching status), 3: Programming button, Page 91, 93, 95, 97, 109

3 **type PN ....**

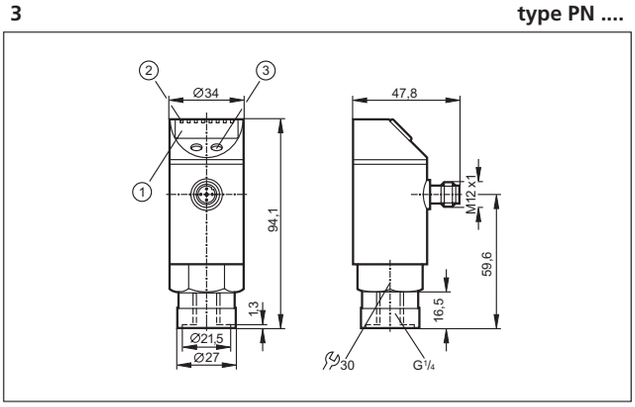

1: 4-digit alphanumeric display, 2: LEDs (display unit / switching status), 3: Programming button, Page 95

4 **type PN ....**

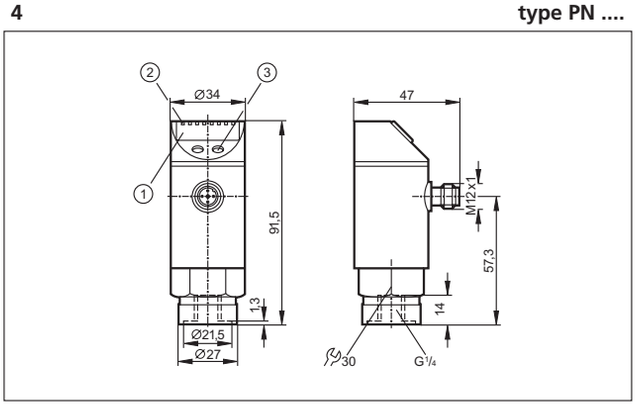

1: 4-digit alphanumeric display, 2: LEDs (display unit / switching status), 3: Programming button, Page 95, 127

5 **type PK ....**

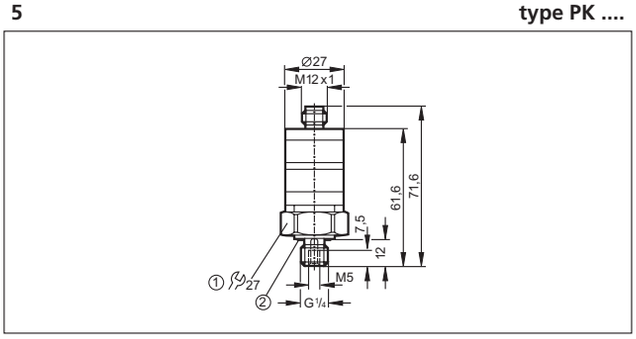

1: tightening torque 25 Nm, 2: sealing FPM / DIN 3869-14, Page 99

6 **type PK ....**

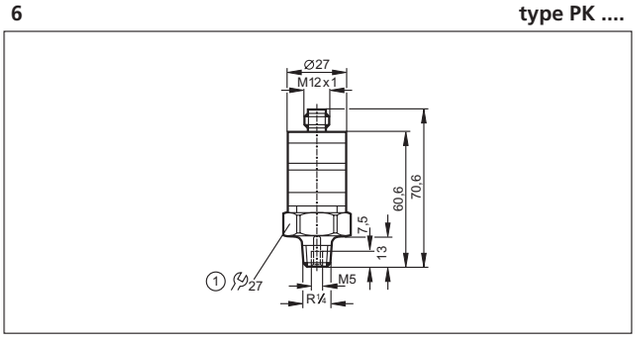

1: tightening torque 25 Nm, Page 99

7 **type PP ....**

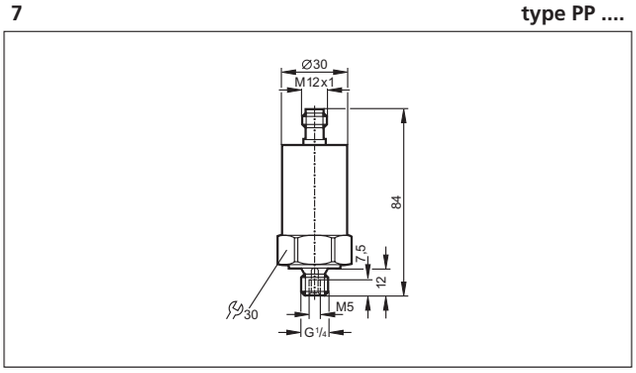

Page 101

Visit our website: www.ifm-electronic.com

Pressure sensors and transmitters

8 **type PA ....**

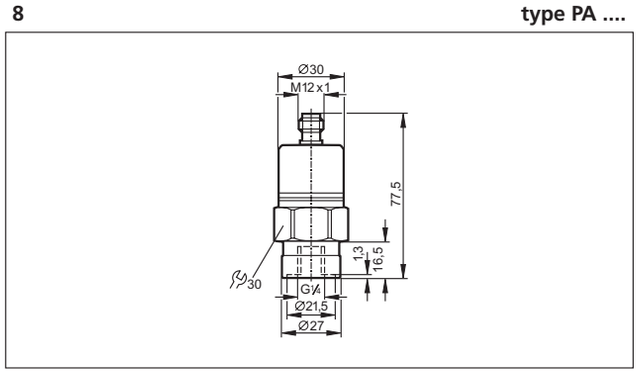

Page 103

9 **type PA ....**

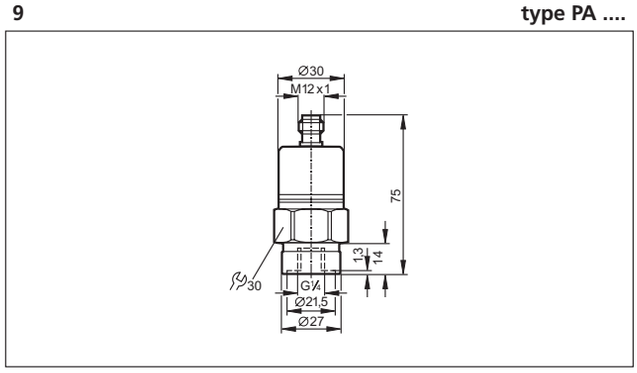

Page 103

10 **type PA ....**

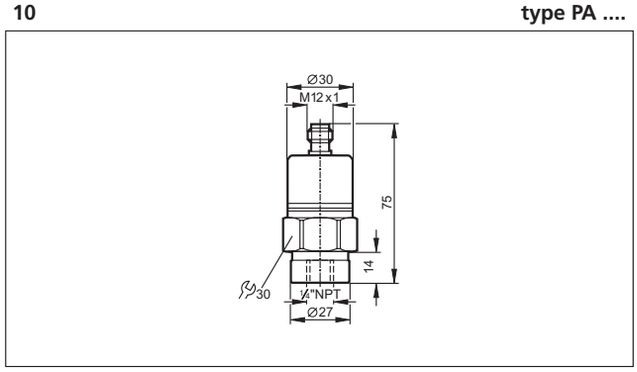

Page 103

11 **type PA ....**

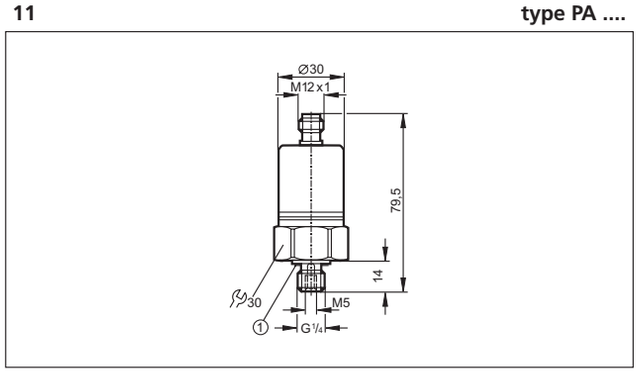

1: sealing FPM / DIN 3869-14, Page 103

12 **type PP ....**

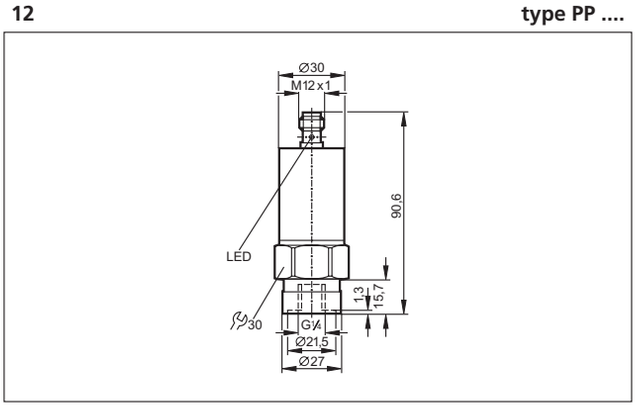

Page 103

13 **type PP ....**

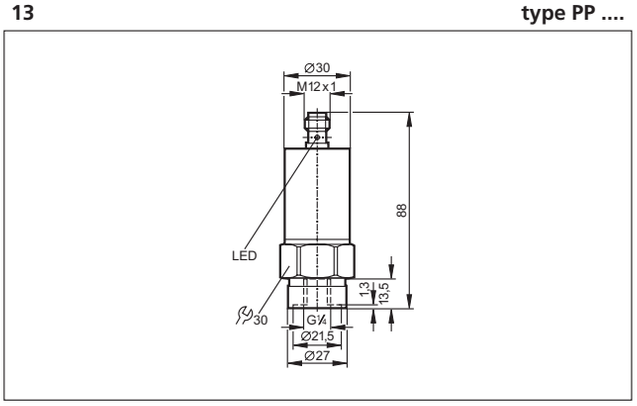

Page 103

Visit our website: www.ifm-electronic.com

Pressure sensors and transmitters

14 **type PS ....**

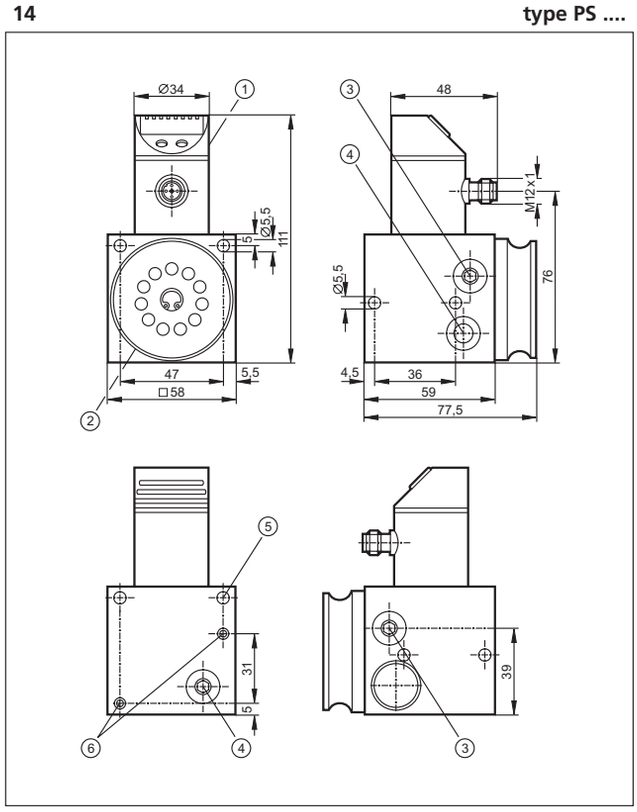

1: pressure sensor, 2: setting dial for adjusting the pneumatic bridge, 3: supply pressure, 4: measuring branch, 5: mounting hole, 6: thread M5, Page 105

15 **type PY ....**

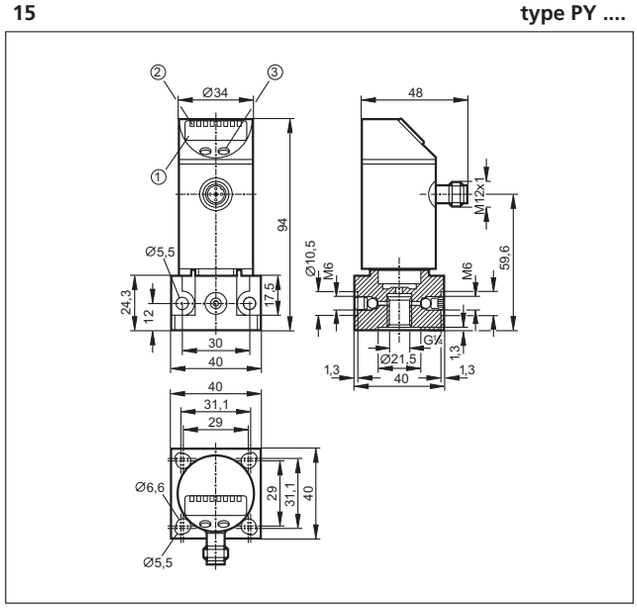

1: 4-digit alphanumeric display, 2: LEDs (display unit / switching status), 3: Programming button, Page 107

16 **type PY ....**

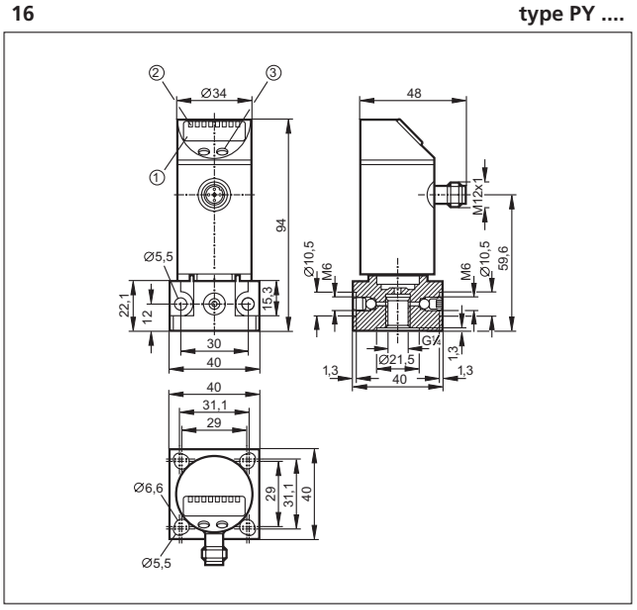

1: 4-digit alphanumeric display, 2: LEDs (display unit / switching status), 3: Programming button, Page 107

17 **type PY ....**

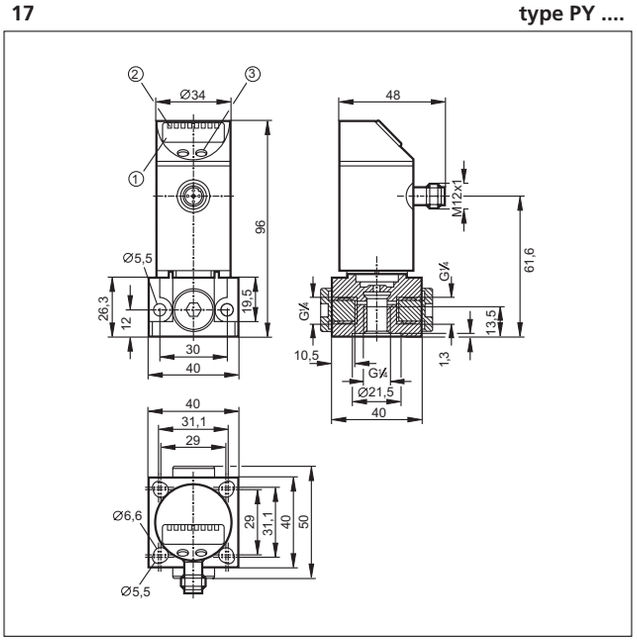

1: 4-digit alphanumeric display, 2: LEDs (display unit / switching status), 3: Programming button, Page 107

Visit our website: www.ifm-electronic.com

Pressure sensors and transmitters

18 **type PP ....**

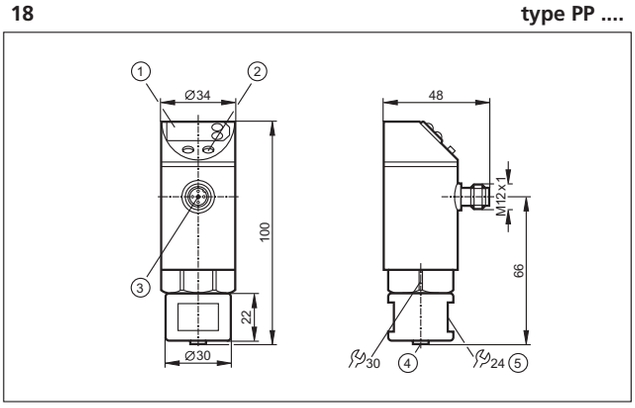

1: 7-segment LED display, 2: Programming button, 3: connection for voltage supply and output signals, 4: connection for EPS sensor, 5: Mounting nut, Page 113

19 **type PI ....**

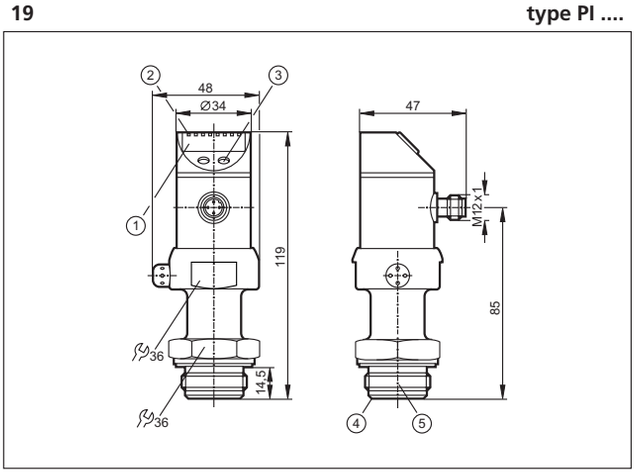

1: 4-digit alphanumeric display, 2: LEDs (display unit / switching status), 3: Programming button, 4: Aseptoflex sealing edge, 5: Aseptoflex thread, Page 115, 117, 119, 121

20 **type PI ....**

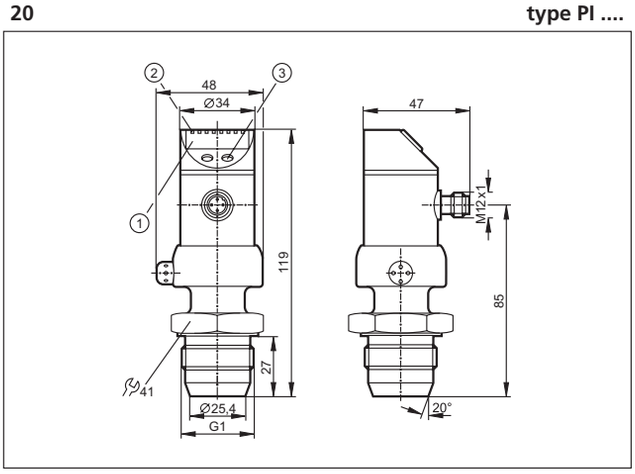

1: 4-digit alphanumeric display, 2: LEDs (display unit / switching status), 3: Programming button, Page 115, 117, 121

21 **type PI ....**

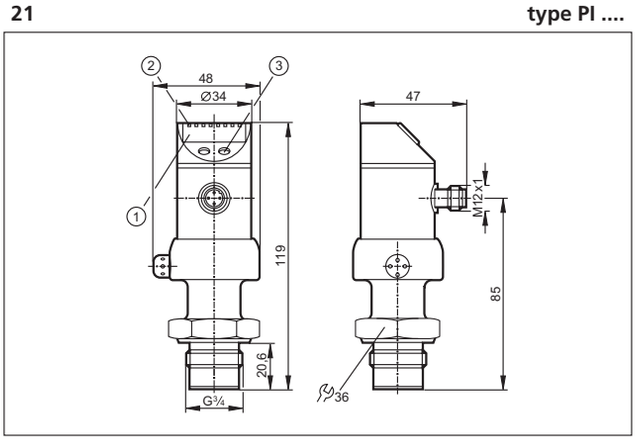

1: 4-digit alphanumeric display, 2: LEDs (display unit / switching status), 3: Programming button, Page 115, 119

22 **type PL ....**

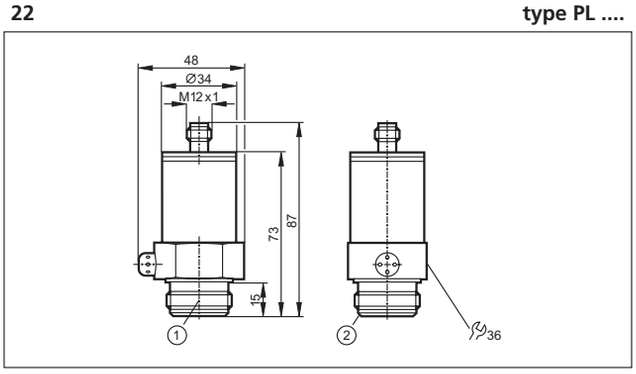

1: Aseptoflex thread, 2: Aseptoflex sealing edge, Page 123

23 **type PL ....**

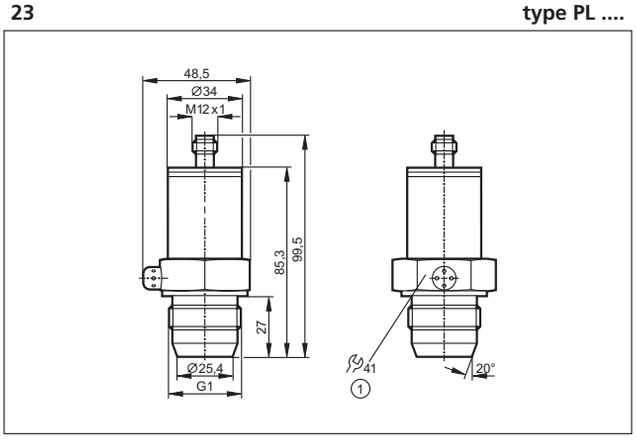

1: tightening torque 20 Nm, Page 123

Visit our website: www.ifm-electronic.com

Pressure sensors and transmitters

24 **type PL ....**

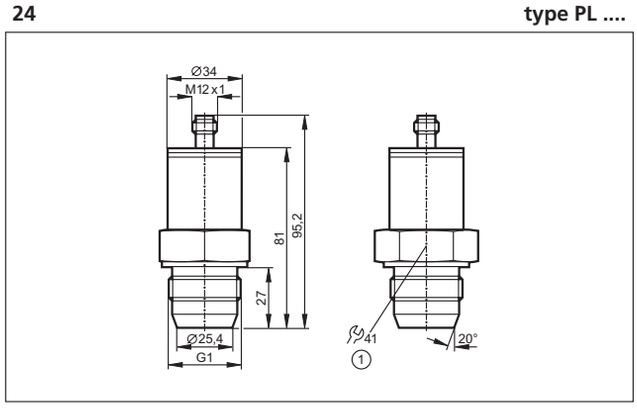

1: tightening torque 20 Nm, Page 123

25 **type PM ....**

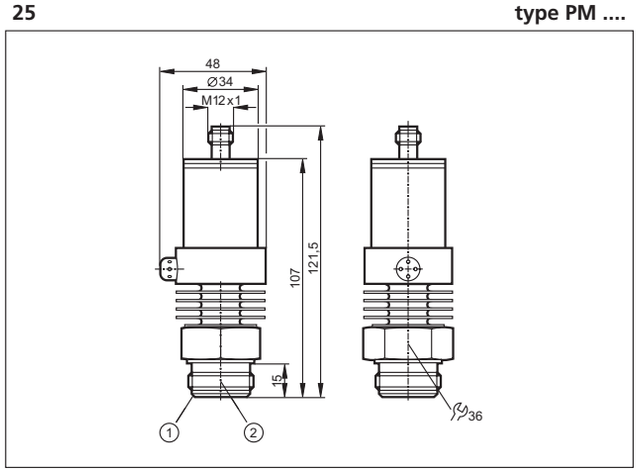

1: Aseptoflex sealing edge, 2: Aseptoflex thread, Page 123

26 **type PM ....**

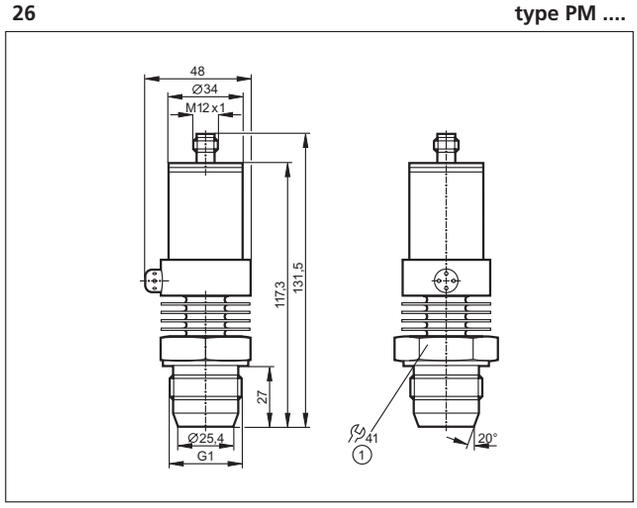

1: tightening torque 20 Nm, Page 123

27 **type PF ....**

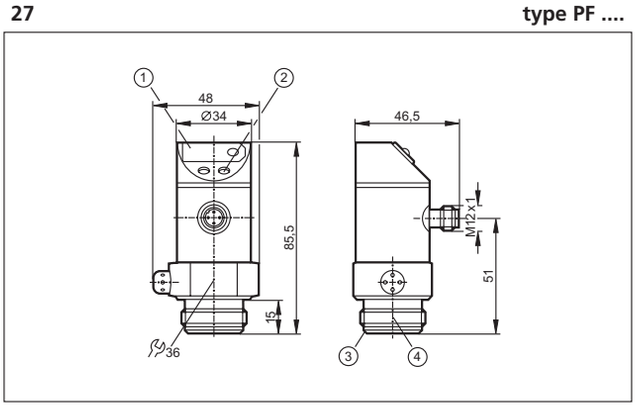

1: 7-segment LED display, 2: Programming button, 3: Aseptoflex sealing edge, 4: Aseptoflex thread, Page 125

28 **type PF ....**

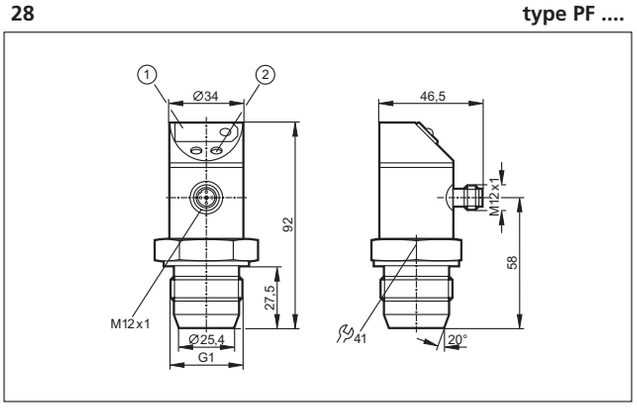

1: 7-segment LED display, 2: Programming button, Page 125

29 **type PF ....**

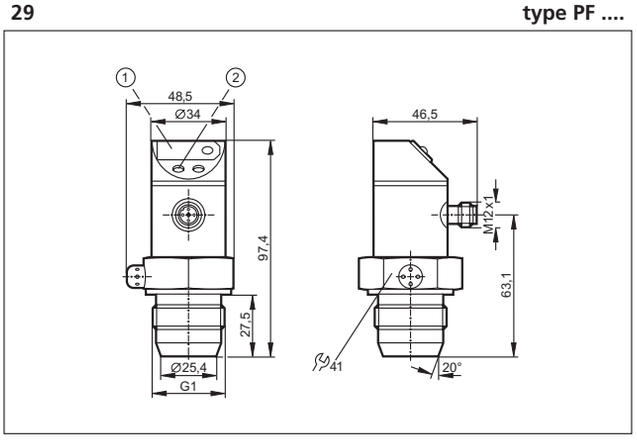

1: 7-segment LED display, 2: Programming button, Page 125, 127

Visit our website: www.ifm-electronic.com

Pressure sensors and transmitters

30 **type PF ....**

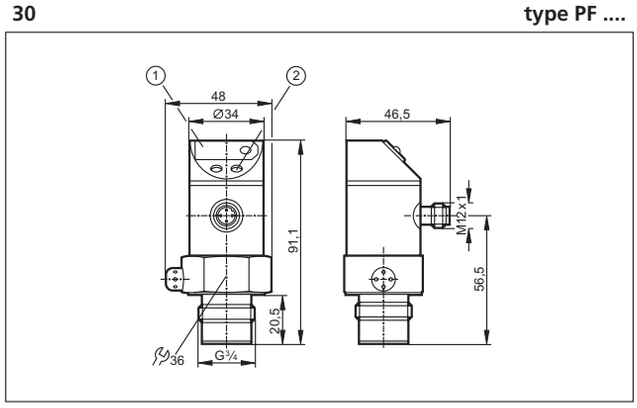

1: 7-segment LED display, 2: Programming button, Page 125

31 **type PN ....**

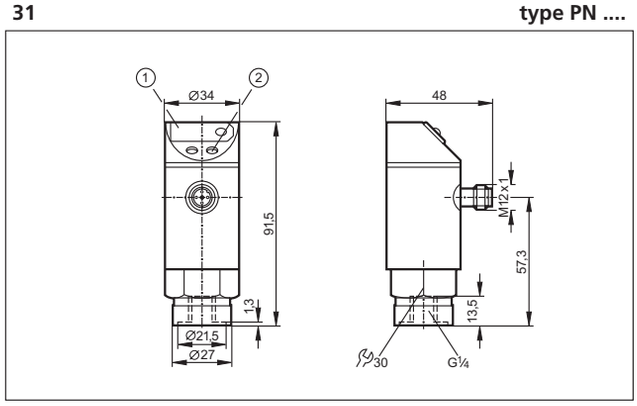

1: 7-segment LED display, 2: Programming button, Page 127

Temperature sensors and transmitters

1 **type TN ....**

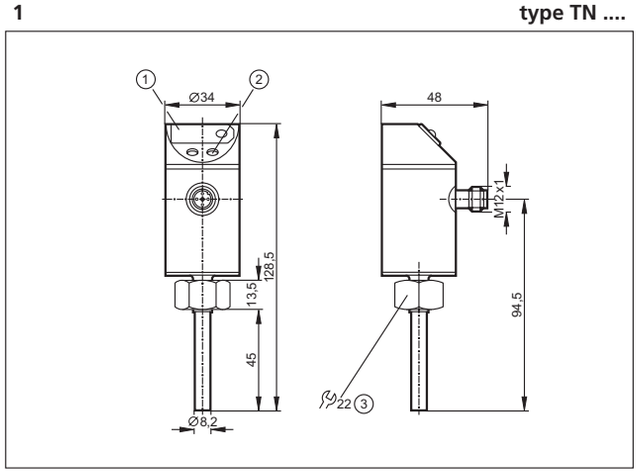

1: 7-segment LED display, 2: Programming button, 3: internal thread M18 x 1.5, Page 137

2 **type TR ....**

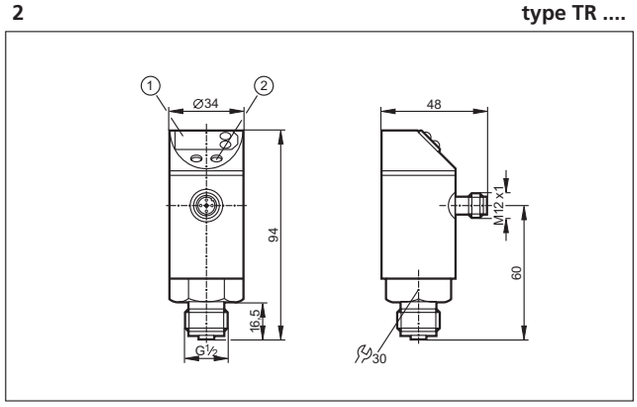

1: 7-segment LED display, 2: Programming button, Page 139

3 **type TR ....**

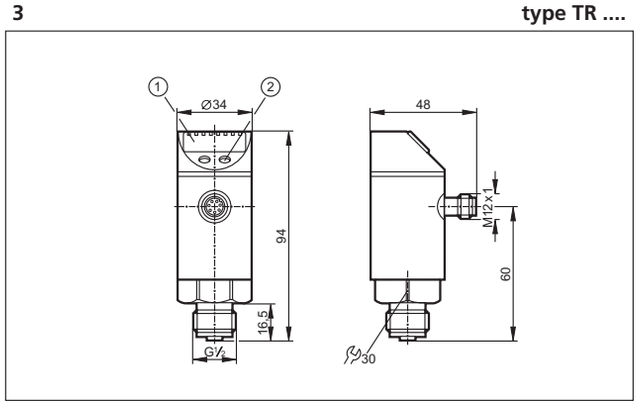

1: 4-digit alphanumeric display, 2: Programming button, Page 139

4 **type TT ....**

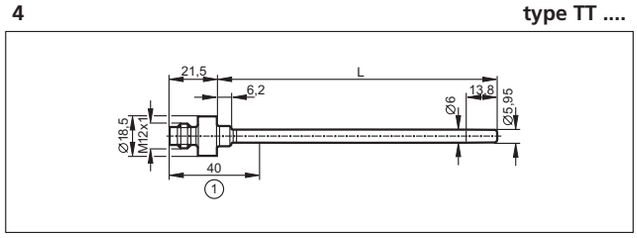

1: plug area, Page 141

5 **type TT ....**

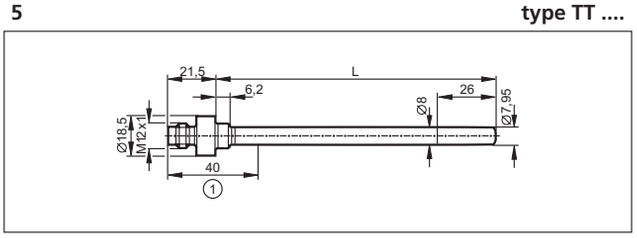

1: plug area, Page 141

6 **type TT ....**

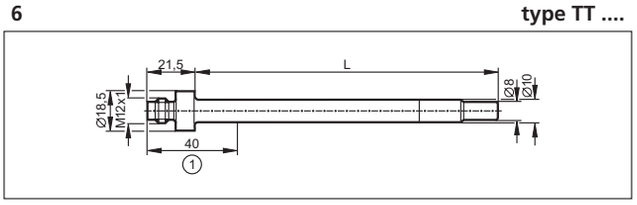

1: plug area, Page 141, 147

7 **type TM ....**

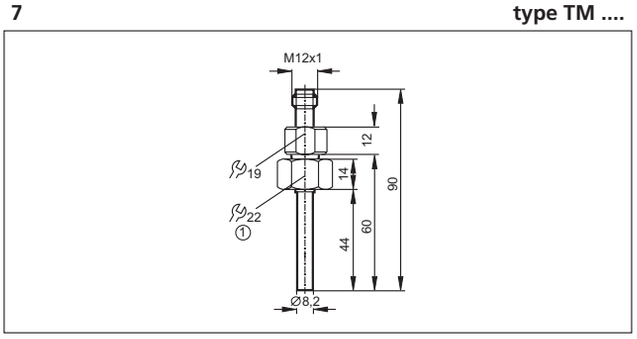

1: internal thread M18 x 1.5, Page 141

8 **type TS ....**

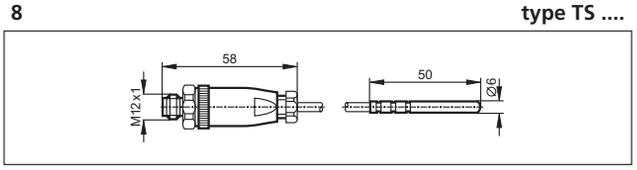

Page 143

9 **type TS ....**

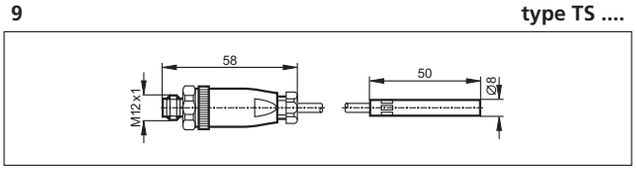

Page 143

10 **type TS ....**

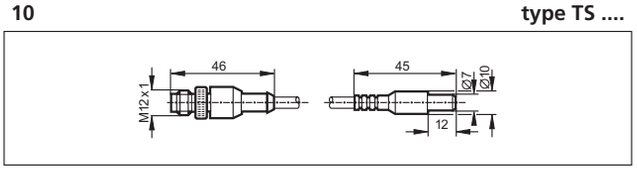

Page 143, 149

Visit our website: www.ifm-electronic.com

Temperature sensors and transmitters

11 **type TS ....**

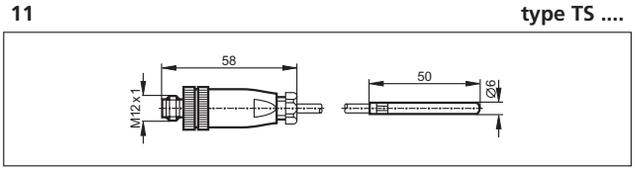

Page 143

12 **type TS ....**

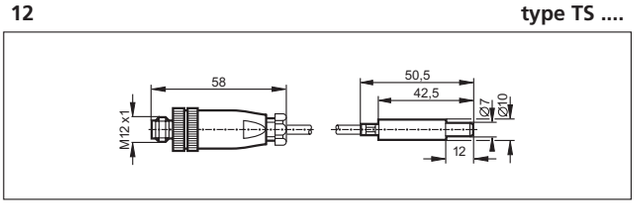

Page 143, 149

13 **type TS ....**

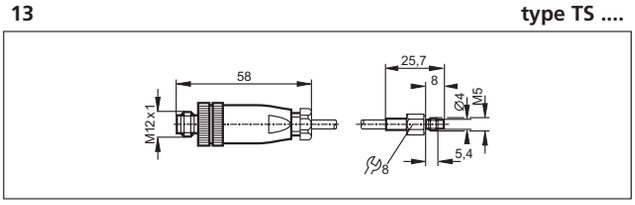

Page 143

14 **type TS ....**

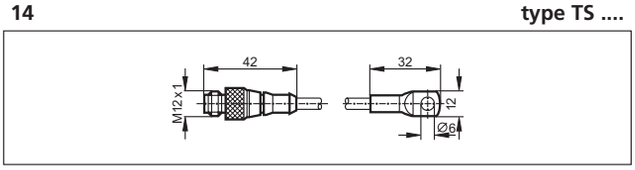

Page 143

15 **type TS ....**

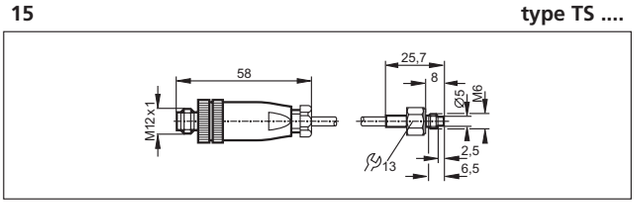

Page 143

16 **type TS ....**

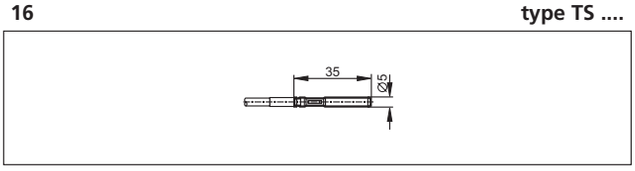

Page 143

17 **type TA ....**

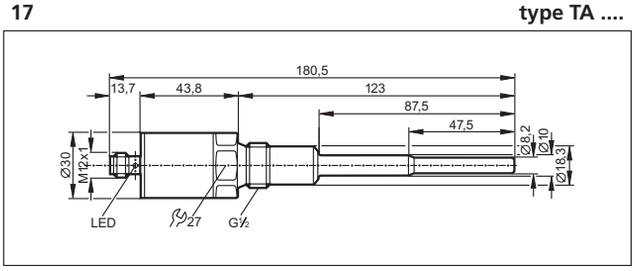

Page 145, 151

18 **type TA ....**

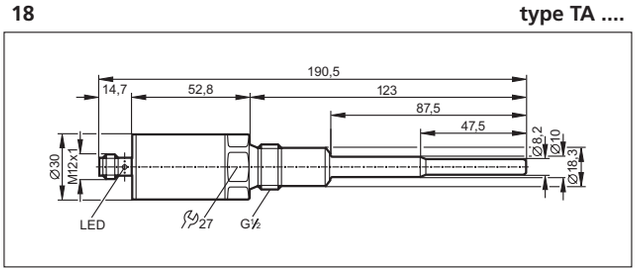

Page 145, 151

19 **type TA ....**

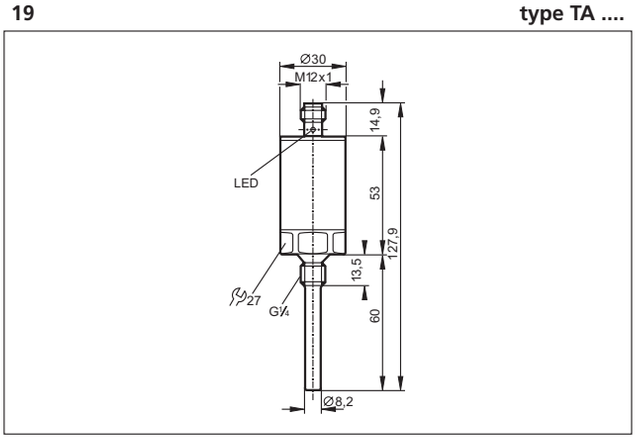

Page 145

20 **type TA ....**

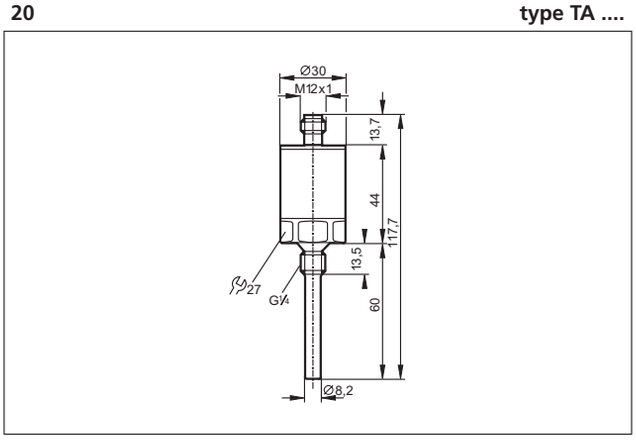

Page 145

21 **type TA ....**

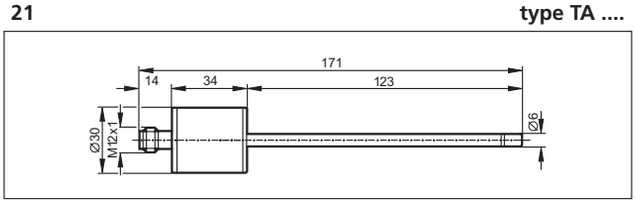

Page 145, 151

Visit our website: www.ifm-electronic.com

Temperature sensors and transmitters

22 **type TM ....**

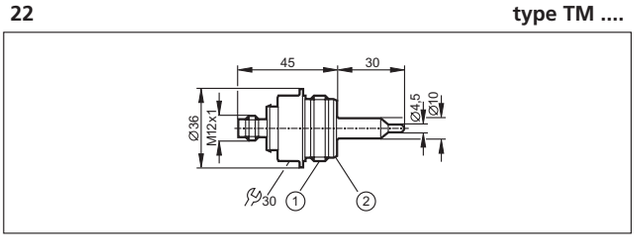

1: Aseptoflex thread, 2: Aseptoflex sealing edge, Page 147

23 **type TM ....**

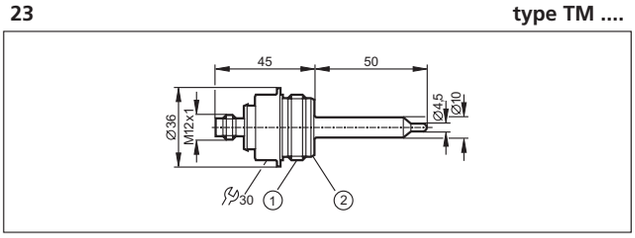

1: Aseptoflex thread, 2: Aseptoflex sealing edge, Page 147

24 **type TM ....**

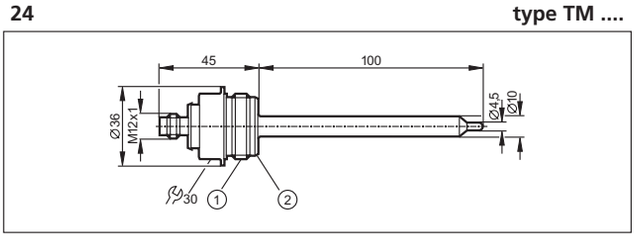

1: Aseptoflex thread, 2: Aseptoflex sealing edge, Page 147

25 **type TA ....**

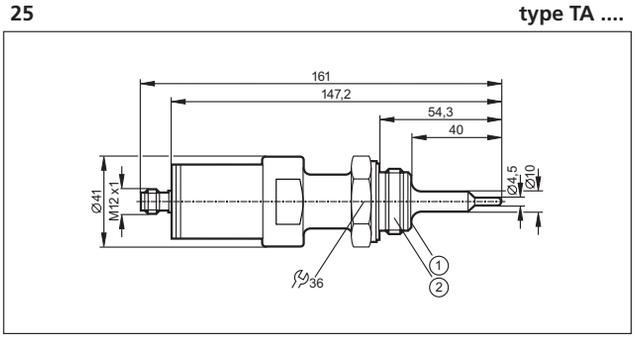

1: sealing chamfer, 2: Aseptoflex thread, Page 153

26 **type TA ....**

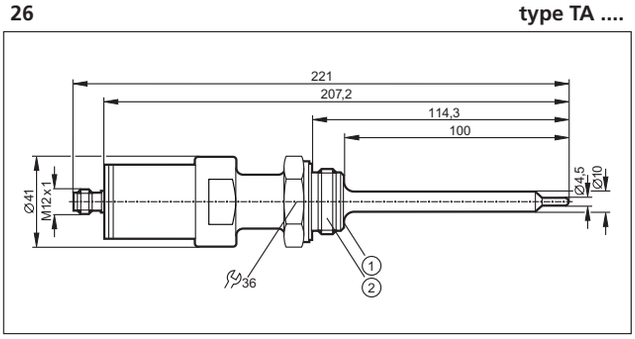

1: sealing chamfer, 2: Aseptoflex thread, Page 153

27 **type TA ....**

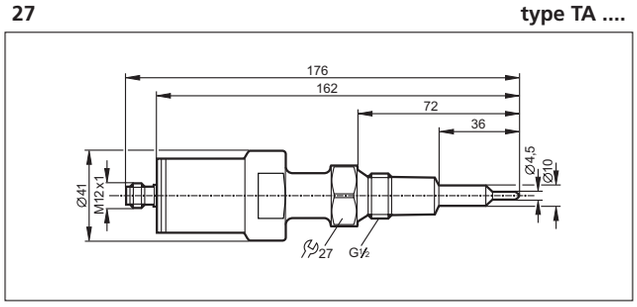

Page 153

28 **type TA ....**

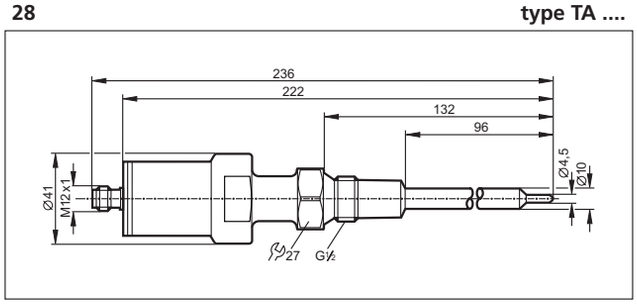

Page 153

Systems for vibration diagnosis

1 **type VB, VE ....**

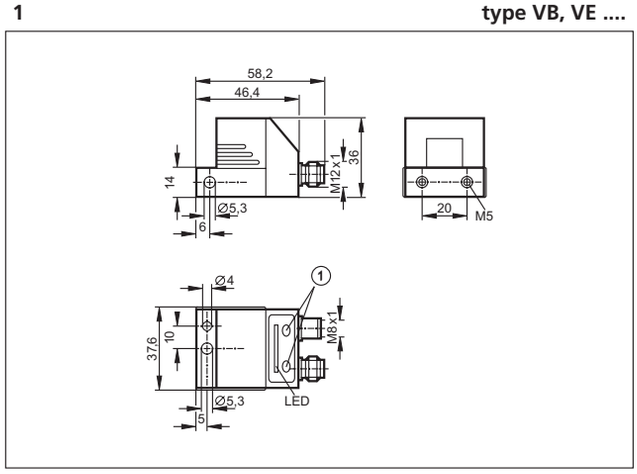

1: Programming buttons, Page 163

2 **type VE ....**

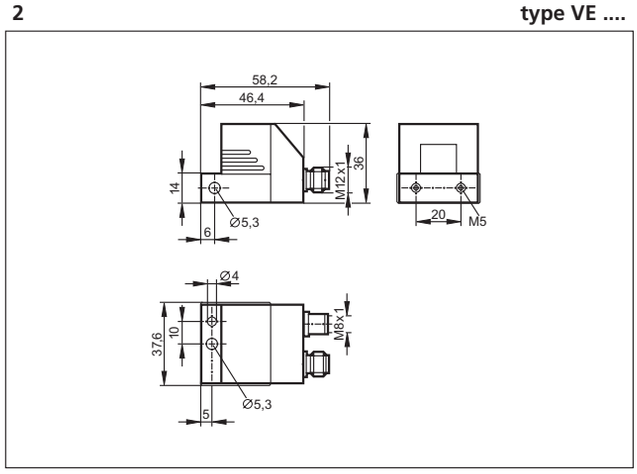

Page 163

3 **type VE ....**

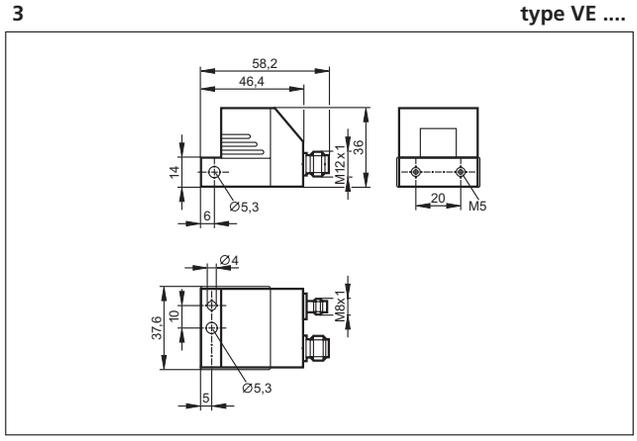

Page 165, 171

4 **type VS ....**

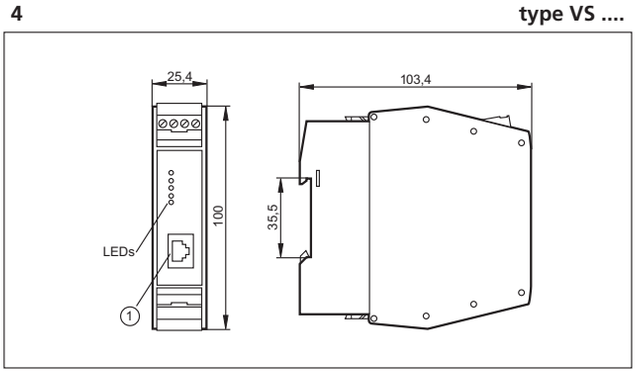

1: Ethernet interface, Page 167

5 **type VS ....**

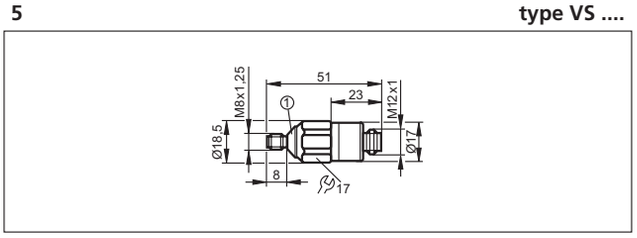

1: Conical angle = 90°, Page 169

Visit our website: www.ifm-electronic.com

Amplifiers

1 **type ....**

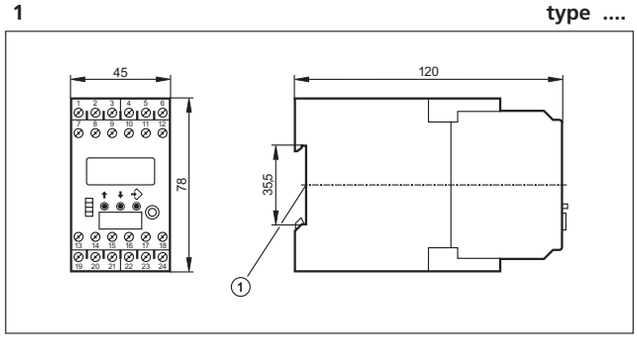

1: mounting on DIN rail, Page 183

2 **type ....**

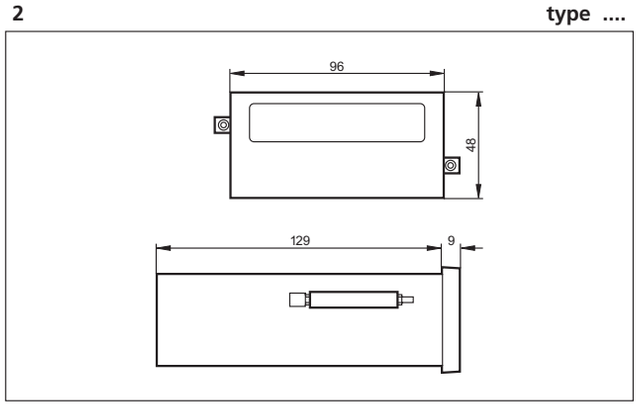

Page 185

3 **type E8 ....**

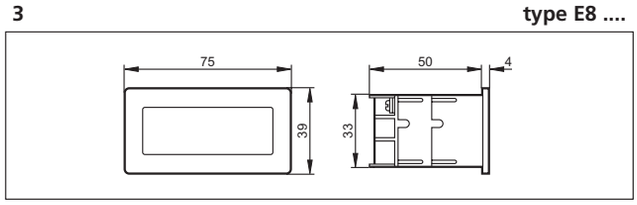

control panel cutout: 68 x 33 mm (according to DIN), Page 185

Transformer and switched-mode power supplies

1 **Typ ....**

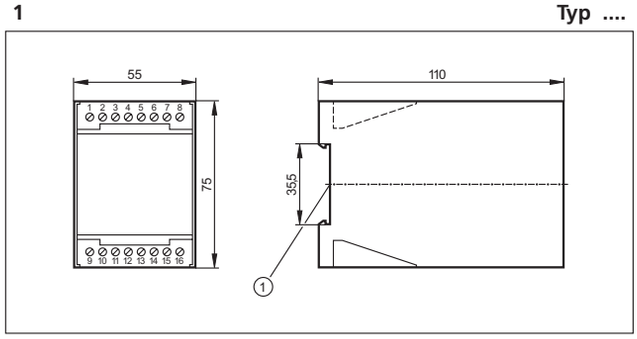

1: mounting on DIN rail, Page 165

2 **Typ ....**

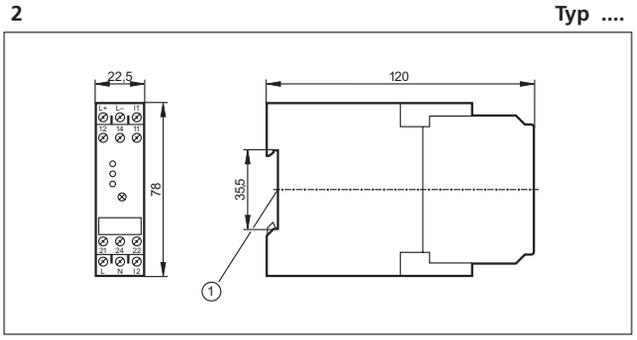

1: mounting on DIN rail, Page 165

3 **Typ DN ....**

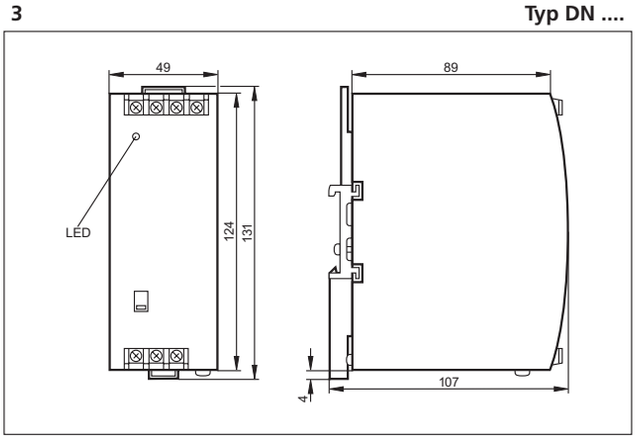

Page 167

4 **Typ DN ....**

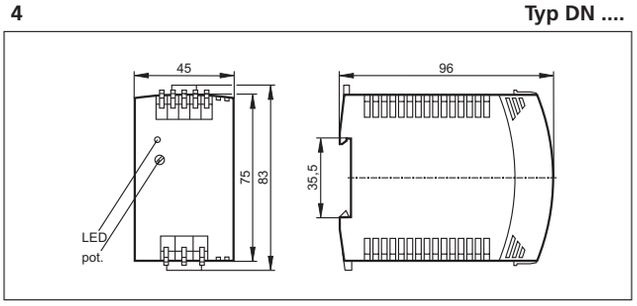

Page 167

5 **Typ ....**

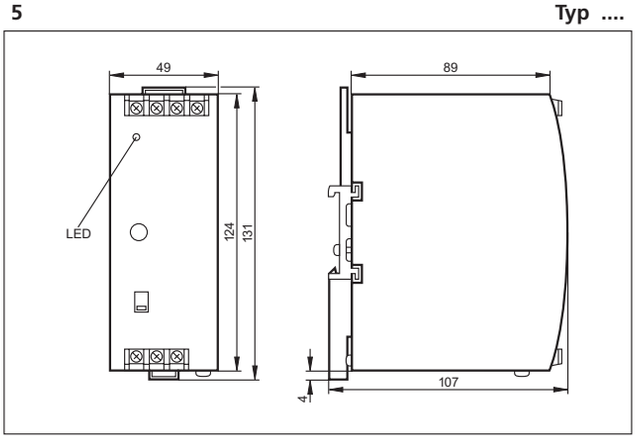

Page 167

Visit our website: www.ifm-electronic.com

Transformer and switched-mode power supplies

6 **Typ DN ....**

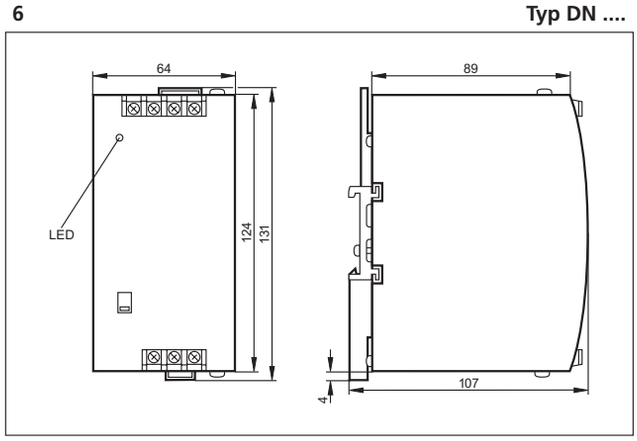

Page 167

7 **Typ ....**

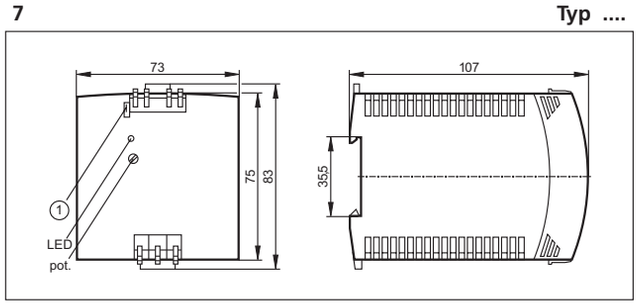

1: jumper “single / parallel operation”, Page 167

8 **Typ DN ....**

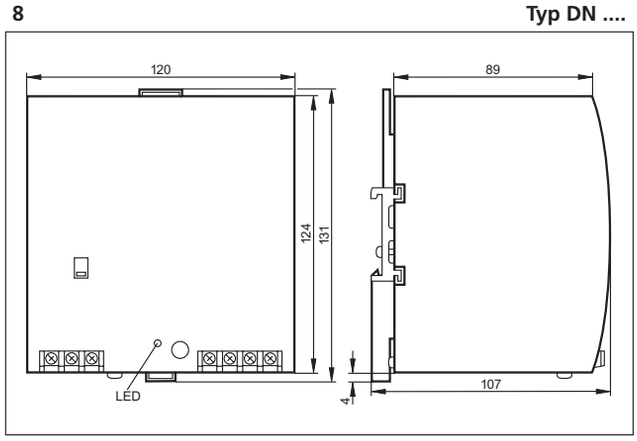

Page 167

9 **Typ ....**

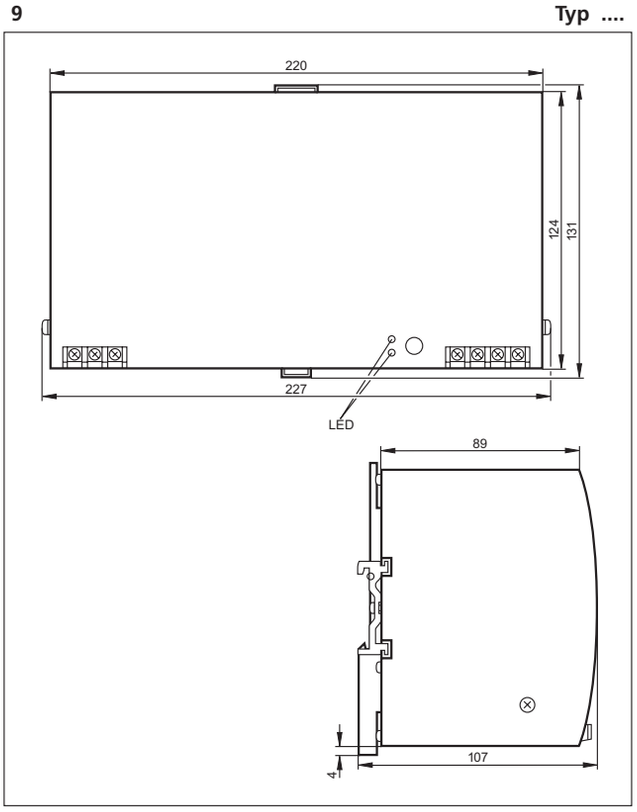

Page 167

10 **Typ DN ....**

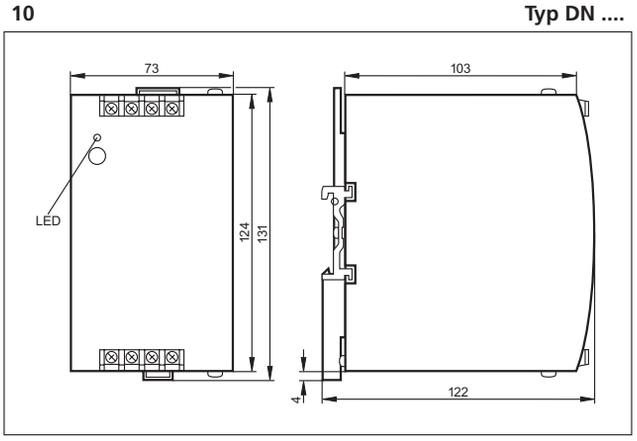

Page 167

Transformer and switched-mode power supplies

11 **Typ DN ....**

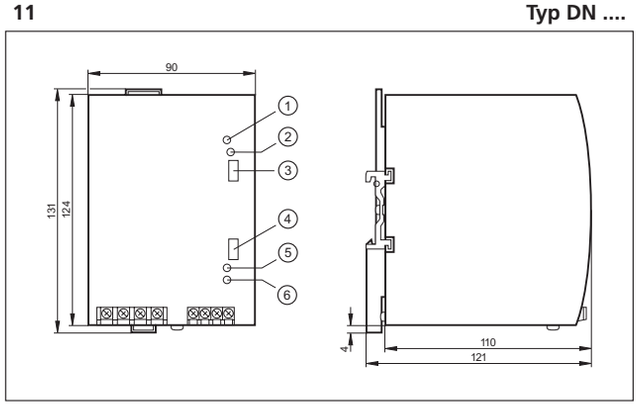

1: LED red, 2: reset push button, 3: jumper “overload performance”, 4: jumper “single / parallel operation”, 5: with pot., 6: LED green,
Page 167

12 **Typ ....**

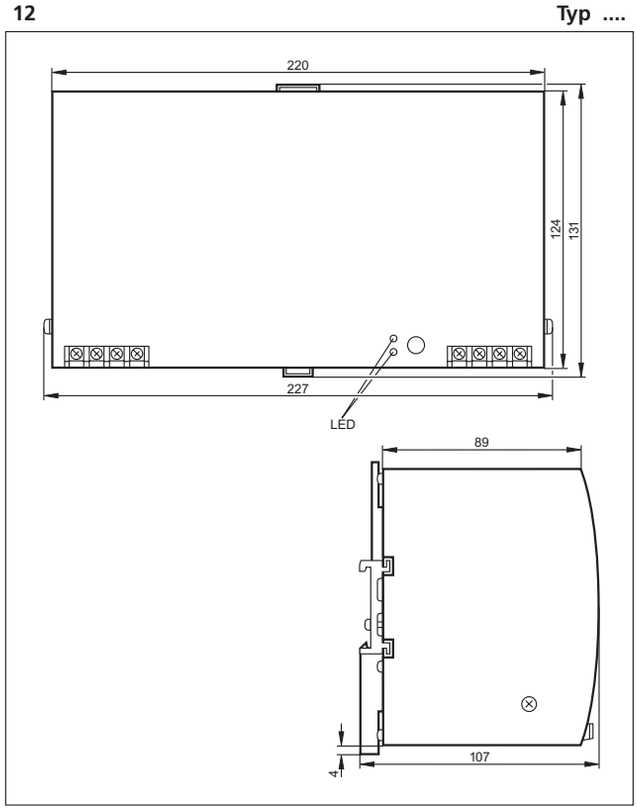

Page 167

13 **Typ ....**

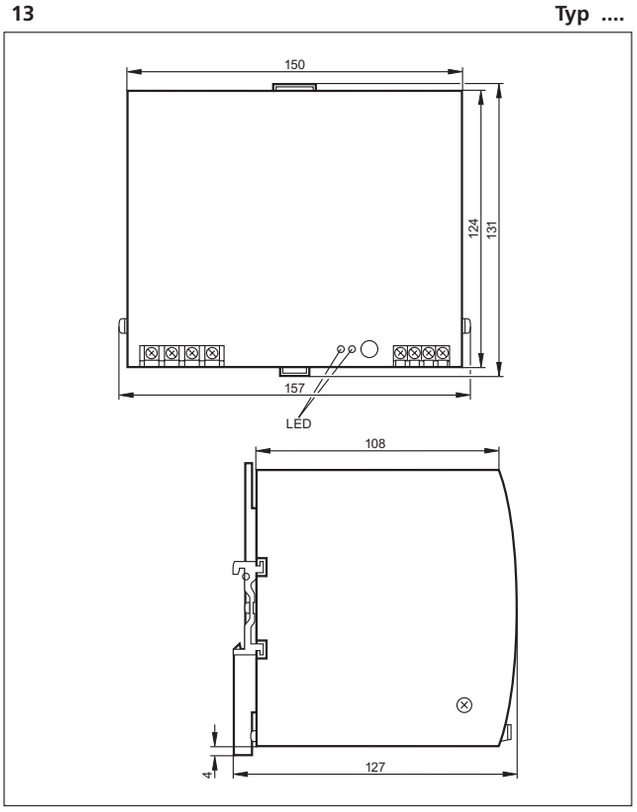

Page 167

14 **Typ ....**

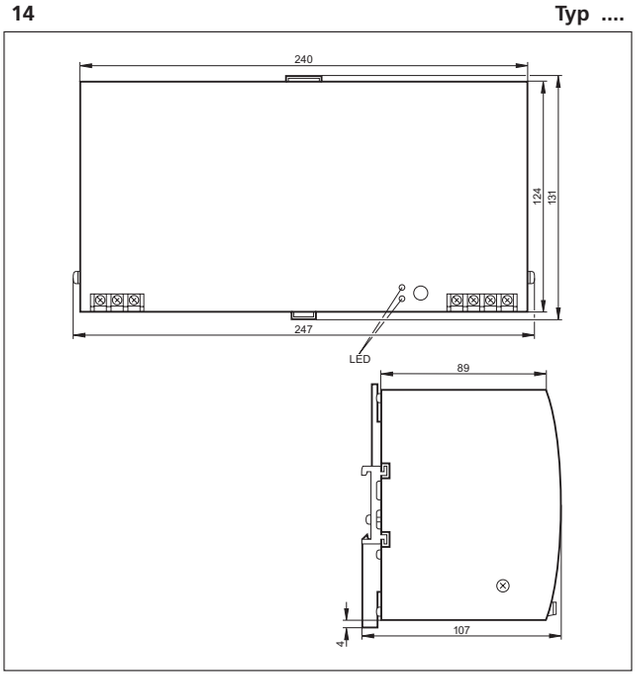

Page 167

Visit our website: www.ifm-electronic.com

Transformer and switched-mode power supplies

15 **Typ ....**

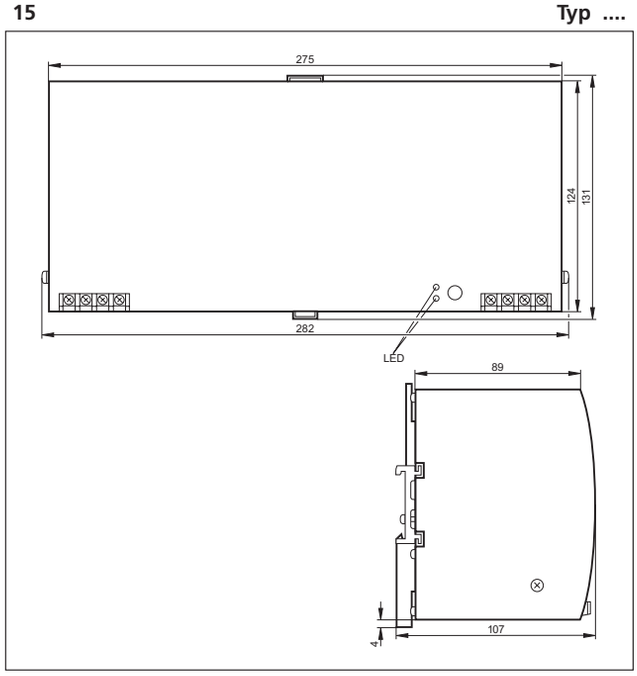

Page 167

Complete ifm product range

1 **Typ E1 ....**

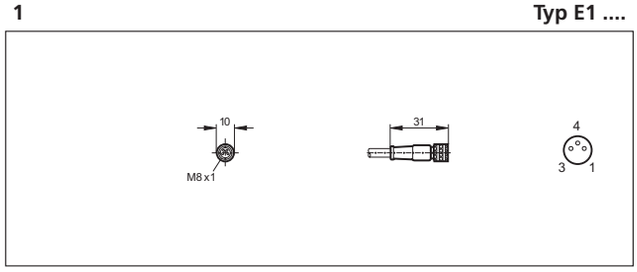

Page 198

2 **Typ E1 ....**

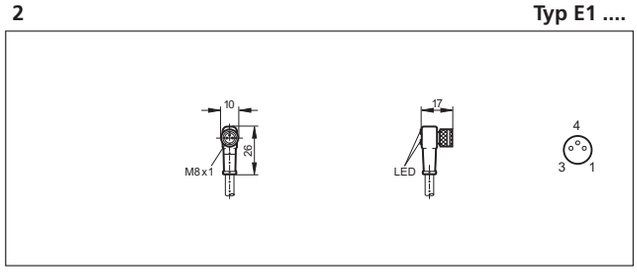

Page 198

3 **Typ E1 ....**

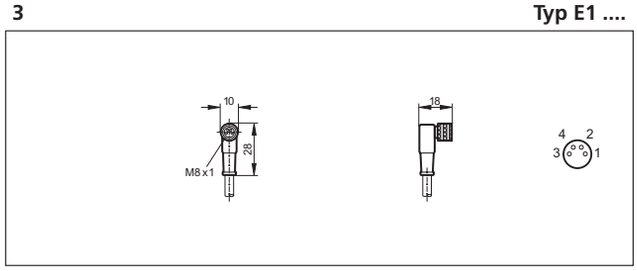

Page 198

4 **Typ E1 ....**

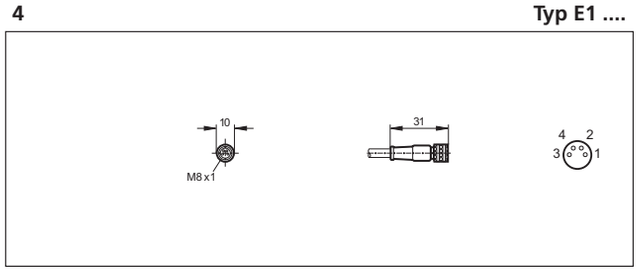

Page 198

5 **Typ AC, E7 ....**

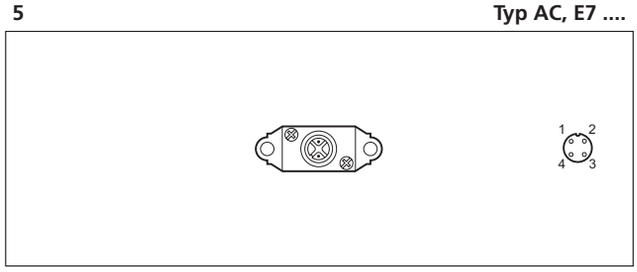

Page 198

6 **Typ E1, E4 ....**

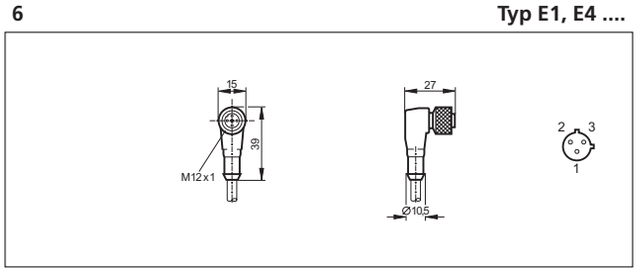

Page 198, 215

7 **Typ E1 ....**

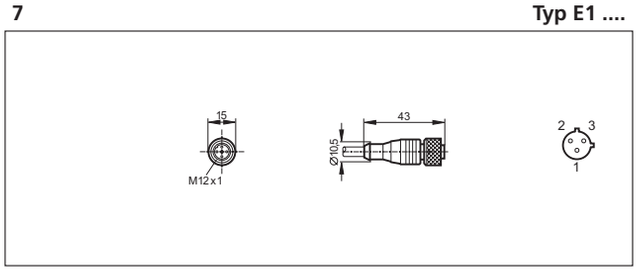

Page 198, 215

8 **Typ E1, E4 ....**

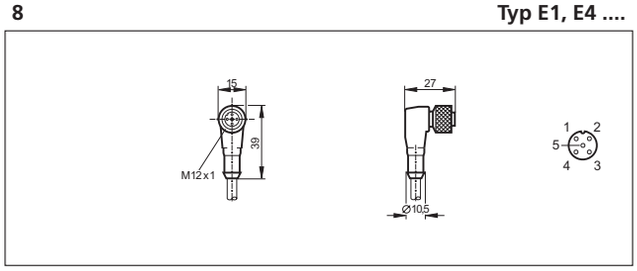

Page 198, 215

9 **Typ E1 ....**

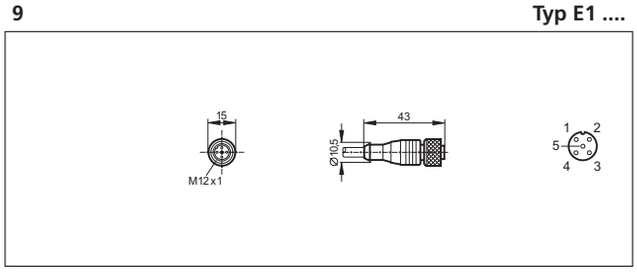

Page 198, 215

10 **Typ EV ....**

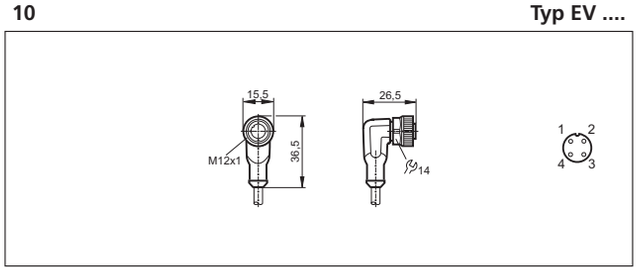

Page 198, 211

Visit our website: www.ifm-electronic.com

Complete ifm product range

11 **Typ EV ....**

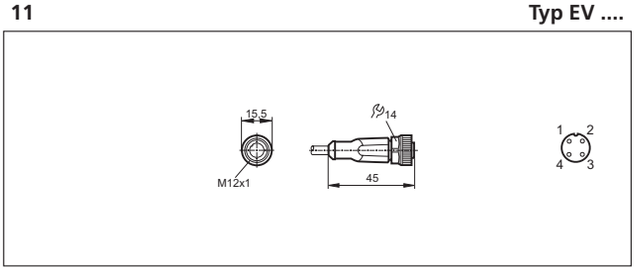

Page 198, 211

12 **Typ E1 ....**

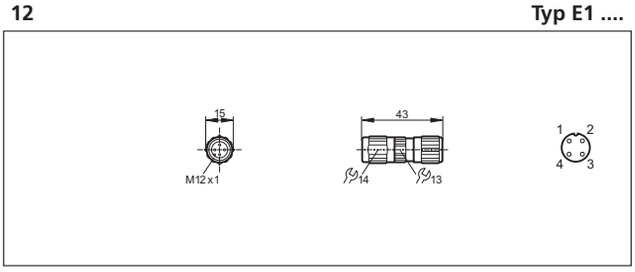

Page 198

13 **Typ E1 ....**

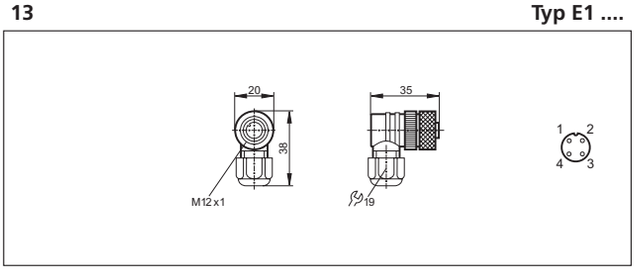

Page 198

14 **Typ E1 ....**

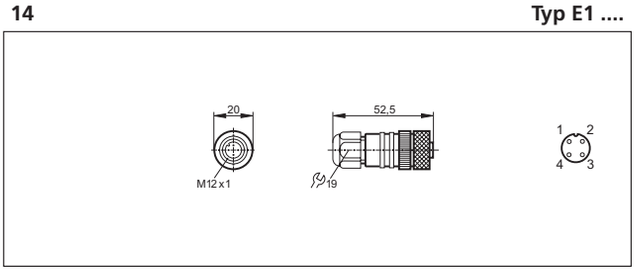

Page 198

15 **Typ EV ....**

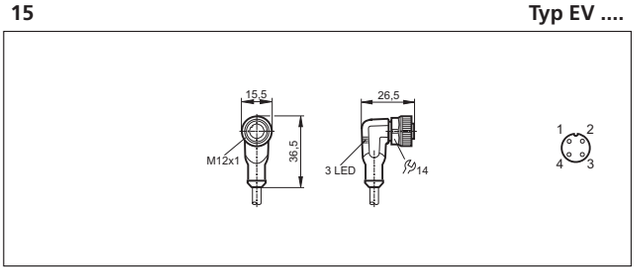

Page 198, 211

16 **Typ E1 ....**

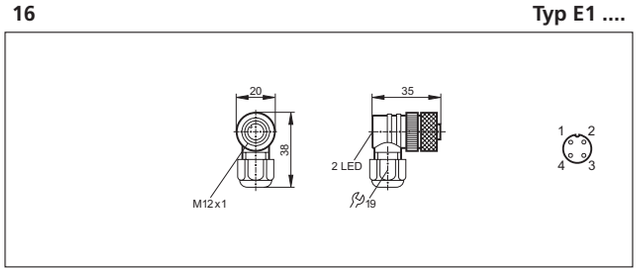

Page 198

17 **Typ E1 ....**

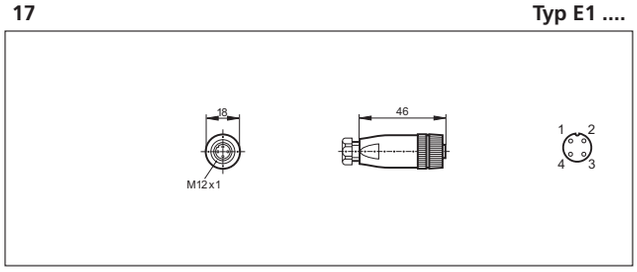

Page 198

18 **Typ EV ....**

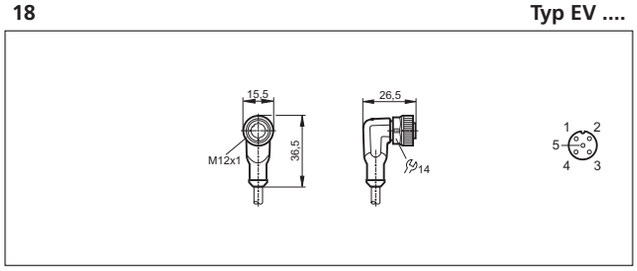

Page 198, 211

19 **Typ EV ....**

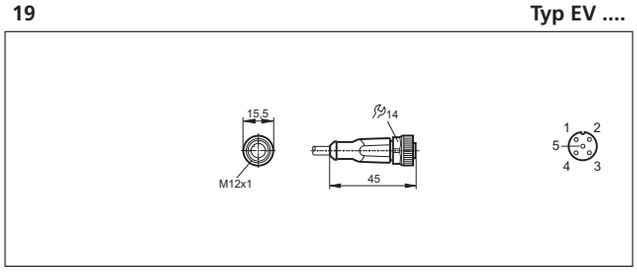

Page 198, 211

20 **Typ E1, E2, E8 ....**

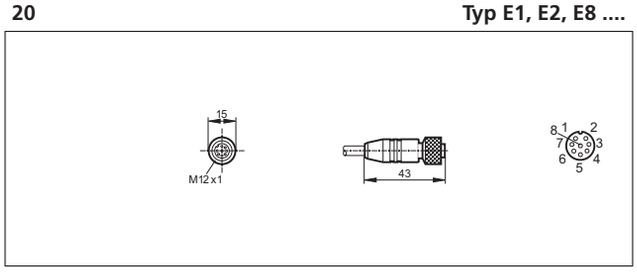

Page 198

Visit our website: www.ifm-electronic.com

Complete ifm product range

21 **Typ E1 ....**

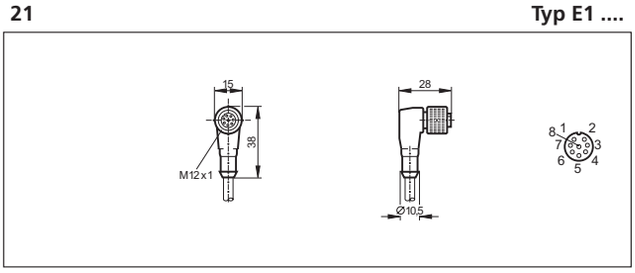

Page 198

22 **Typ E1 ....**

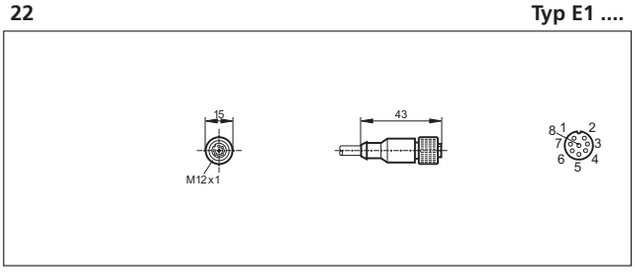

Page 198

23 **Typ E1 ....**

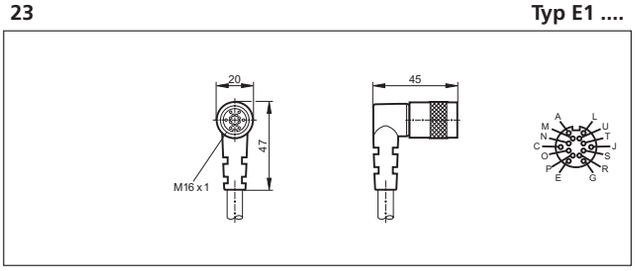

Page 198

24 **Typ E1 ....**

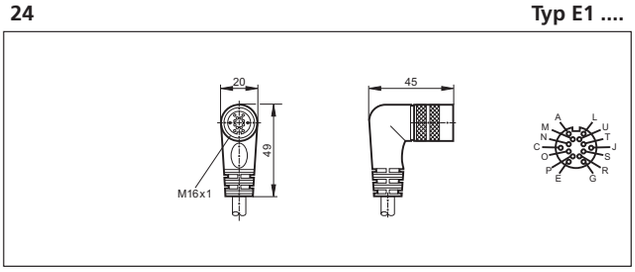

Page 198

25 **Typ E1 ....**

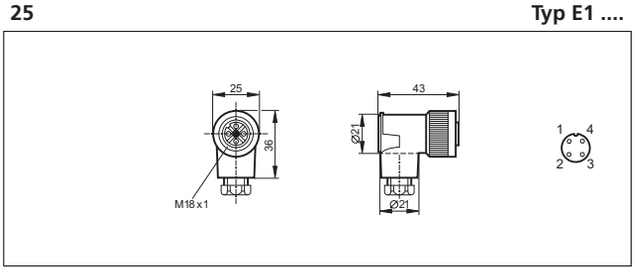

Page 198

26 **Typ E1 ....**

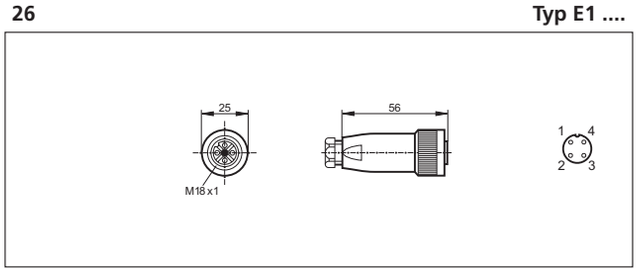

Page 198

27 **Typ E6 ....**

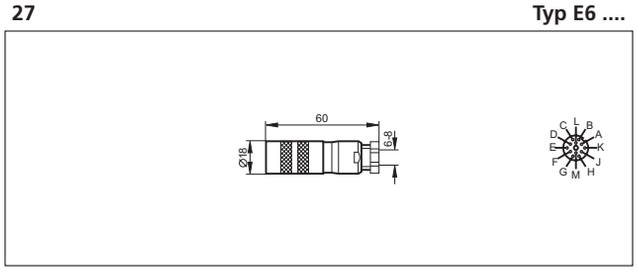

Page 198

28 **Typ E6 ....**

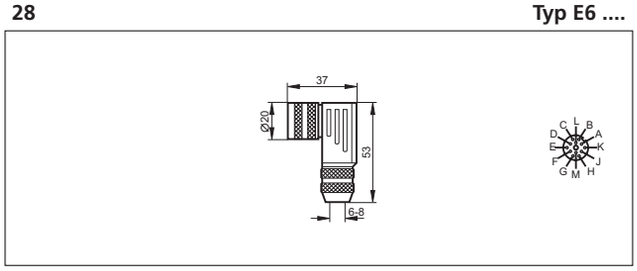

Page 198

29 **Typ E1 ....**

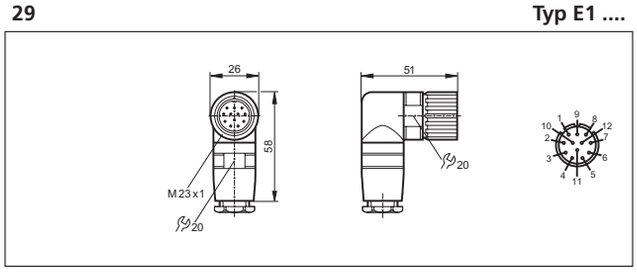

Page 198

30 **Typ E1 ....**

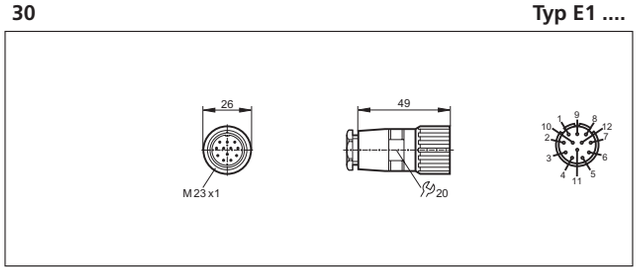

Page 198

Visit our website: www.ifm-electronic.com

Complete ifm product range

31 **Typ E6 ....**

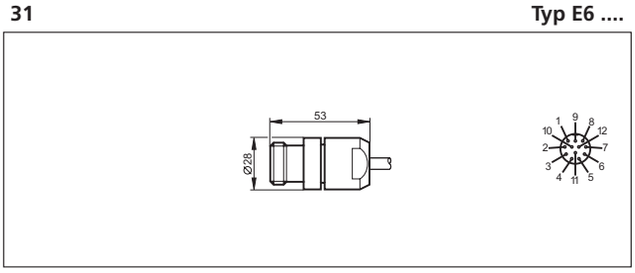

Page 198

32 **Typ E6 ....**

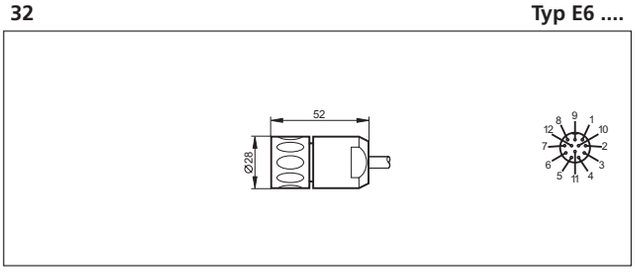

Page 198, 205

33 **Typ E6 ....**

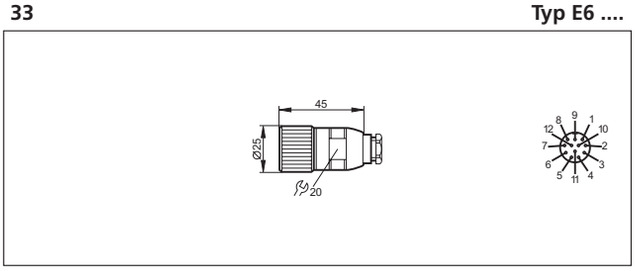

Page 198

34 **Typ E6 ....**

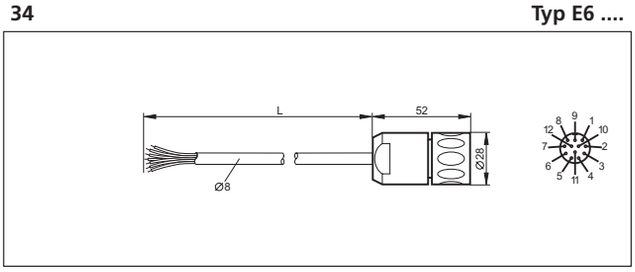

Page 198

35 **Typ E6 ....**

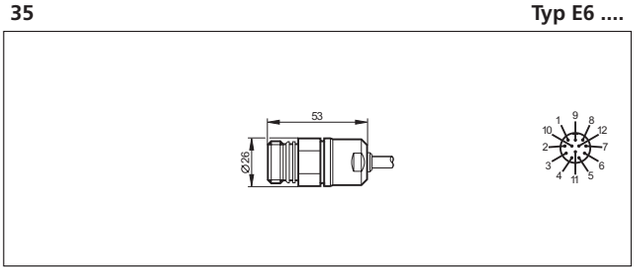

Page 198

36 **Typ E6 ....**

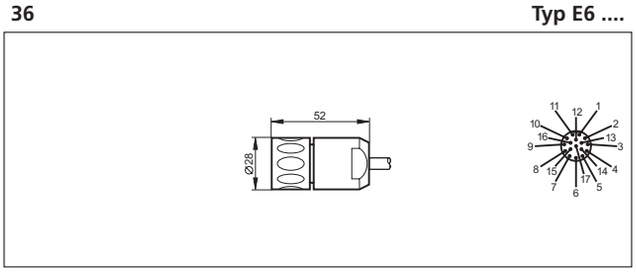

Page 198, 205

37 **Typ E6 ....**

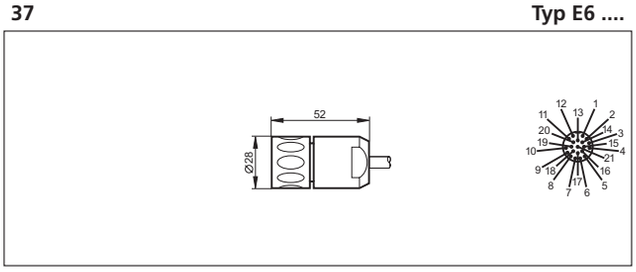

Page 198, 205

38 **Typ E1 ....**

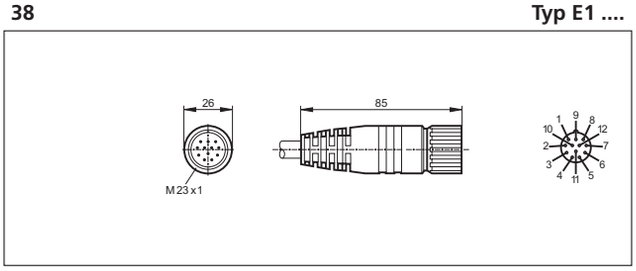

Page 198

39 **Typ E1 ....**

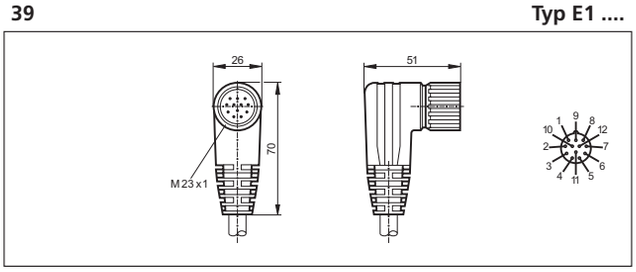

Page 198

40 **Typ E1 ....**

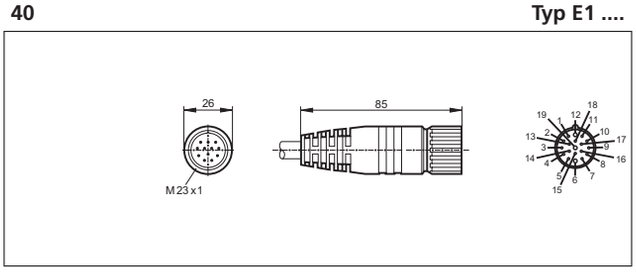

Page 198

Visit our website: www.ifm-electronic.com

Complete ifm product range

41 **Typ E1 ....**

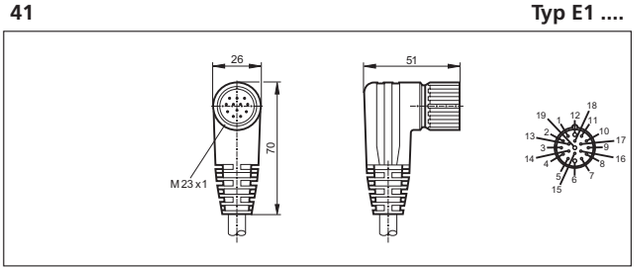

Page 198

46 **Typ E2 ....**

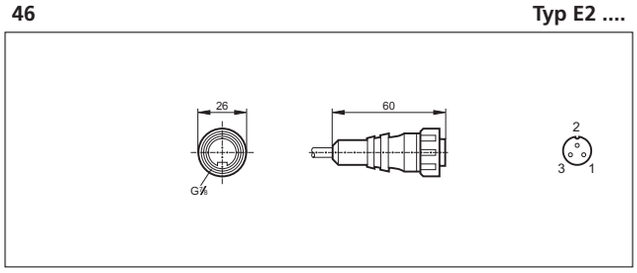

Page 198

42 **Typ E1 ....**

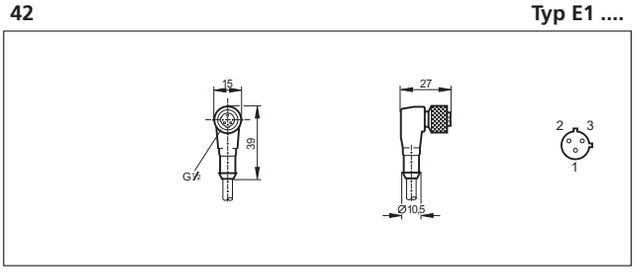

Page 198

47 **Typ E1 ....**

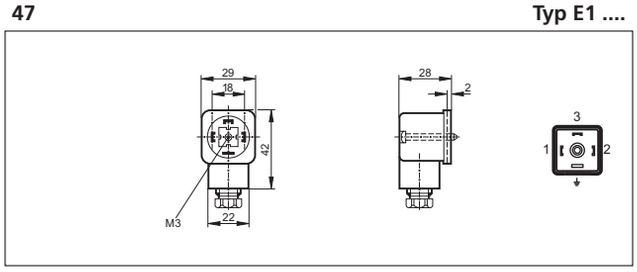

Page 198

43 **Typ E1 ....**

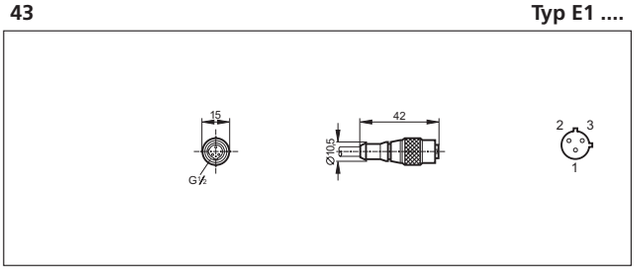

Page 198

48 **Typ E7 ....**

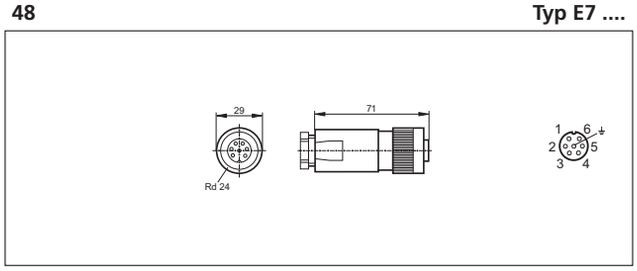

Page 198

44 **Typ E1 ....**

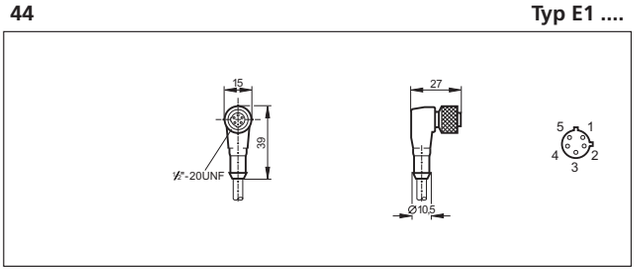

Page 198

49 **Typ E1 ....**

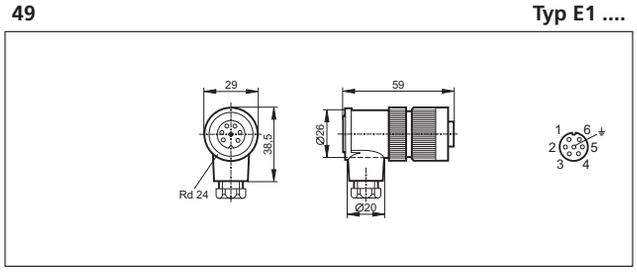

Page 198

45 **Typ E1 ....**

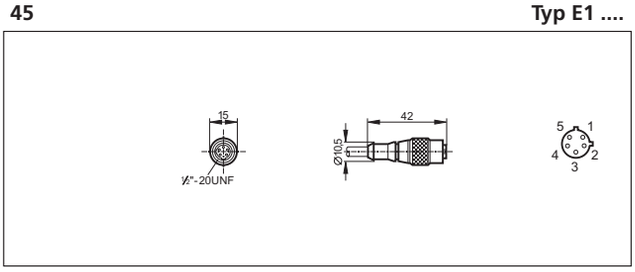

Page 198

50 **Typ E1 ....**

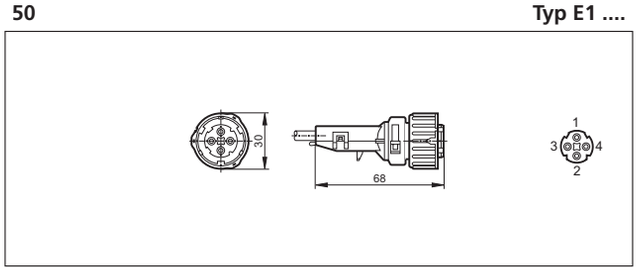

Page 198

Visit our website: www.ifm-electronic.com

Complete ifm product range

51 **Typ E1 ....**

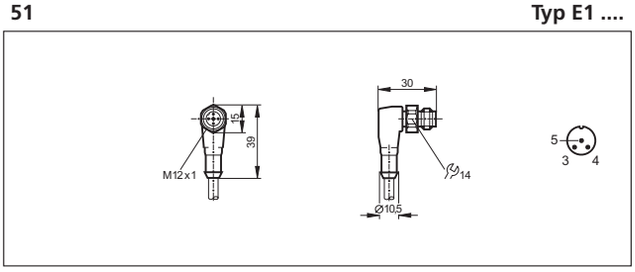

Page 205, 215

52 **Typ E1 ....**

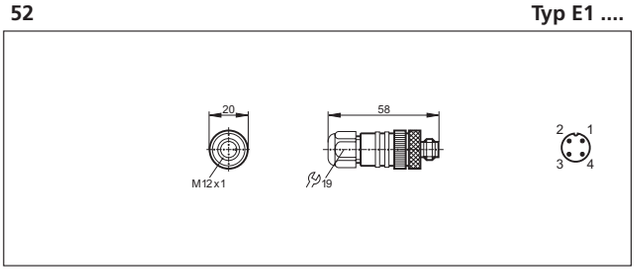

Page 205

53 **Typ E1 ....**

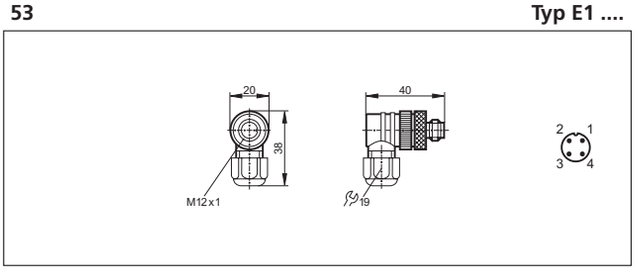

Page 205

54 **Typ E1 ....**

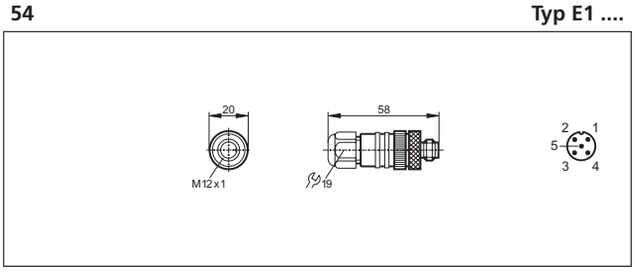

Page 205

55 **Typ E1 ....**

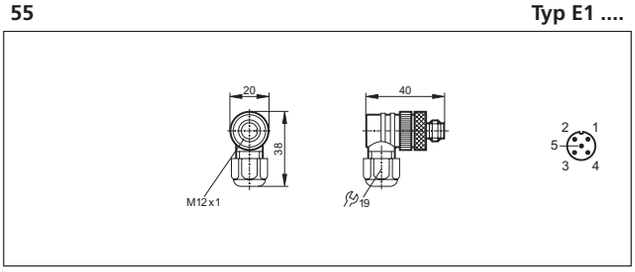

Page 205

56 **Typ E6 ....**

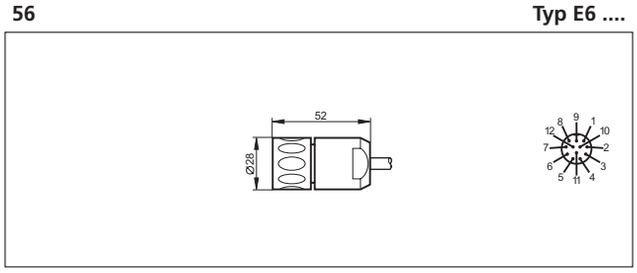

Page 198, 205

57 **Typ E1 ....**

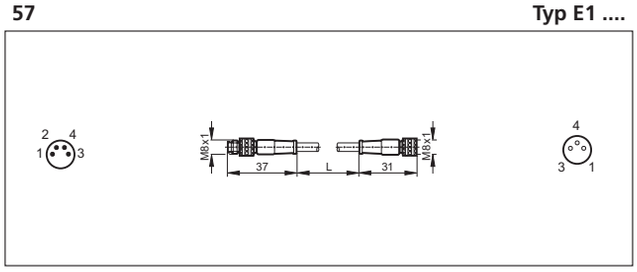

Page 206

58 **Typ E1 ....**

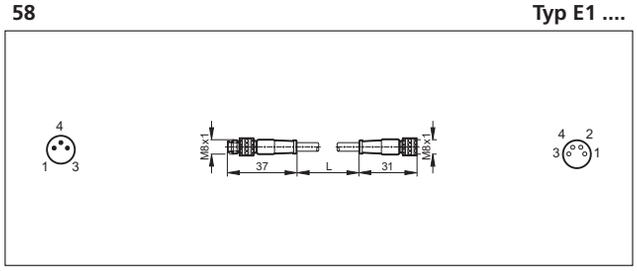

Page 206

59 **Typ E1 ....**

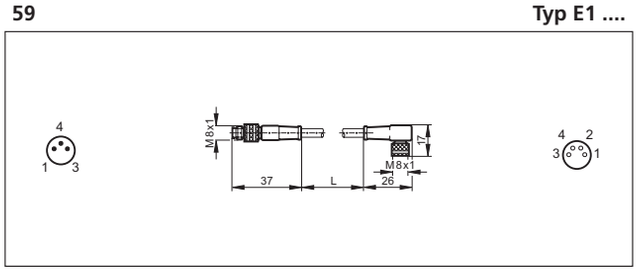

Page 206

60 **Typ E1 ....**

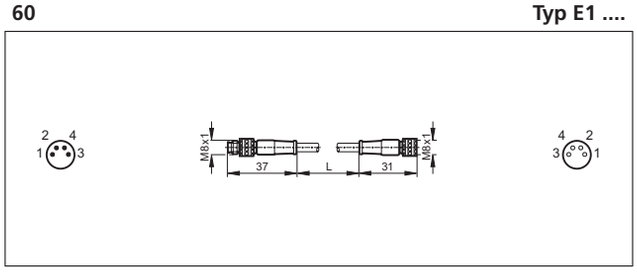

Page 206

Visit our website: www.ifm-electronic.com

Complete ifm product range

61 **Typ E1 ....**

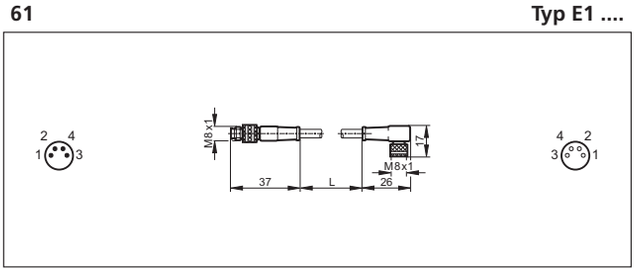

Page 206

62 **Typ E1 ....**

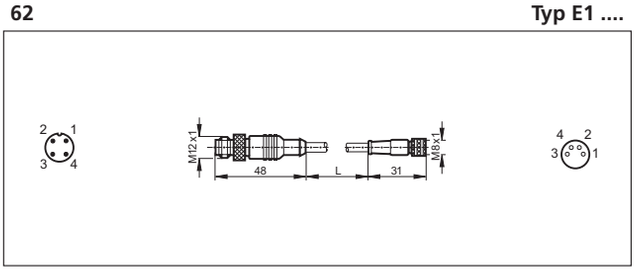

Page 206

63 **Typ E1 ....**

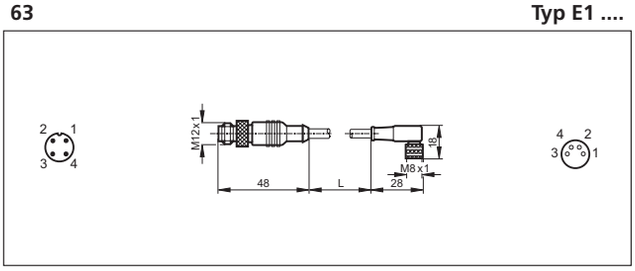

Page 206

64 **Typ EV ....**

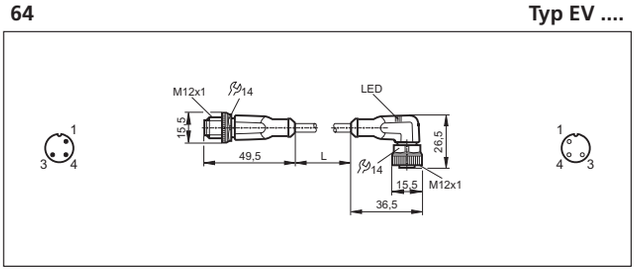

Page 206

65 **Typ EV ....**

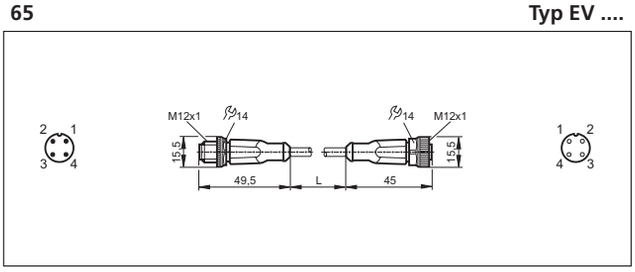

Page 206

66 **Typ EV ....**

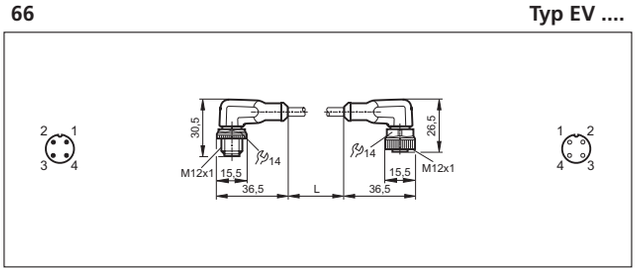

Page 206

67 **Typ E1 ....**

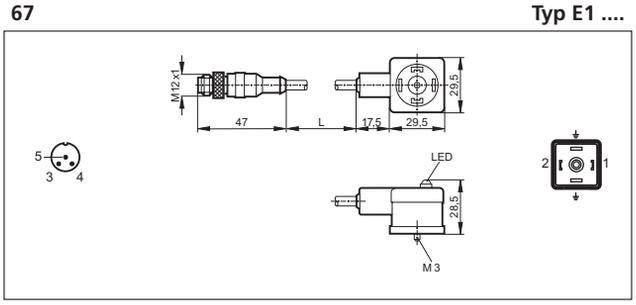

Page 206

68 **Typ E1 ....**

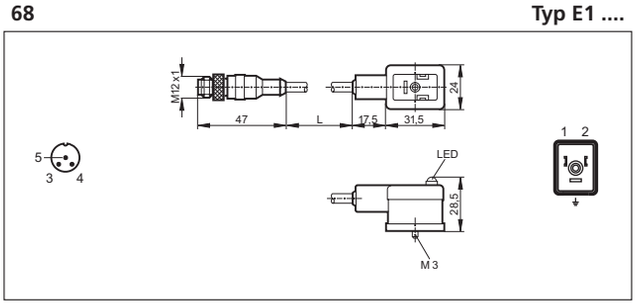

Page 206

69 **Typ E1 ....**

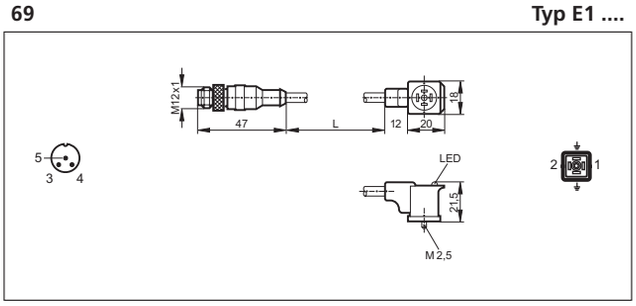

Page 206

70 **Typ E1 ....**

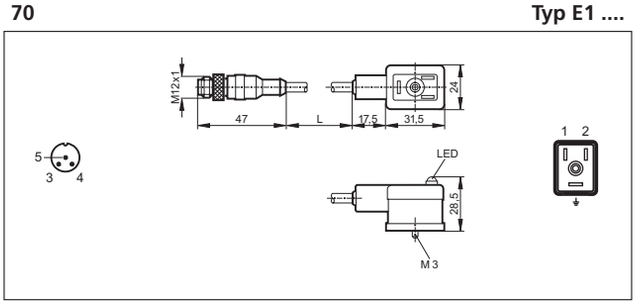

Page 206

Visit our website: www.ifm-electronic.com

Complete ifm product range

71 **Typ E1 ....**

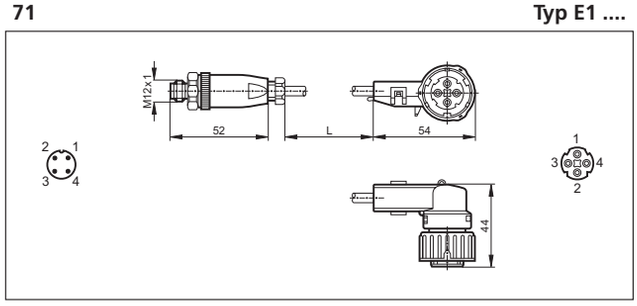

Page 206

72 **Typ E7 ....**

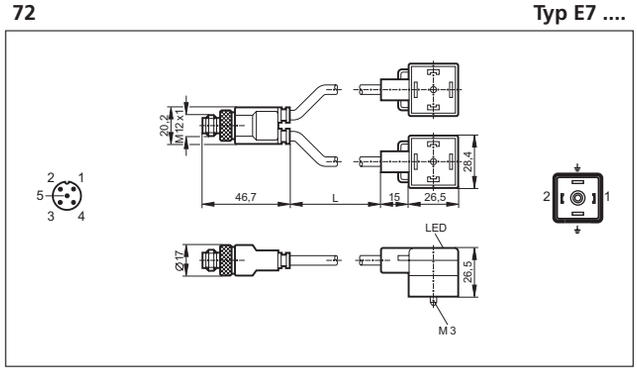

Page 206

73 **Typ E1 ....**

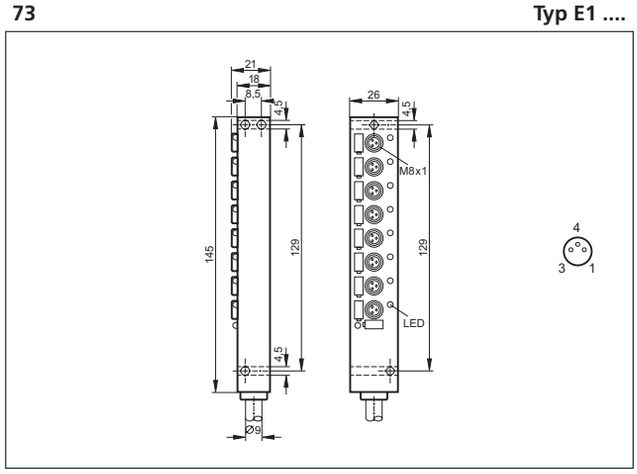

Page 208

74 **Typ E1 ....**

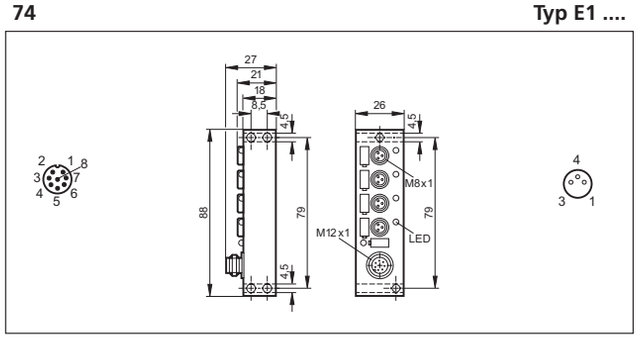

Page 208

75 **Typ E1 ....**

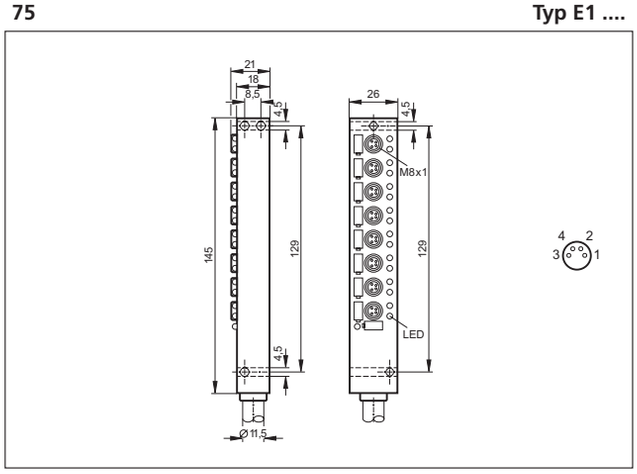

Page 208

76 **Typ E1 ....**

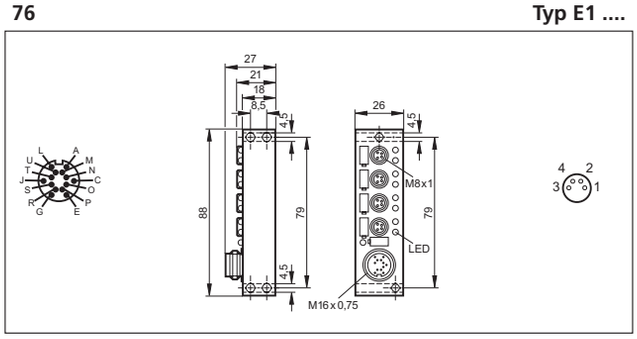

Page 208

77 **Typ E1 ....**

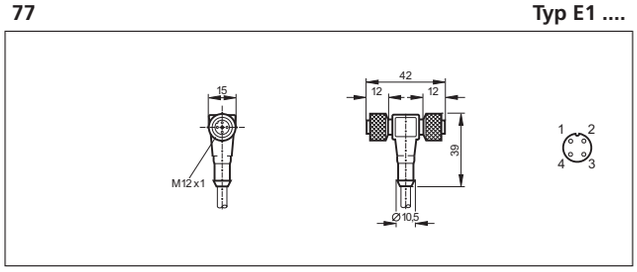

Page 208

78 **Typ E1 ....**

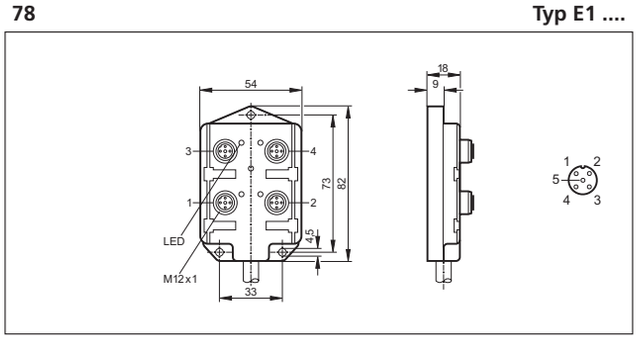

Page 208

Visit our website: www.ifm-electronic.com

Complete ifm product range

79 **Typ E1 ....**

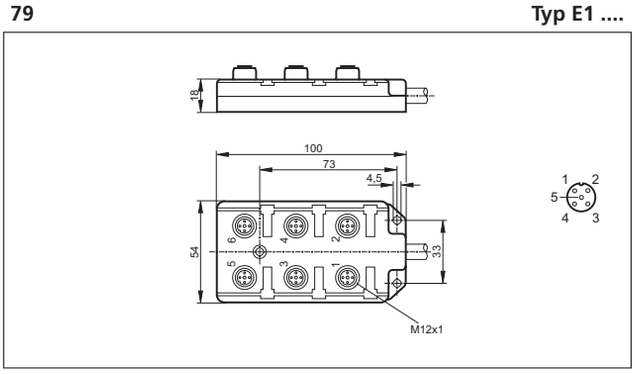

Page 208

80 **Typ E1 ....**

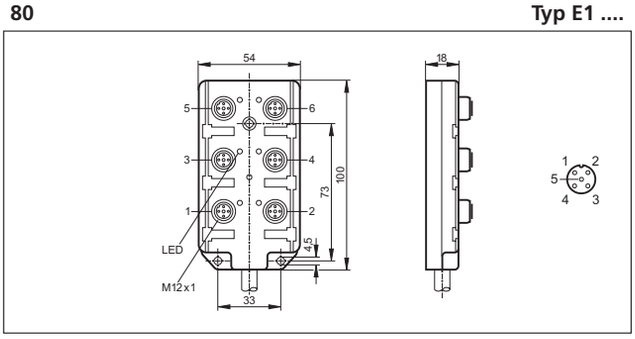

Page 208

81 **Typ E1 ....**

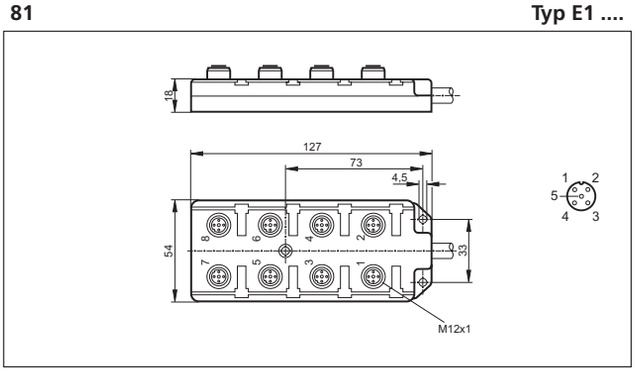

Page 208

82 **Typ E1 ....**

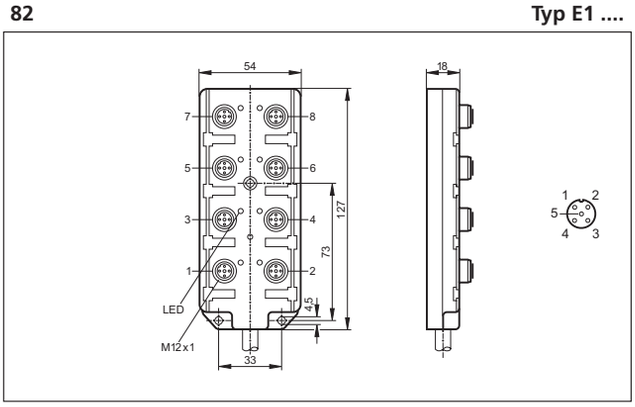

Page 208

83 **Typ E1 ....**

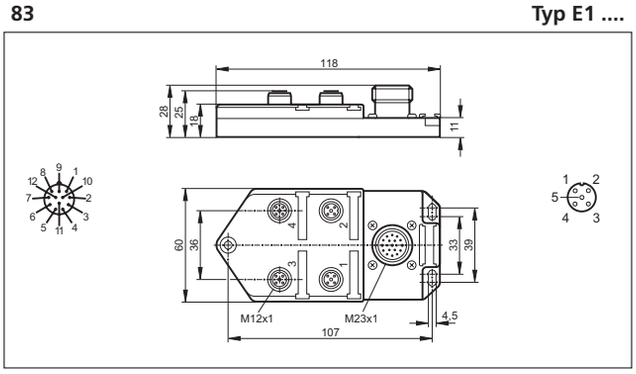

Page 208

84 **Typ E1 ....**

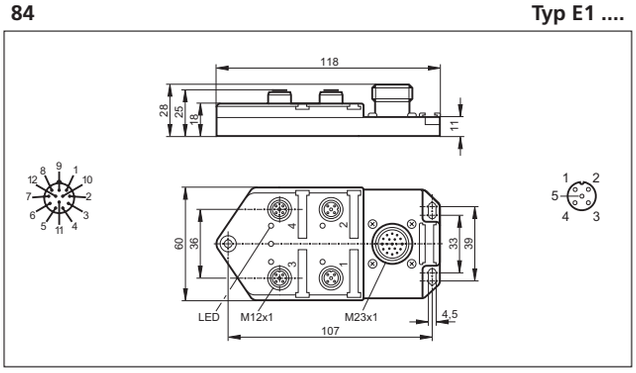

Page 208

85 **Typ E1 ....**

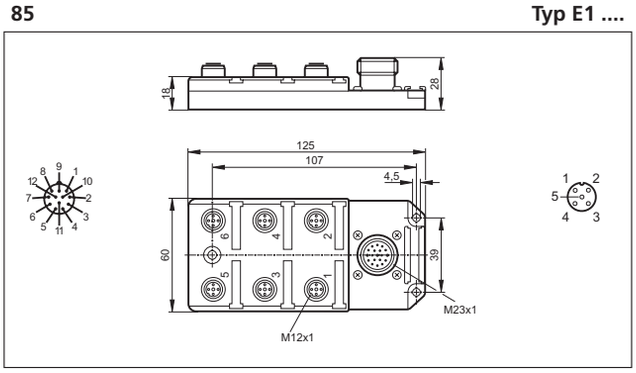

Page 208

86 **Typ E1 ....**

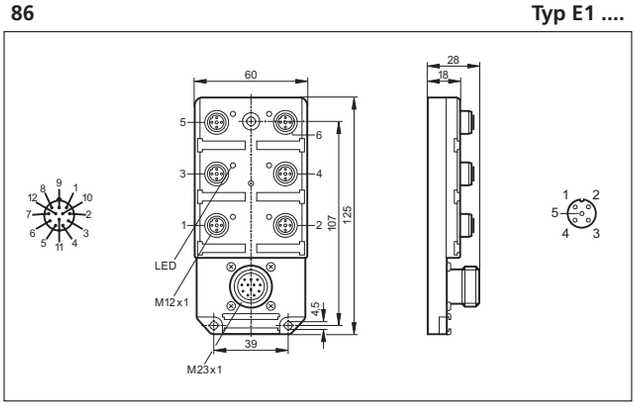

Page 208

Visit our website: www.ifm-electronic.com

Complete ifm product range

87 **Typ E1 ....**

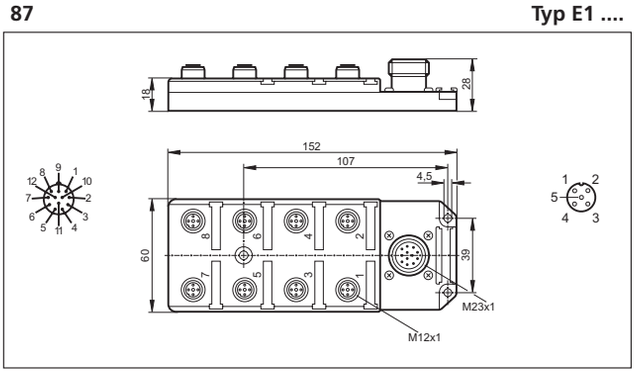

Page 208

88 **Typ E1 ....**

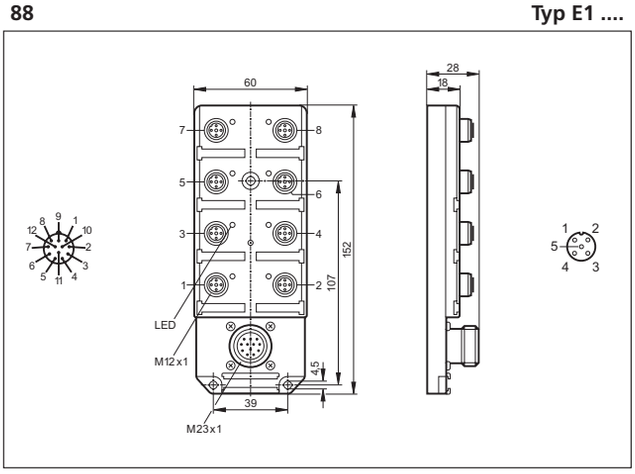

Page 208

89 **Typ E1 ....**

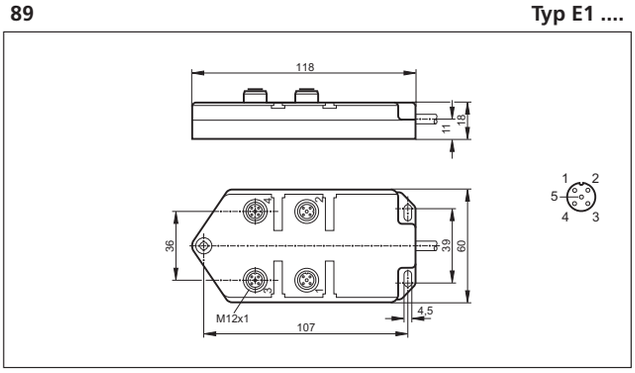

Page 208

90 **Typ E1 ....**

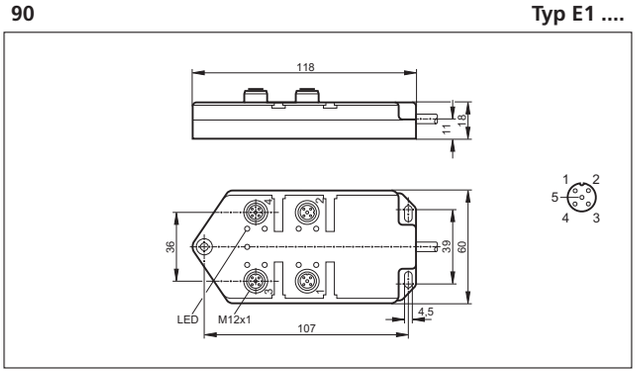

Page 208

91 **Typ E1 ....**

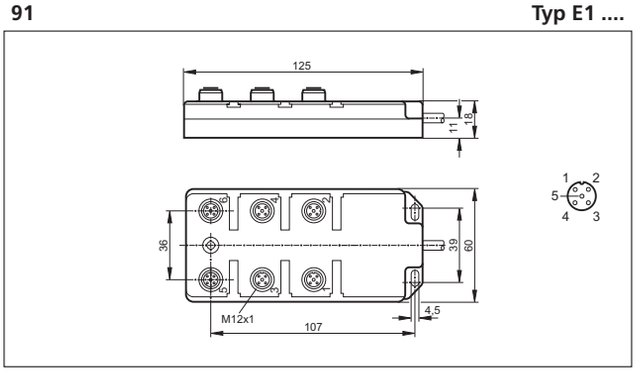

Page 208

92 **Typ E1 ....**

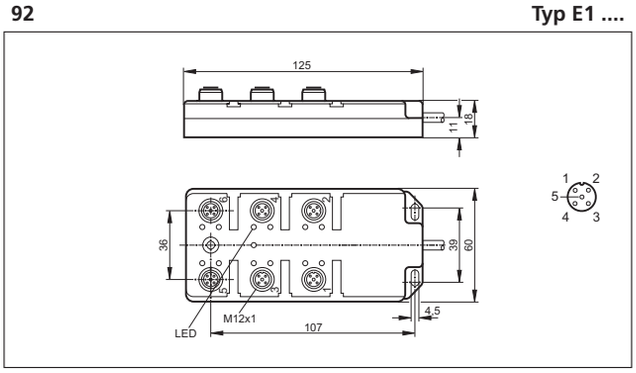

Page 208

93 **Typ E1 ....**

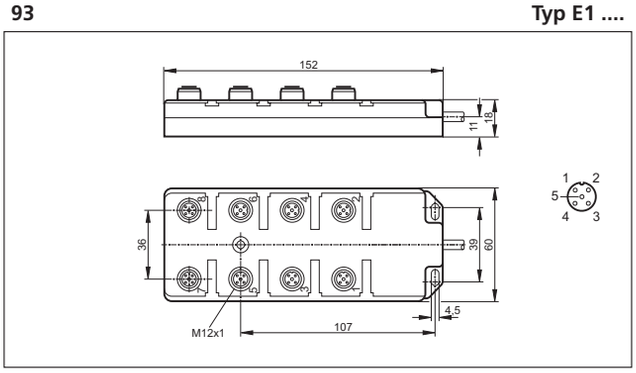

Page 208

Visit our website: www.ifm-electronic.com

Complete ifm product range

94 **Typ E1 ....**

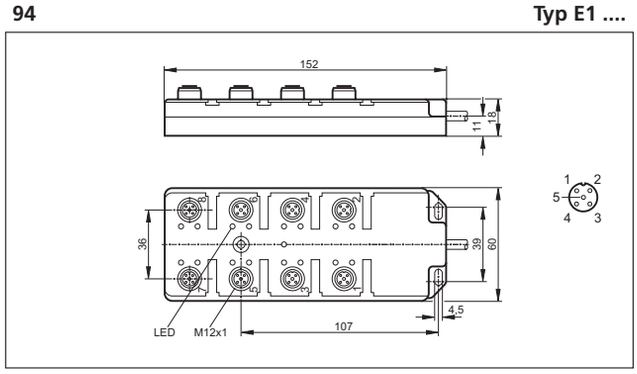

Page 208

95 **Typ E1 ....**

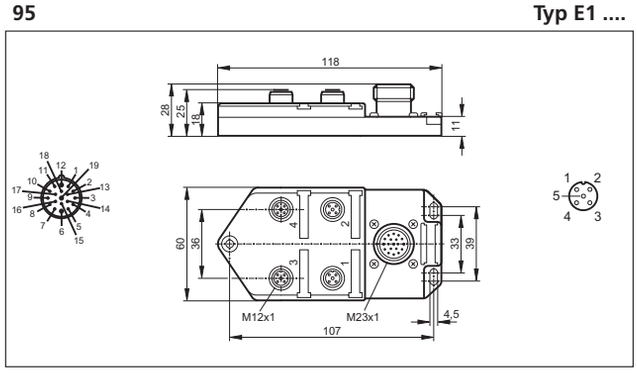

Page 208

96 **Typ E1 ....**

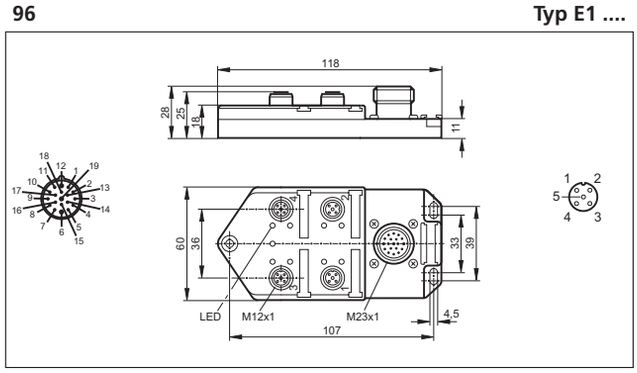

Page 208

97 **Typ E1 ....**

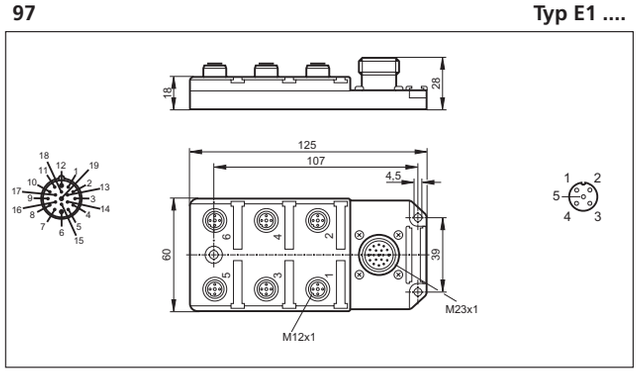

Page 208

98 **Typ E1 ....**

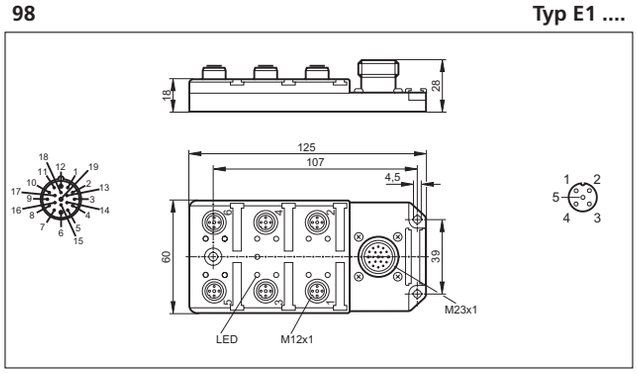

Page 208

99 **Typ E1 ....**

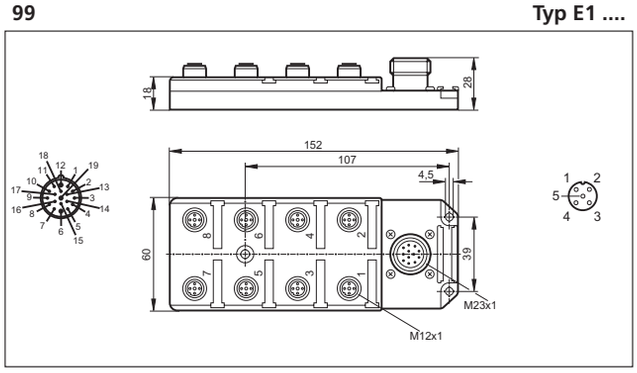

Page 208

100 **Typ E1 ....**

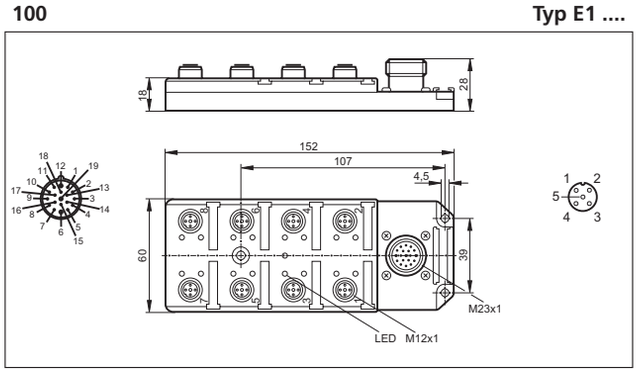

Page 208

101 **Typ E1 ....**

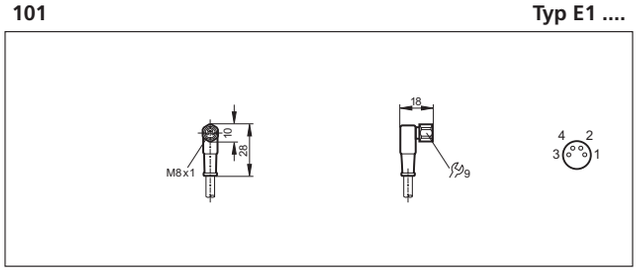

Page 212

Visit our website: www.ifm-electronic.com

Complete ifm product range

102 **Typ E1 ....**

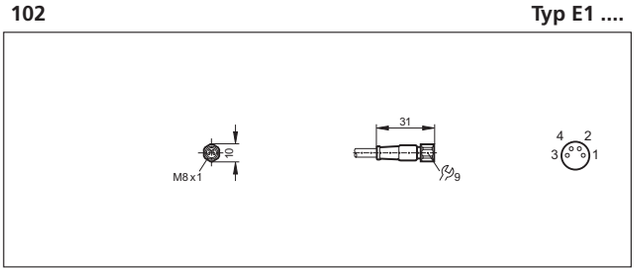

Page 212

103 **Typ EV ....**

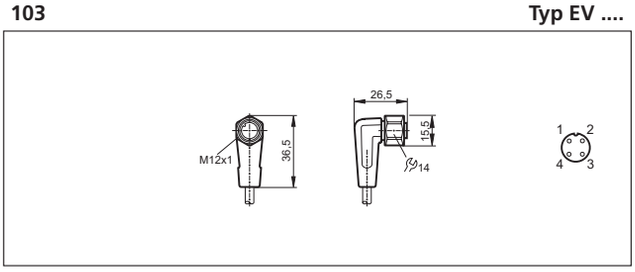

Page 212

104 **Typ EV ....**

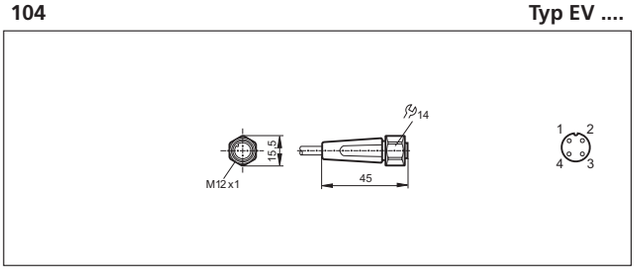

Page 212

105 **Typ E1 ....**

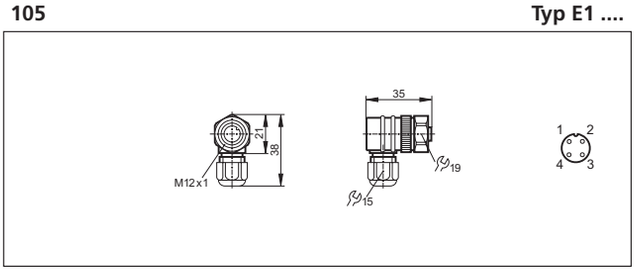

Page 212

106 **Typ E1 ....**

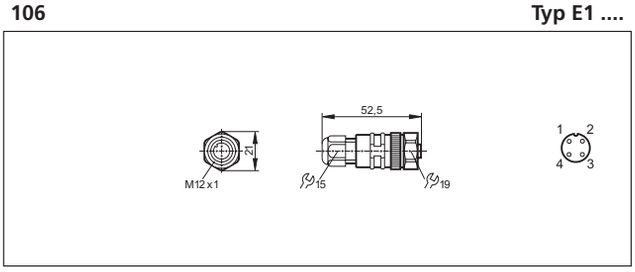

Page 212

107 **Typ EV ....**

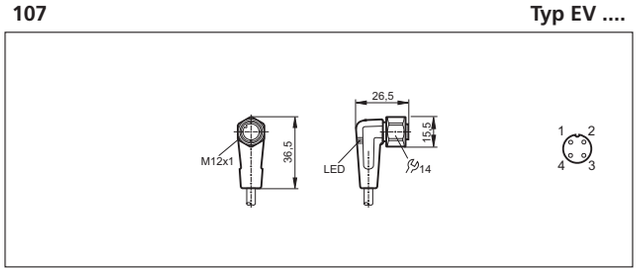

Page 212

108 **Typ EV ....**

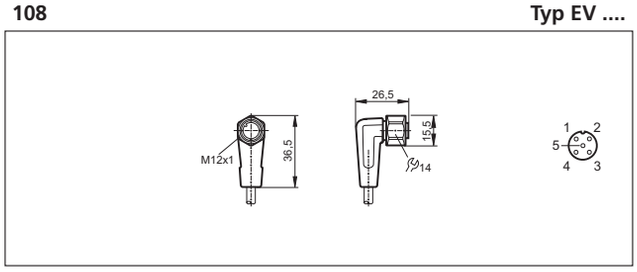

Page 212

109 **Typ EV ....**

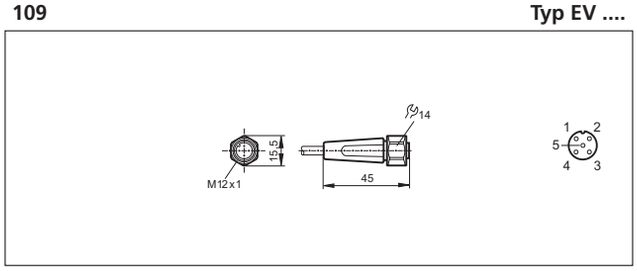

Page 212

110 **Typ E1 ....**

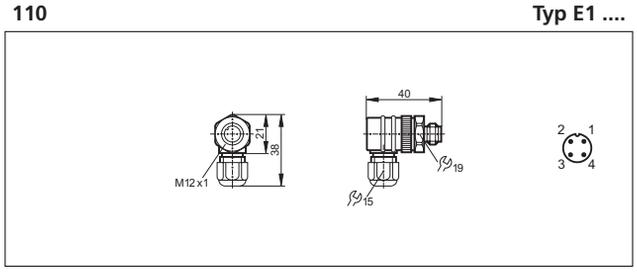

Page 212

111 **Typ E1 ....**

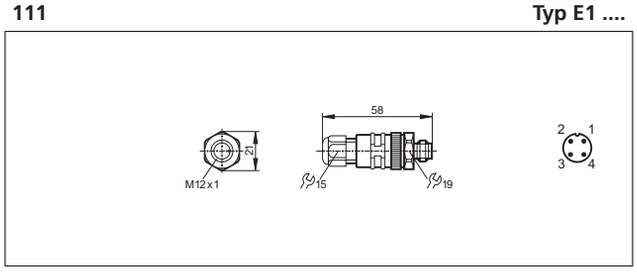

Page 212

Visit our website: www.ifm-electronic.com

Complete ifm product range

112 **Typ EV ....**

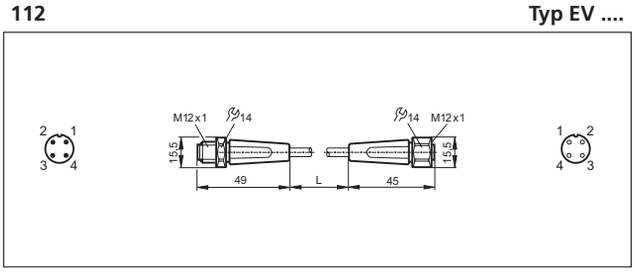

Page 212

113 **Typ E1 ....**

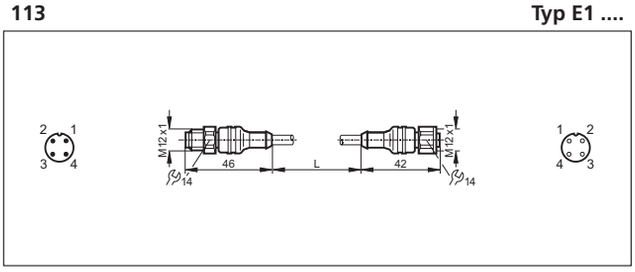

Page 212

114 **Typ E1 ....**

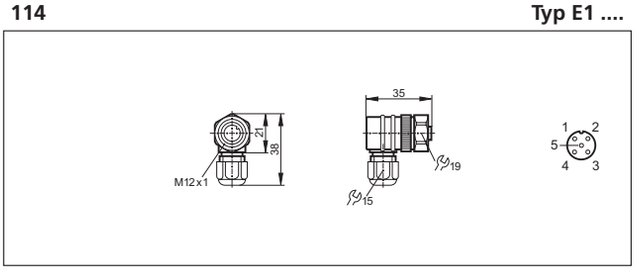

Page 212

115 **Typ E1 ....**

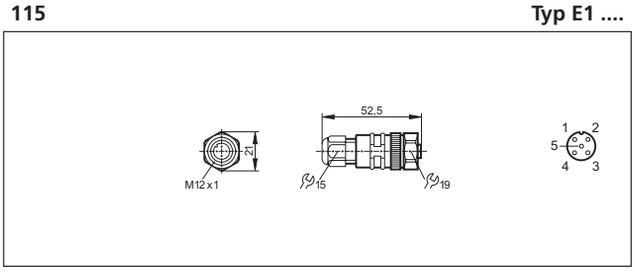

Page 212

116 **Typ E1 ....**

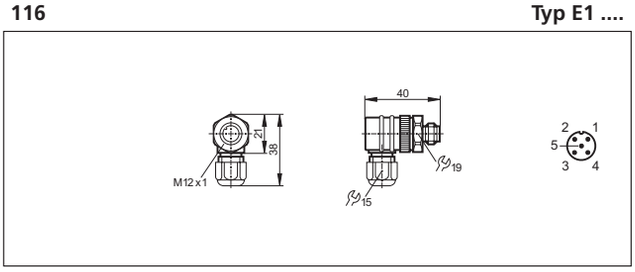

Page 212

117 **Typ E1 ....**

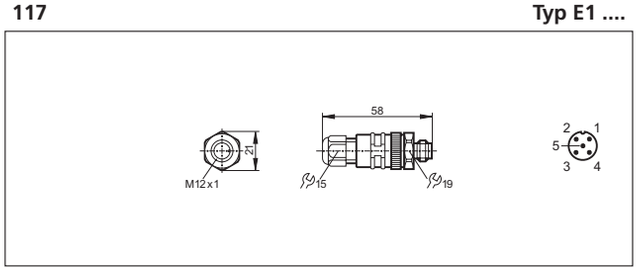

Page 212

118 **Typ E1 ....**

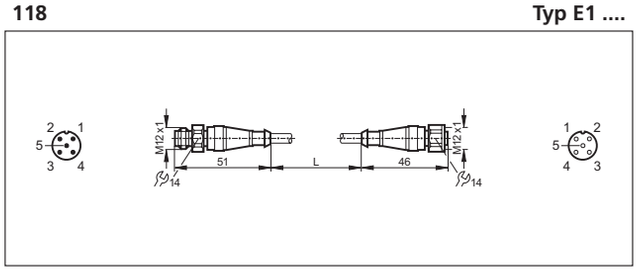

Page 212

119 **Typ ....**

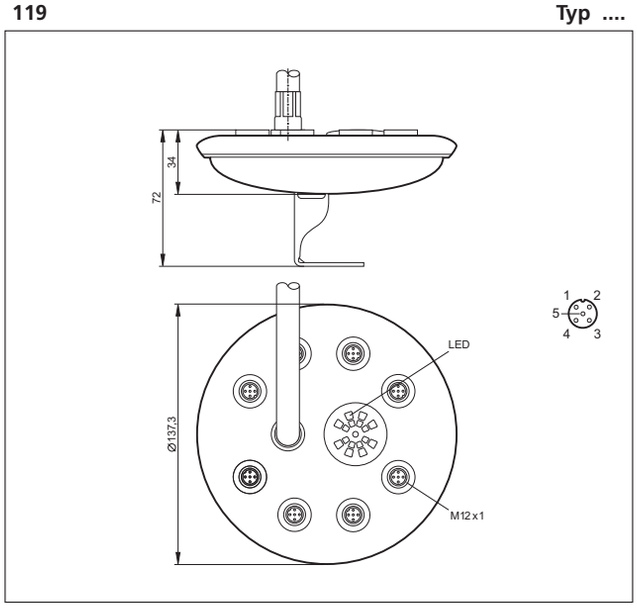

Page 212

120 **Typ E1, E4 ....**

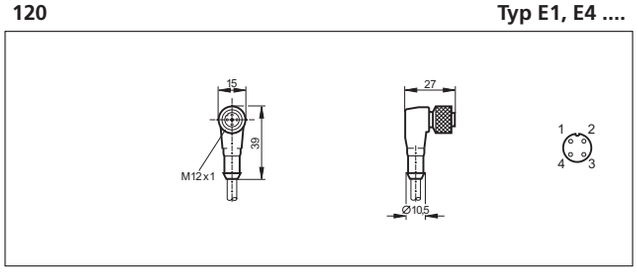

Page 198, 215

Visit our website: www.ifm-electronic.com

Complete ifm product range

121 **Typ E1 ....**

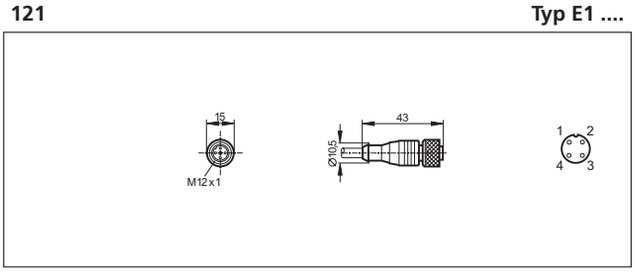

Page 198, 215

122 **Typ E1 ....**

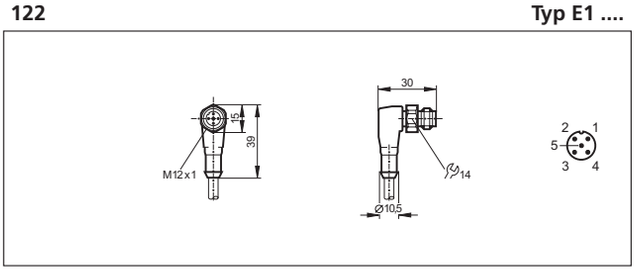

Page 205, 215

123 **Typ E1 ....**

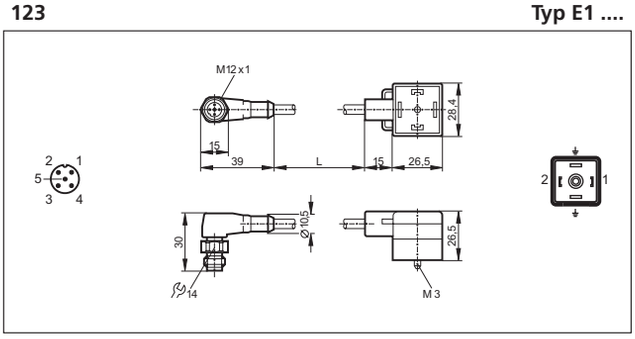

Page 215

124 **Typ E1 ....**

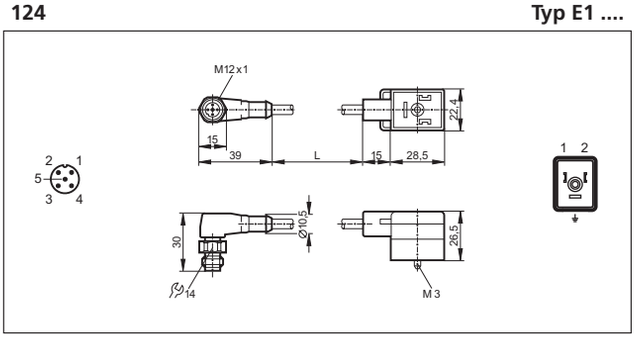

Page 215

125 **Typ E1 ....**

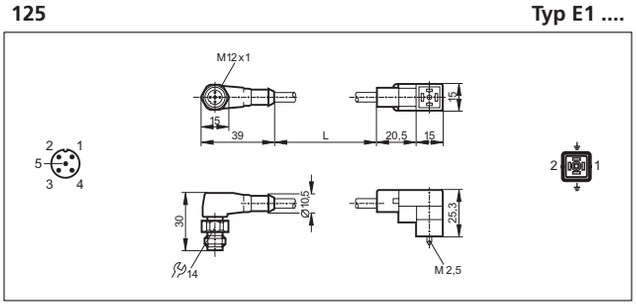

Page 215

126 **Typ E1 ....**

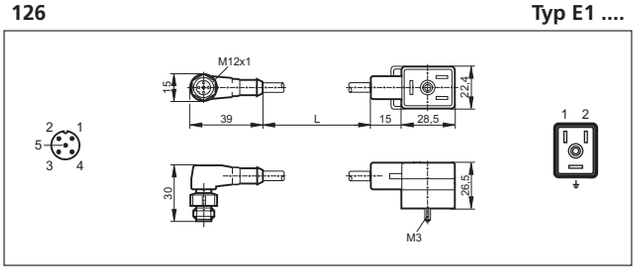

Page 215

Active zone / sensing face

The active zone is the area over the sensing face in which a proximity switch reacts to the approach of damping material, i.e. where it changes its switching status.

adjustable

The output function is activated if the measured value is between the set switch-on and switch-off point.

ATEX

ATEX (**AT**mosphère **EX**plosible) is an abbreviation for uniform EU directives for explosion protection in the industry (hazardous areas). Units for hazardous areas have to be approved according to these guidelines if they are launched after 30 June 2003.

Bursting pressure

The pressure at which the pressure-bearing parts burst or measured medium leaks out.

Cable length

To avoid voltage drops the maximum cable length indicated in the data sheet has to be adhered to.

Cable sheath materials

Depending on environment and application the materials show different resistances. Therefore certain properties or the suitability for a certain application cannot be guaranteed. Concerning the specific resistances we refer you to the explanations under "PUR cable", "PVC cable" and "PPU cable". The general notes given there do not exempt from any tests.

CIP / SIP

Common abbreviations in the food industry:

CIP = Cleaning in place.

SIP = Sterilisation in place.

They identify cleaning and sterilisation processes within closed installations with cleaning / disinfecting solutions circulating in the circuit. Temperatures up to 140 °C may occur for a short time.

Correction factors

The correction factors (K) indicate the reduction of the real sensing range if a different material other than mild steel (Fe360) is used. The change of the real sensing range depends on the type, internal structure, size and geometry of the material to be sensed.

Typical correction factors for inductive units:

steel = 1, stainless steel approx. 0.7, brass approx. 0.4, aluminium approx. 0.3, copper approx. 0.2

Typical correction factors for capacitive units:

water = 1, glass approx. 0.4, ceramics approx. 0.2, PVC approx. 0.2

Some inductive proximity switches use a constant correction factor (K=1) for all metals.

Current consumption

Current for the internal consumption of the unit. The value specified in the data sheet applies to the switched unit without load.

Current rating / continuous	The current at which units can be continuously operated. The units are protected against short circuits, overload and reverse polarity. In the case of a short circuit the output transistor is blocked immediately. When the short circuit has been rectified, the unit is ready again for operation.
Current rating / peak	The maximum current which may flow for a short time when power is applied without influencing the functioning of the sensor.
Deviation of the characteristics	The highest deviation of the characteristics from a straight line in the case of setting the limit values of the pressure sensors is defined by the characteristics deviation. For characteristics deviation for setting of limit values see DIN 16086.
Dynamic response	The dynamic response is the time between the change in temperature in the medium and the moment when the sensor has reached the new medium temperature. So t_{05} or t_{09} correspond to 50 % or 90 % of the final value (to DIN EN 60751, IEC 751).
Electrical design	DC PNP: DC unit with positive output signal (sourcing). DC NPN: DC unit with negative output signal (sinking). AC/DC dual voltage: connection either to DC or AC voltage.
Flow adapter	In conjunction with flow sensors flow adapters can be used for detecting small flow rates lower than specified for the individual sensors. The medium and ambient temperatures should be approximately the same.
Flush mounting	The active face of a proximity switch can be mounted flush with the damping material.
greatest	The measuring range where temperature, heat capacity or viscosity etc. of the medium have the least influence on the switch point.

Housing materials

Metal housing:
aluminium, galvanised steel, Optalloy-plated brass, Teflon-plated brass,

stainless steel (rustfree 303S22, acid-resistant 320S31):
stainless steel material no. 303S22 (X10 Cr NiS 18 9)
stainless steel material no. 316S12 (X2 Cr Ni Mo 1713 2)
316S12 (X2 Cr Ni Mo 18 14 3)
320S31 (X6 Cr Ni Mo Ti 17 12 2)

Plastic housing:
PBT (polybutyleneterephthalate)
The housing is largely resistant to aliphatic and aromatic hydrocarbons, oils, greases, hydraulic fluids, fuels; no stress cracking when exposed to air.
The housing is not resistant to hot water, hot steam, acetone , halocarbons, concentrated acids and alkalis.

Modified PPO:
The housing is largely resistant to diluted mineral acids, weak alkalis, some alcohols, oils and greases depending on additives; resistant to hydrolysis in hot and cold water.
The housing is not resistant to aromatic hydrocarbons and hydrocarbons containing chlorine, petrol, oils and greases depending on additives.

Chemically resistant fluoroplastics:
PTFE (polytetrafluoroethylene), LCP. PEEK, PEI, PA, mod. PC
Depending on environment and application plastics show different resistances. Therefore certain properties or the suitability for a certain application cannot be guaranteed.
For frequent or permanent exposure to chemicals all housing materials require testing prior to use.

Housing materials in contact with the medium

The materials of the sensors are adapted to the requirements of industrial hydraulic and pneumatic applications or to the requirements of hygienic applications. The resistance of the materials must be checked for other applications.

Hysteresis

The difference between the switch-on and the switch-off point.

Hysteresis of the switching output

Flow monitor:
Flow difference between the switch-on and switch-off points of the flow monitor in % of the switch point.

Pressure sensors:
The difference between the switch-on point and switch-off point is called hysteresis of the switching output. The hysteresis of the pressure sensor (without PB 7...) can be set between 2 % and 97 % of the value of the measuring range.

Temperature sensors:
The difference between the setpoint and reset point is called hysteresis of the switching output. The hysteresis of the temperature sensor can be set between 0.5 °C up to 190 °C (TR) or between 0.5 °C up to 165 °C (TN).

Measuring error

It indicates the deviation of the displayed value from the final value in %.

Measuring range

The measuring range is the range of the measured quantity for which the measurement deviations of a measuring instrument are to be within the defined error limits. The limits of the measuring range are the initial and final value.

Medium temperature

The medium temperature specifies up to what temperatures the sensors can be used.

Noise immunity

To avoid malfunction as a result of too high voltage peaks which might occur in critical applications, we recommend laying the cables of sensors separately from other cables (e.g. motors, solenoid valves). In especially difficult cases it might be necessary to lay screened cables. If in doubt please contact our engineers.

Nominal pressure

The pressure up to which the wetted parts can be operated.

Operating temperature

Temperature range which guarantees a safe functioning of the device. The operating temperature of the unit must be within the range indicated in the data sheet and must not be above or below this range.

Operating voltage

The voltage range for which the device is rated. The stated nominal voltage and the tolerance result in the operating voltage range in which the device functions safely. Exceeding or falling below the maximum or minimum values is only allowed within the limits specified in the data sheets.

Output function

Normally open: object within the active zone – output closed / high signal.
Normally closed: object within the active zone – output open / low signal.
Programmable: choice between normally closed or normally open.
Complementary: normally open and normally closed outputs available simultaneously.

Overload protected

The response threshold for the short circuit protection is above the value specified for the continuous current rating. Units protected against overload are protected against destruction in this range as well.

PELV

PELV (Protective Extra Low Voltage) describes an electrical system in which the voltage cannot exceed the value of 60 V DC. It also includes a protective measure against direct and indirect contact with dangerous voltage, the so-called "safe isolation" from the supply system. Circuits and/or bodies in a PELV system can be connected to ground - in contrast to the SELV system.

Power-on delay time

The power-on delay time is the time which elapses between the application of the operating voltage and the readiness of the device to generate the correct switching signal.

Pressure range

The mechanical design of the sensor housings enables use of the flow monitors in different pressure ranges.

Programmable output function

The switching output can be programmed as normally open or normally closed (for photoelectric proximity switches light-on or dark-on) by means of the choice of the wire connection or via programming buttons.

Protection classes

Protection class 1 (I): units with protective wire connection
Protection class 2 (II): units with protective insulation (double insulation)
Protection class 3 (III): units for connection to protective extra-low voltage
Voltage supply to EN 50178, PELV, SELV

All units marked protection class III or all units without protective wire connection or protective insulation mark must be connected to protective extra-low voltage (max. 60 V DC). For inductive proximity switches this can be SELV or PELV.

Protection rating

The protection rating (to IEC 529 / DIN 40 050) defines the degree of protection from ingress of dust and moisture.

IP 65

Complete protection against contact with dangerous parts; protection against ingress of dust; protection against water jets.

IP66

Complete protection against contact with dangerous parts; protection against ingress of dust. Protection against strong water jets.

IP 67

Complete protection against contact with dangerous parts; protection against ingress of dust; protection when immersed temporarily in water.

1 m depth of water for 30 minutes.

IP 68 (ifm-specific definition)

Complete protection against contact with dangerous parts; protection against ingress of dust; protection when permanently immersed in water. According to ifm factory standard:

1 m depth of water for 7 days.

IP 69K

Complete protection against contact with dangerous parts, protection against ingress of dust, protection against ingress of water during high-pressure steam cleaning

Protective insulation

Protection is achieved not only through basic insulation but by means of a double or enhanced insulation that meets the requirements of the protective insulation.

PTB / INERIS

National bodies testing electrical equipment and approving it for hazardous areas.

PTB = Physikalisch-Technische Bundesanstalt Braunschweig und Berlin.

INERIS = Institut National de L'Environnement Industriel et de Risques (France).

PUR cable

Oil-resistant cable. Not resistant to hydrolysis, therefore not suited for permanent contact with water. In order to avoid breakage the cables should not be moved if the temperature falls below -5 °C.

PUR/PVC cable (PPU cable)

PVC cable with additional PUR sheathing. Oil-resistant cable. Not resistant to hydrolysis, therefore not suited for permanent contact with water. In order to avoid breakage the cables should not be bent if the temperature falls below -5 °C (-> plastics).

PVC cable

Tried-and-tested standard cable. In order to avoid breakage the cables should not be moved if the temperature falls below -5 °C. PVC cables are not designed for continuous operation in oily environments. They are neither resistant to ozone nor to ultra-violet light.

Range of destruction

The range of destruction is the pressure range in which changes to the measuring characteristics of the pressure sensor are permanent and mechanical destruction of the pressure sensor is possible. It starts at the end of the overload range.

Repeatability

The repeatability of two measurements under standard conditions. The difference of the measured values must not exceed 10 %.

Response time

Flow monitor:

The response time is the time period the adjusted flow monitor needs to detect and indicate flow or no flow. For control monitors with wire monitoring, a wire break or a short circuit is detected and signalled within this time.

Pressure sensors:

The response time is the time between the pressure change and the change in the output stage at the switching output.

Conditions: Sudden rise or fall of the pressure from 0 % to 100 % of the final value of the measuring range (VMR). Value of the switch point: 70 % of VMR, value of the reset point: 30 % of VMR.

Temperature sensors:

The dynamic response is the time between the change in temperature in the medium and the moment when the sensor has reached the new medium temperature. t_{05} or t_{09} correspond to 50 % or 90 % of the final value (to DIN EN 60751, IEC 751).

SELV

SELV (Safe Extra Low Voltage) describes an electrical system in which the voltage does not exceed the value of 60 V DC. It includes a protective measure against direct and indirect contact with dangerous voltage, the so-called "safe isolation" from the supply system. In contrast to a PELV system a SELV system must not be grounded.

Sensitivity

The measuring range where temperature, heat capacity or viscosity etc. of the medium have the least influence on the switch point.

Setting range

Within the setting range the flow monitors can be adjusted to any switch point. It is recommended to select the switch point if possible within the area of the greatest sensitivity.

Shock and vibration resistance

The shock and vibration resistance of all sensors is tested.

Vibration

According to EN 60068-2-6 under the following conditions:

along 3 mutually perpendicular axes,

Frequency range: 10 Hz to 55 Hz

Example proximity switches:

Amplitude: 1mm for inductive and capacitive proximity switches. 0.5 mm for photoelectric sensors.

Vibration duration: 5 min.

Duration of the time of exposure at resonant frequency or at 55 Hz: 30 min in each axis (at total of 90 min.).

Shock resistance

According to EN 60068-2-27 under the following conditions:

6 shocks in each direction along axes perpendicular to each other (6 individual tests).

Example proximity switches:

Pulse shape: half-sine.

Peak acceleration: 30 g.

Pulse duration: 11 ms.

Short-circuit protection

Most ifm sensors are protected against excessive current by means of a pulsed short-circuit protection.

Switch point accuracy

The possible deviation of the set value from the real value of the switch point.

System pressure

The pressure of the measured medium to which the pressure sensor is subjected.

Temperature classifications

Temperature classifications to DIN VDE 0165, classification of the equipment by the permissible surface temperature:

Temperature classification T1:
Maximum permissible surface temperature of the equipment: 450 °C,
ignition temperatures of the combustible materials: > 450 °C

Temperature classification T2:
Maximum permissible surface temperature of the equipment: 300 °C,
ignition temperatures of the combustible materials: > 300 °C < 450 °C

Temperature classification T3:
Maximum permissible surface temperature of the equipment: 200 °C,
ignition temperatures of the combustible materials: > 200 °C < 300 °C

Temperature classification T4:
Maximum permissible surface temperature of the equipment: 135 °C,
ignition temperatures of the combustible materials: > 135 °C < 200 °C

Temperature classification T5:
Maximum permissible surface temperature of the equipment: 100 °C,
ignition temperatures of the combustible materials: > 100 °C < 135 °C

Temperature classification T6:
Maximum permissible surface temperature of the equipment: 85 °C,
ignition temperatures of the combustible materials: > 85 °C < 100 °C

Temperature gradient

The temperature gradient indicates the permissible temperature fluctuation of the medium per time unit without causing any change of the output signal when the switch point is properly set within the range of the greatest sensitivity. The temperature gradients stated in the data sheets were determined in water at a nominal flow of 60cm/s and a switch point set at 50 % of the nominal flow. Other conditions could result in other temperature gradients.

TPR cable

Cable for operating temperatures from -40 °C to 150 °C. Good resistance to oils, fuels, acids and alkalies.

Vibration resistance

The pressure and temperature sensors are tested according to DIN/IEC 67-2-6 in the frequency range of 10 to 2000 Hz. They are resistant to vibration up to 20 g.

Voltage drop

As the switching output consists of a semiconductor (transistor, thyristor or triac), in the switched state a (small) drop in the voltage in series to the load occurs. In two-wire technology the voltage drop also serves to provide energy to the electronics of the sensor. The voltage drop is measured across the sensor in its switched state at max. current load. EN 50008 - 025, 036, 038.

Window

The output function is activated if the measured value is between the set switch-on and switch-off point.

Wire monitoring

Control monitors with the option wire monitoring monitor the cable between sensor and control monitor with regard to wire break or short circuit. A failure is indicated by a red LED and an additional output relay.



Position sensors and object recognition

Inductive sensors

Electromagnetic field immune and temperature shock resistant sensors · High-grade stainless steel housings · Protection up to IP 69 K · Versions with increased sensing range · Analogue output · Use e.g. in hazardous areas, in the food industry and in mobile machines · Sensors with correction factor 0 or 1

Capacitive sensors

High operational reliability by increased noise immunity · Adjustable sensing ranges · Variable connection options by cable, connector or terminals · Versions for industrial applications and use in hazardous areas

Magnetic sensors, cylinder sensors

Cylinder sensors: For robust industrial applications · For position detection of pistons in pneumatic cylinders · Versions with ATEX approval · Accessories for all common cylinder types · Magnetic sensors: For position detection · Polarity independent · Ingress resistant to high-pressure cleaning

Safety technology

Sensors in compliance with the machinery directive · All four control categories available · Direct connection to PLCs and logic modules · Sensors operating without coded target · Enable zone monitored for target position and dwell time

Valve sensors

Absolutely safely with no wear at all · Protection rating IP 67 · Resistant to mechanical stress such as shock or vibration · Special versions for AS-interface and hazardous areas · Quick and easy mounting

Photoelectric sensors

Infrared and red light sensors: Through-beam, retro-reflective and retro-reflective sensors with polarisation filter · Diffuse reflection sensors · Fibre optics · Laser sensors · Colour and contrast detection · Glass and film detection· Laser distance sensors with PMD technology: 10 m range · Background suppression

Object recognition

Object recognition for assembly and manufacturing tasks and quality control · Orientation-independent recognition of contour and orientation · Ultra-flat back-lights for 4 times higher luminous power

Encoders

Incremental encoders: Solid shaft encoders · Hollow shaft encoders with integrated stator coupling · Absolute encoders: Singleturn and multiturn · SSI interface · Profibus DP gateway

Evaluation systems, power supplies

Pulse processing and display: Monitors with various pulse evaluation functions · Speed monitors · Programmable counters · Digital displays · Hazardous dust areas · Transformer and switched-mode power supplies: Versions from 1 to 40 A

Connection technology

High-quality connectors · From M8, M12, M18 standard versions to the valve plug · For different applications: Industrial applications, oils and coolants, electromagnetic fields, robotics, hygienic and wet areas as well as explosive atmospheres

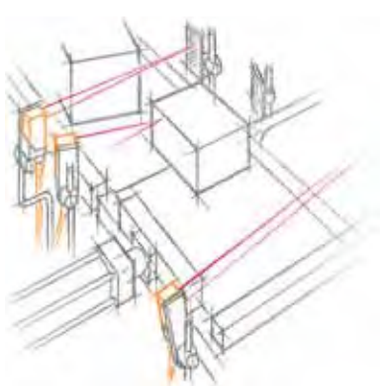

Visit our website: www.ifm-electronic.com



Fluid sensors and diagnostic systems

Level sensors

Capacitive level sensors: For liquids and dry bulk material · Increased noise immunity · Level sensors: Local level indication · Point level sensors: Versions with approvals to the German overspill standard WHG section 19

Flow sensors

Flow sensors with integrated control monitor or external amplifier · Flow sensors for hazardous areas · Flow rate sensor for industrial applications · Airflow sensor · Thermal compressed air meter for leakage monitoring · Consumed quantity meter for special gases

Pressure sensors

High overload resistance · Universal process fitting via adapter · Alphanumeric LED display · Maintenance-free and with longterm stability · Setting of the switch points possible without system pressure · Special versions for process technology and integration into hydraulic / pneumatic networks

Temperature sensors

Control monitors with integrated sensor or for the connection of probe / cable sensors · Pt100 / Pt1000 versions · Universal process connection via adapter · Alphanumeric LED display · Analogue and / or switching outputs

Diagnostic systems

Rolling element bearing diagnosis: Rolling element bearing damage can be detected as it arises · Increased uptime of plants and machines · Real-time maintenance: Sensors with serial or Ethernet interface · Visualisation software · Diagnostic electronics for vibration sensors

Evaluation systems, power supplies

Switching amplifiers: Threshold relay for standard signals with RS-232 interface · Digital displays with LED or LCD display · Transformer / switched-mode power supplies: Transformer power supply with 1 or 2 channels · Integrated sensor supply · Switched-mode power supplies with a stable supply voltage

Connection technology

High-quality connectors · From M8, M12, M18 standard versions to the valve plug · Versions for different applications: Industrial applications, oils and coolants, electro-magnetic fields, hygienic and wet areas as well as explosive atmospheres

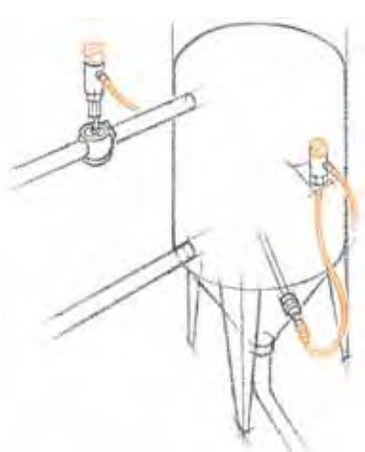

Visit our website: www.ifm-electronic.com



Bus system AS-interface

AS-i controller with integrated PLC · Masters · Gateways to all common bus systems · AS-i repeaters · I/O modules · AS-i Safety at Work · Intelligent sensors with integrated AS-i slave · AS-i actuators · Extensive range of accessories · Software

Power supplies

AS-i switched-mode power supplies · PELV requirements to EN 50178 and EN 60204 · Voltage selector for 230 V or 115 V networks · One-phase or three-phase versions · Regulated DC output voltage between 29.5 V und 31.6 V · Rail mounting

Connection technology

High-quality connectors · From M8, M12, M18 standard versions to the valve plug · For different applications: Industrial applications, oils and coolants, electromagnetic fields, robotics, hygienic and wet areas as well as explosive atmospheres

Bus systems



Identification systems



DataMatrix code-reading systems

Sensors for reading Data Matrix codes · High reading speed and data protection · Small robust design · Direct PLC connection · Quick and easy set-up · Ideal for rough surfaces

RF-identification systems

Industrially compatible identification system for AS-interface · Read / write head or read head requiring little space due to the narrow design · Coding of workpiece carriers in routing conveyors · Quick and easy set-up

Power supplies

AS-i switched-mode power supplies · PELV requirements to EN 50178 and EN 60204 · Voltage selector for 230 V or 115 V networks · One-phase or three-phase versions · Regulated DC output voltage between 29.5 V und 31.6 V · Rail mounting

Connection technology

High-quality connectors · From M8, M12, M18 standard versions to the valve plug · For different applications: Industrial applications, oils and coolants, electromagnetic fields, robotics, hygienic and wet areas as well as explosive atmospheres

Visit our website: www.ifm-electronic.com

Control systems for mobile vehicles

Controllers and masters with CANopen gateway · Remote maintenance and diagnosis · Displays and operating elements · Decentralised I/O modules to control proportional hydraulic valves · Sensors · Data memory and logger

Connection technology

High-quality connectors · From M8, M12, M18 standard versions to the valve plug · For different applications: Industrial applications, oils and coolants, electromagnetic fields, robotics, hygienic and wet areas as well as explosive atmospheres



Control systems

Visit our website: www.ifm-electronic.com

www.ifm-electronic.com
Information around the clock and around the globe in 18 languages on the internet.

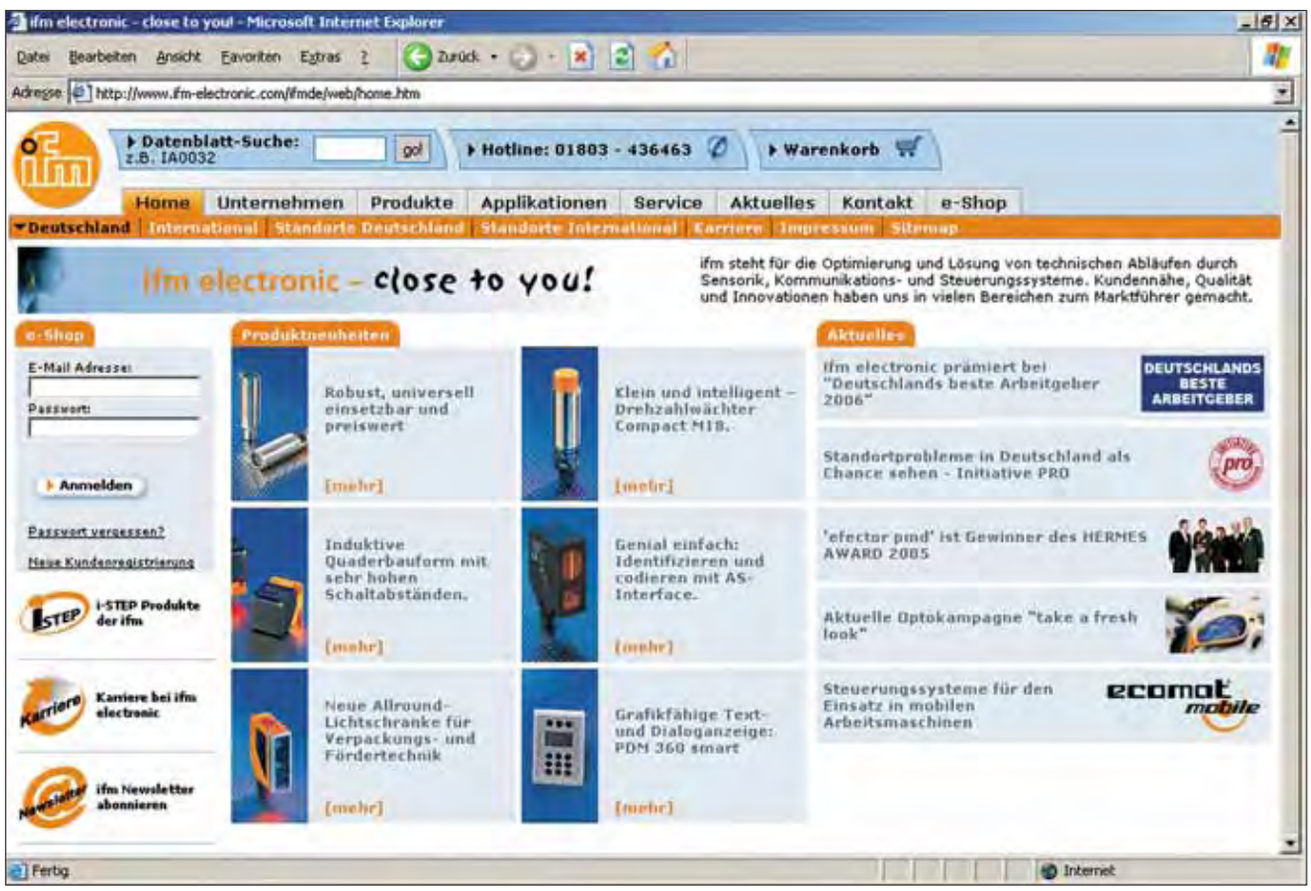

• Information
- product innovations
- company news
- exhibition info
- locations
- jobs

• Documentation
- data sheets
- operating instructions
- manuals
- approvals
- CAD data

• Communication*
- request for documents
- recall service
- live advice
- newsletter

• Selection
- interactive product selection aids
- configuration tools
- data sheet direct

• Animation
- virtual product animations
- flash movies (video sequences)

• Application
- applications
- product recommendations
- calculation aids

• Transaction*
- e-shop processing
- e-procurement catalogues
- B2B services

** Some offered information is available country-specific.*

Visit our website: www.ifm-electronic.com

Convenient order processing via the e-shop** on the internet.

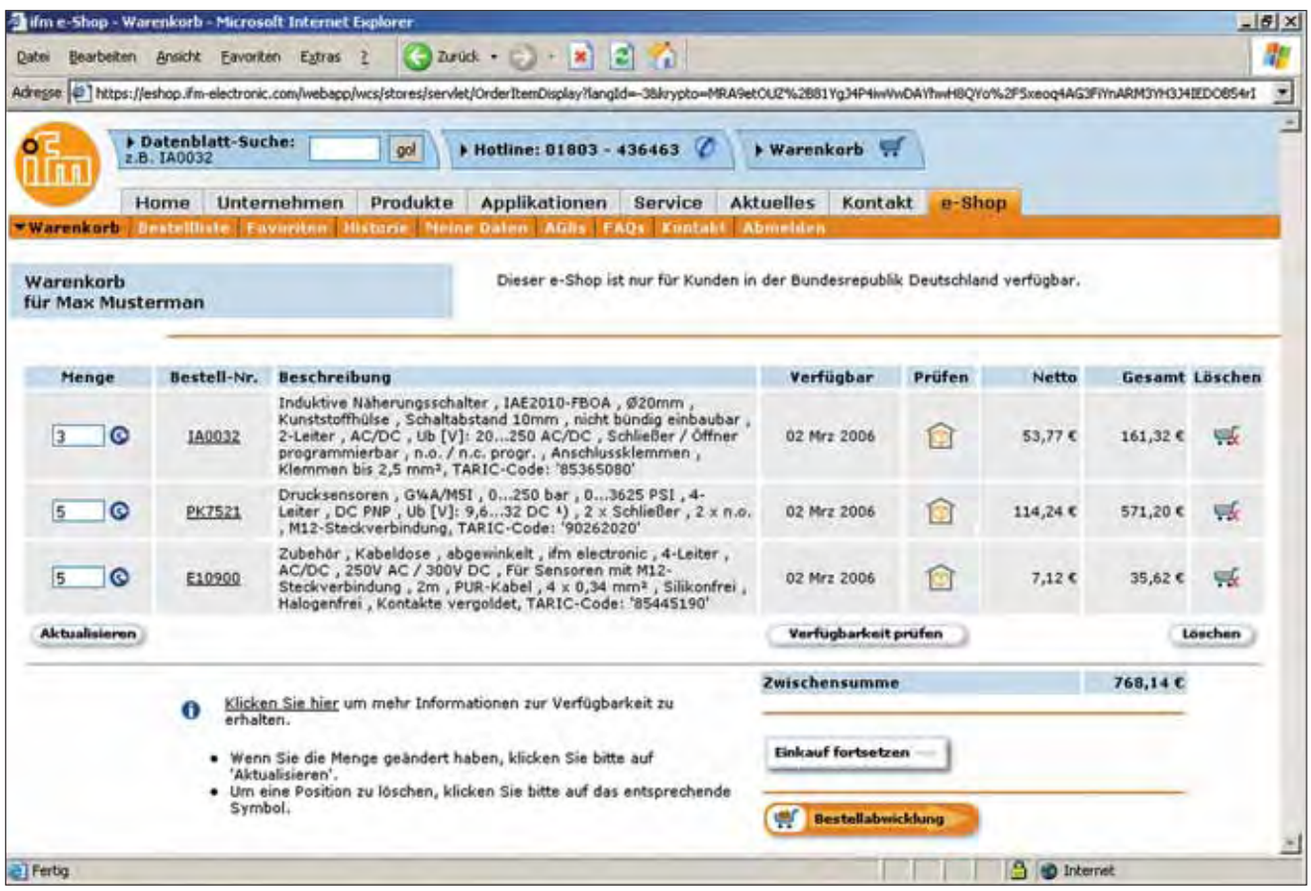

Secured authentication

Customer-related price indication

Real time availability check

Personal product favourites

Online parcel tracking

Individual order history

Convenient quick input form

Simple order processing

Management of shipping addresses

Confirmations by e-mail

***Available in Germany, France, United Kingdom, Switzerland and in the USA. More countries in preparation.*

Visit our website: www.ifm-electronic.com

The company in close contact with you

ifm is present on all important markets – in more than 70 countries worldwide. Wherever you export, we are always close to you. In Germany alone over 100 employees in 7 branches advise our customers. ifm production sites are located in Germany and the USA. We support you with work-shops and seminars in our worldwide training centres and in your plant.



At home in your industry

We provide you with standard solutions and concepts tailored to the requirements of your industry. This is backed by the knowledge of our engineers who are always up to date. Our worldwide application know-how is constantly updated via our company own Intranet.
Our special project service helps you with tenders and project plannings.



Investments in product availability

For our customers we invested a lot in development and production capacities. Due to state-of-the-art production technology we can manufacture big quantities quickly and in a consistently high quality. The central logistic centre guarantees high availability of our products.



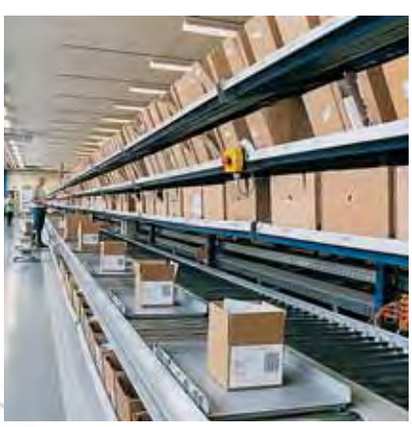

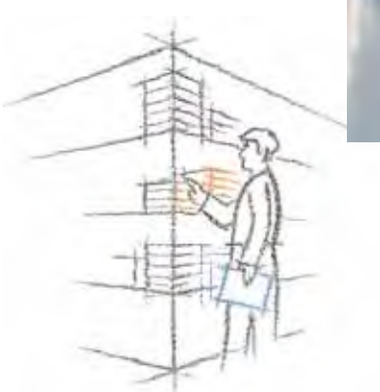

Visit our website: www.ifm-electronic.com

☐ **Request for quotation**

☐ **Request for sample**

☐ **Request for technical data**

Quantity required	Order no.	Quantity required	Order no.

Company

Department

Name First name

Street

Post code / town

Tel. E-mail

Date Signature

Visit our website: www.ifm-electronic.com

Argentina and Uruguay
Aparatos Elèctricos Automaticos S.A.C.I.F.
Asunción 2130
1419 - Buenos Aires
Argentina
Phone +54 / 11 / 45 74 1555
Fax +54 / 11 / 45 74 2400
robertomoriones@aea.com.ar
www.aea.com.ar

Australia
ifm efector pty ltd.
P.O. Box 4084
Suite 3, 745 Springvale Road
Mulgrave VIC 3170
Phone 1300 365 088
Fax 1300 365 070
sales.au@ifm-electronic.com
www.ifmefector.com.au

Austria
ifm electronic gmbh
Wienerbergstraße 41
Gebäude E
1120 Vienna
Phone +43 / 1 / 617 45 00
Fax +43 / 1 / 617 45 00 10
info.at@ifm-electronic.com
www.ifm-electronic.at

Bangladesh
Sensotec Automation
Red Crescent Chamber
87, Motijheel Commercial Area
Dhaka 1000
Bangladesh
Phone +880 171 546 890
sensotec@agni.com

Belarus
DEPOSIT INVEST
Joint-Stock Company
Block 2,
27 Zheleznodorovhnaya street
220089 Minsk
Republic of Belarus
Phone +375-17-270 75 06
Fax +375-17-270 75 07
george_ozerov@infonet.by

Belgium and Luxembourg
ifm electronic n.v./s.a.
Zuiderlaan 91
1731 Zellik
België
Tel. +32 2 481 0220
Fax +32 2 463 1795
info.be@ifm-electronic.com
www.ifm-electronic.be

Brazil
ifm electronic Ltda.
Rua Eleonora Cintra, 140
Jardim Analia Franco
03337-000 São Paulo/SP
Phone +55-11-6672-1730
Fax +55-11-6673-3501
info.br@ifm-electronic.com
www.ifm-electronic.com.br

Bulgaria
ANIPAL
Vranja Str. 30
1233 Sofia
Phone +359-2-33 32 37
Fax +359-2-931 15 11
anipal@mail.orbitel.bg

Canada
ifm efector Canada Inc.
700 Dorval Drive/Corporate Centre
Oakville; L6K3V3 Ontario
Phone +1-800-441-8246
Fax +1-800-329-0436
info@ifmefector.ca
www.ifmefector.ca

Chile
Electronica Industrial Schädler y Cia. Ltda.
Av. Antonio Varas 1871
Providencia
6641545 Santiago
Phone +56 / 2 / 274 74 30
Fax +56 / 2 / 204 93 38
info@schadler.com
www.schadler.com

China
ifm electronic (Shanghai) Co., Ltd
Building 4 56 Meisheng Road
Waigaoqiao Free Trade Zone
Shanghai
People's Republic of China
Phone +86-21-51 17 27 18
Fax +86-21-51 17 27 19
info.cn@ifm-electronic.com
www.ifm-electronic.com.cn

ifm electronic (HK) Ltd
Units 1103-1104, 11/F.
Tower 2, Metroplaza
No. 223 Hing Fong Road
KWAI CHUNG
N.T., HONG KONG
Phone +852 9457-0360
Fax +852 3697-0222
www.ifm-electronic.hk

Everharmony-Enterprise, Inc.
26, Lane 63
Tung Hwa South Road, Sec. 2
P.O. Box 96-47
Taipei
Phone +886 / 2 / 270 700 69
Fax +886 / 2 / 270 247 23
info@everharmony.com.tw

Czech Republic
ifm electronic spol.s.r.o.
U Krízku 571
252 43 Prague
Phone +420 / 2 / 67 990 211
Fax +420 / 2 / 67 750 180
info.cz@ifm-electronic.com
www.ifm-electronic.cz

Denmark
ifm electronic a/s
Ringager 4A, 1.sal tv.
2605 Brøndby
Phone +45 70 20 11 08
Fax +45 70 20 11 09
info.dk@ifm-electronic.com
www.ifm-electronic.dk

Dominican Republic
WECH AUTOCONTROLES S. A.
Ave. Romulo Betancourt 2158
Edificio Wech
Urb. Renacimiento
Santo Domingo
Dominican Republic
Phone: + 1 809-531-0550
Fax: + 1 809-531-9175
wech@verizon.net.do
www.wechautocontroles.com.do

Egypt
Egyptian Establishment for Electromechanical Supplies
Mr. Ahmed Gouda
27 Al-Salam Street
Al Arezona, Al Haram Road
Giza 12111, Cairo
Phone +20 / 2 / 586 49 49
Fax +20 / 2 / 586 49 49
Mobile +20 10 10 61 791
ahgouda@hotmail.com

Estonia
Pesmel Estonia LTD
Segu 4
76505 Saue
Estonia
Phone: +372 674 73 30
Fax: +372 674 73 31
pesmel@pesmel.ee
www.pesmel.ee

Finland
ifm electronic oy
Vaakatie 5
00440 Helsinki
Phone +358 / 9 / 751 777 00
Fax +358 / 9 / 751 777 10
info.fi@ifm-electronic.com
www.ifm-electronic.fi

France
ifm electronic
Siège :
Savoie Technolac BP226
73374 Le Bourget du Lac
Agence commerciale :
Immeuble Uranus
1-3 rue Jean Richepin
93192 NOISY LE GRAND CEDEX
Tél: 0820 22 30 01
Fax: 0820 22 22 04
info.fr@ifm-electronic.com
www.ifm-electronic.fr

Germany
ifm electronic gmbh
Teichstraße 4
45127 Essen
Phone +49 201 2 42 20
Fax +49 201 2 42 22 00
info@ifm-electronic.com
www.ifm-electronic.de

Greece
ifm electronic monoprosopi E.P.E.
27, Andrea Papandreou Street
15125 Amaroussi
Greece
Tel.: +30 210 61 800 90
Fax.: +30 210 61 994 00
info.gr@ifm-electronic.com
www.ifm-electronic.gr

Hungary
ifm electronic kft.
Közép u. 16.
II.em. 208. iroda
H-9024 Györ
Phone +36-96 / 518-397
Fax +36-96 / 518-398
www.ifm-electronic.hu

India
ifm electronic India Branch Office
Plot No. P-39/1
MIDC Gokul Shirgaon
Kolhapur – 416234
Maharashtra State, India
Phone +91 / 231 / 267 27 70
Fax +91 / 231 / 267 23 88
info@ifm-electronic.in
www.ifm-electronic.in

Indonesia
PT Indoserako Sejahtera
Jl. P. Jayakarta 121 No. 59
10730 Jakarta Pusat
Phone +62 / 21 6 24 8923
Fax +62 / 21 6 24 8922
iso297@dnet.net.id

Iran
MEHR KANAZ Co.
No. 31, Koosha St.
Shariati Ave.
P.O. Box 19395 - 4481
Teheran
Phone +98 / 21/ 2222 6994
Fax +98 / 21/ 2222 7851
info@mehr-kanaz.com
www.mehr-kanaz.com

Ireland
ifm electronic (Ireland) Ltd.
No. 7, The Courtyard
Kilcarbery Business Park
New Nangor Road
Clondalkin
Dublin 22
Phone +353 / 1 / 413 60 66
Fax +353 / 1 / 457 38 28
sales_ie@ifm-electronic.com
www.ifm-electronic.ie

Israel
Astragal Ltd.
3, Hashikma Str.
Azur 58001
P.O. Box 99
Azur 58190
Phone +972 / 3 / 5 59 16 60
Fax +972 / 3 / 5 59 23 40
astragal@astragal.co.il
www.astragal.co.il

Italy
ifm electronic
Centro Direzionale Colleoni
Palazzo Andromeda 2
Via Paracelso No. 18
20041 Agrate-Brianza (Milan)
Phone +39 / 68 99 982
Fax +39 / 68 99 995
info.it@ifm-electronic.com
www.ifm-electronic.it

Japan
efector co. ltd.
Chiba Higashi
Techno Green Park
2-9-20 Okayamadai
Togane-shi, Chiba 283-0826
Phone +81 / 475 50 3003
Fax +81 / 475 50 3013
ifm-j@efector.co.jp
www.efector.co.jp

Jordan
Al Mashreqan Trading Supplies
P.O.Box.851054
11185 Swaifieh
Amman - Jordan.
Phone +962 6 581 8841
Fax +962 6 581 8892
info@mashreqan.com

Korea
ifm electronic Inc.
2F Hyundai Liberty House 201
Hannam-Dong 258
Yongsan-Gu, Seoul
Phone +82 2-790-5610
Fax +82 2-790-5613
kr@ifm-electronic.com
www.ifm-electronic.kr

KC Enterprises Co., Ltd.
Suite 404 Royal Plaza 864-1
Jnaghang, Ilsan
410-837 Goyang, Gyunggi-Do
Phone +82 31 903 3731
Fax +82 31 908 3731
port@kcent.co.kr
www.kcent.co.kr

Latvia
EC Systems
Katlakalna Str. 4A
1073 Riga
Latvia
Phone: +371 724 1231
Fax: +371 724 8478
alnis@ecsystems.lv
www.ecsystems.lv

Lebanon
Middle East Development Co. SAL (MEDEVCO)
Medevco Building
Jeita Main Road
Jeita - Kesrouan
Lebanon
Mail address :
P.O.Box 67
Jounieh
Lebanon
Tel + 961-9-233550
Fax + 961-9-233554
info@medevco-lebanon.com

Lithuania
Elinta UAB
Pramones pr.. 16E
51187 Kaunas
Lithuania
Phone: +370 37 351 987
Fax: +370 37 452 780
info@elinta.lt
www.elinta.lt

Visit our website: www.ifm-electronic.com

Malaysia
ifm electronic Pte. Ltd
Malaysian Branch Office
No. 21, Jalan Kemunting
Taman Kebun The
80250 Johor Bahru
Johor, West Malaysia
Phone +60 / 7 / 332 5022
Fax +60 / 7 / 332 1577
sales_my@ifm-electronic.com

ifm electronic
Asia Regional Office
No. 21, Jalan Kemunting,
Taman Kebun The
80250 Johor Bahru
Johor, West Malaysia
Phone +60 / 7 / 332 5022
Fax +60 / 7 / 332 1577
sales_my@ifm-electronic.com

Mexico
ifm efector S. de R.L. de C.V.
Anillo Periférico, 1816-1
Col. Hacienda San Jerónimo
Monterrey, N.L.
Mexico 64630
Phone +52-81-8040-3535
Fax +52-81-8040-2343
www.ifmefector.mx

Netherlands
ifm electronic b.v.
Deventerweg 1 E
3843 GA Harderwijk
Phone +31 / 341 438 438
Fax +31 / 341 438 430
info.nl@ifm-electronic.com
www.ifm-electronic.nl

New Zealand
ifm efector pty ltd.
Unit B, 20 Cain Road
Penrose, Auckland
Phone +64 / 95 79 69 91
Fax +64 / 95 79 92 82
sales.nz@ifm-electronic.com

Nigeria
Automated Process Ltd
3rd Floor, 32 Lagos Abeokuta Expressway
Near Cement Bus Stop
Dopemu, Agege
Lagos State, Nigeria
Phone + 234 / 01 / 4729 967
Fax + 234 /01 / 4925 865
sales@automated-process.com
www.automated-process.com

Norway
Siv.Ing. J.F.Knudtzen AS
Billingstadsletta 97
1396 Billingstad
Postboks 160
1378 Nesbru
Phone +47 / 66 98 33 50
Fax +47 / 66 98 09 55
firmapost@jfk.no
www.jfk.no

Oman
Technical Engineering Company LLC.
P.O.Box. 59
Madinat Al Sultan Qaboos
Postal Code 115
Sultanate of Oman
Tel. + 968 24503593
Fax.+ 968 24503573
tecoman@omantel.net.om

Pakistan
AB Automation
Shop No.2. Rubab Chamber
M.A. Jinnah Road
Off Sarai Road
Karachi
Phone +92 / 21 / 2412 278
Fax +92 / 21 / 2422 277
abauto@cyber.net.pk

Peru
dekatec s.a.c.
Los Calderos 188
Urb. Vulcano, Ate
Lima / Peru
Phone +511 / 348 0293
Phone +511 / 348 0458
Phone +511 / 348 2269
Fax +511 / 349 0110
info@dekatec.com.pe
www.dekatec.com.pe

Philippines
Gram Industrial, Inc.
Unit 410 Common Goal Tower
Finance cor. Industry St.,
Madrigal Business Park,
Ayala Alabang, Muntinlupa City
1770 Philipines
Telefax: (+632) 850-8496
Phone: (+632) 850-2218
efector@gram.com.ph

Poland
ifm electronic Sp.z o.o.
ul. Kosciuszki 175
PL 40-524 Katowice
Phone +48 / 32 / 60 87 454
Fax +48 / 32 / 60 87 455
info.pl@ifm-electronic.com
www.ifm-electronic.pl

Portugal
ifm electronic – Sucursal em Portugal
Avenida da Republica 2503
4430-208 Vila Nova de Gaia
Phone +351 / 22 / 37 17 108
Fax +351 / 22 / 37 17 110
info.pt@ifm-electronic.com
www.ifm-electronic.pt

Romania
ifm electronic s.r.l.
Str. Cristian Nr. 5
550073 Sibiu
Phone: 0040 269 224550
Fax: 0040 269 224766
info.ro@ifm-electronic.com

Russia
ifm electronic
Ibragimova, 31, k.50
office 607
105318 Moscow
Tel.: +7 (095) 101-44-14
Fax: +8 (501) 415-38-04
info.ru@ifm-electronic.com
www.ifm-electronic.ru

Saudi Arabia
Noor Al-Shomoe for Electric & Maintenance
King Khalid Street, Cross 5
P.O. Box 2571
Al-Khobar 31952
Kingdom of Saudi Arabia
Phone +9 663 864 49 58
Fax +9 663 894 63 41
h.o.info@nooralshomoe.com

Singapore
ifm electronic Pte. Ltd.
25, Intern. Business Park
#03-104 German Center
609 916 Singapore
Phone +65 / 6 / 5 62 86 61
Fax +65 / 6 / 5 62 86 60
sales_sg@ifm-electronic.com
www.ifm-electronic.com.sg

Slovakia
ifm electronic spol. s.r.o.
Rybnicna 40
835 54 Bratislava
Phone +421 / 2 / 44 87 23 29
Fax +421 / 2 / 44 64 60 42
info.sk@ifm-electronic.com
www.ifm-electronic.sk

South Africa
Shorrock Automation (Pty) Ltd.
Postnet Suite
Private Bag X8
Elardus Park 219
0047 Pretoria
For Visitors and mail-order address:
Shorrok House
44 Sovereign Drive
Route 21, Corporate Park
Irene Ext. 30
Centurion, Pretoria
Phone +27 / 12 / 345 44 49
Fax +27 / 12 / 345 51 45
sales@shorrock.co.za
www.shorrock.co.za

Spain
ifm electronic – Sucursal en España
Edificio Prima Muntadas A
Parc Mas Blau
C/Berguedà 1
08820 El Prat de Llobregat
Phone +34 / 93 / 479 30 80
Fax +34 / 93 / 479 30 86
info.es@ifm-electronic.com
www.ifm-electronic.es

Sweden
ifm electronic ab
Hallavägen 10
512 60 Överlida
Office Gothenburg:
Drakegatan 6
41250 Gothenburg
Phone +46 / 325 / 66 15 00
Phone +46 / 325 / 66 15 50
Fax +46 / 325 / 66 15 90
info.se@ifm-electronic.com
www.ifm-electronic.se

Switzerland
ifm electronic ag
Altgraben 27
4624 Härkingen
Phone +41 / 62 / 388 80 30
Fax +41/ 62 / 388 80 39
info.ch@ifm-electronic.com
www.ifm-electronic.ch

Syria
I.E.C. Industrial Engineering Center
P.O. Box 15
Sehnaya, Damascus
Syria
Tel. + 963 11 532 13 19
Fax. + 963 11 442 12 27
info@iec-automation.com

Thailand
Sang Chai Meter Co., Ltd.
694/23-26 Phaholyothin Road
Samsen Nai, Phayathai
Bangkok 10400
Phone +66 / 2 / 616 8031
Fax +66 / 2 / 616 8050
scmth@ksc9.th.com

Turkey
ifm electronic Ltd. Sti.
Perpa Ticaret
Merkezi Elektrokent
A Blok Kat:11 NO: 1557/1559
34384 Okmeydani/ Istanbul
Telefon +90 / 212 / 210 5080
Faks +90 / 212 / 221 7159
info.tr@ifm-electronic.com

Ukraina
ifm electronic
Mariny Raskovoj 11
02660 Kiev
Ukraine
Phone +380 44 501 8543
Fax +380 44 501 8543
info.ua@ifm-electronic.com
www.ifm-electronic.ua

United Arab Emirates – Dubai
Noor Al-Shomoe Electrical Equipments Est.
P.O.Box. 64052
Unit no. 36
Reef Real Estate
Jebel Ali Industrial Area no. 3
Dubai
United Arab Emirates.
Phone. + 971 4 880 3838
Fax.+ 971 4 880 3883
Mobile: + 971 505084834
alshomoe@emirates.net.ae
www.nooralshomoe.com

United Arab Emirates – Abu Dhabi
Al Injazat Technical Trading Services
P.O. Box 42895
Abu Dhabi
United Arab Emirates
Phone +971 2 622 6030
Fax +971 2 622 3050
kamran@injazat.ae

United Kingdom
ifm electronic Ltd.
efector House
Kingsway Business Park
Oldfield Road
Hampton
Middlesex TW12 2HD
Phone +44 / 20 / 8213 0000
Fax +44 / 20 / 8213 0001
enquiry_gb@ifm-electronic.com
www.ifm-electronic.co.uk

USA
efector inc.
805 Springdale Drive
Exton, PA 19341
Phone +1 / 610 524 2000
Fax +1 / 610 524 2010
info@ifmefector.com
www.ifmefector.com

Venezuela
Petrobornas, C.A.
Zona Industrial Los Pinos
Avda. Principal UD 304
C. C. Los Pinos - Local "E"
(8015) - Puerto Ordaz - Edo. Bolivar
Venezuela
Phone +58 / 286 / 717 31 52
Fax +58 / 286 / 717 31 34
tyagem@cantv.net

Vietnam
Thien Viet Electrical Service and Trading Co., Ltd.
784 Dien Bien Phu Str.
Ward 11, Dist. 10
Ho-Chi–Minh-City, Viet Nam
Phone +84 / 8 / 830 9916
Fax +84 / 8 / 830 9915
thivicoltd@hcm.vnn.vn

Visit our website: www.ifm-electronic.com

visit our website:

www.ifm-electronic.com

Overview ifm main catalogues:

Position sensors and object recognition

- Inductive sensors
- Capacitive sensors
- Magnetic sensors, cylinder sensors
- Safety technology
- Valve sensors
- Photoelectric sensors
- Object recognition
- Encoders
- Evaluation systems, power supplies
- Connection technology

Fluid sensors and diagnostic systems

- Level sensors
- Flow sensors
- Pressure sensors
- Temperature sensors
- Diagnostic systems
- Evaluation systems, power supplies
- Connection technology

Bus systems

- Bus system AS-interface
- Power supplies
- Connection technology

Identification systems

- DataMatrix code-reading systems
- RF-identification systems
- Power supplies
- Connection technology

Control systems

- Control systems for mobile vehicles
- Connection technology

ifm electronic – close to you!

ifm article no. 7511239 · Printed in Germany on non-chlorine paper.
We reserve the right to make technical alterations without prior notice. · 01.2008