FYTWK 30 YTH

This bearing unit will be discontinued at the end of 2019, and new unit series F2BC is already available as its replacement.

Compliance with standard	ISO
Housing material	Composite for the SKF Food Line
Sealing solution	Multiple seals

Dimensions

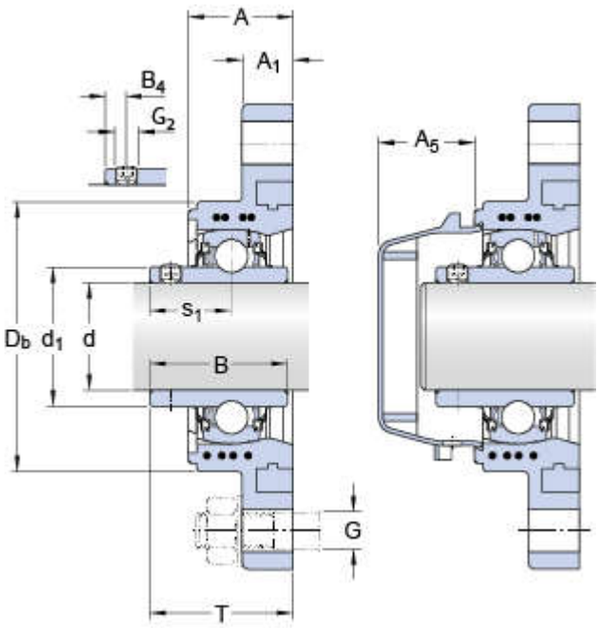

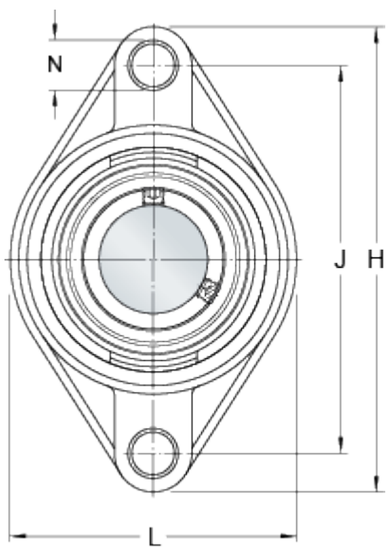

d		30	mm
d_1	≈	39.7	mm
D_b		78	mm
A		33	mm
A_1		15	mm
A_5		30.5	mm
B		38.1	mm
B_4		5	mm
J		116.5	mm
H		142.5	mm
L		83	mm
N		12.3	mm
s_1		22.2	mm
T		42.2	mm

Calculation data

Basic dynamic load rating	C	16.3	kN
Basic static load rating	C_0	11.2	kN
Fatigue load limit	P_u	0.475	kN
Limiting speed (with shaft tolerance h6)		3800	r/min

Mass

Mass bearing unit		0.46	kg

Mounting information

Thread grub screw	G_2	M6x0.75	
Hexagonal key size for grub screw	N	3	mm
Recommended tightening torque for grub screw		4	N·m
Recommended diameter for attachment bolts, mm	G	10	mm
Recommended diameter for attachment bolts, inch	G	0.375	in

Included products

Housing	FYTWK 506 Y
Bearing	YAR 206-2RF/HV

Associated products

End cover	ECW 206