escap 22V28

Precious metal commutation system - 9 segments

D.C. Motor
4.2 Watt

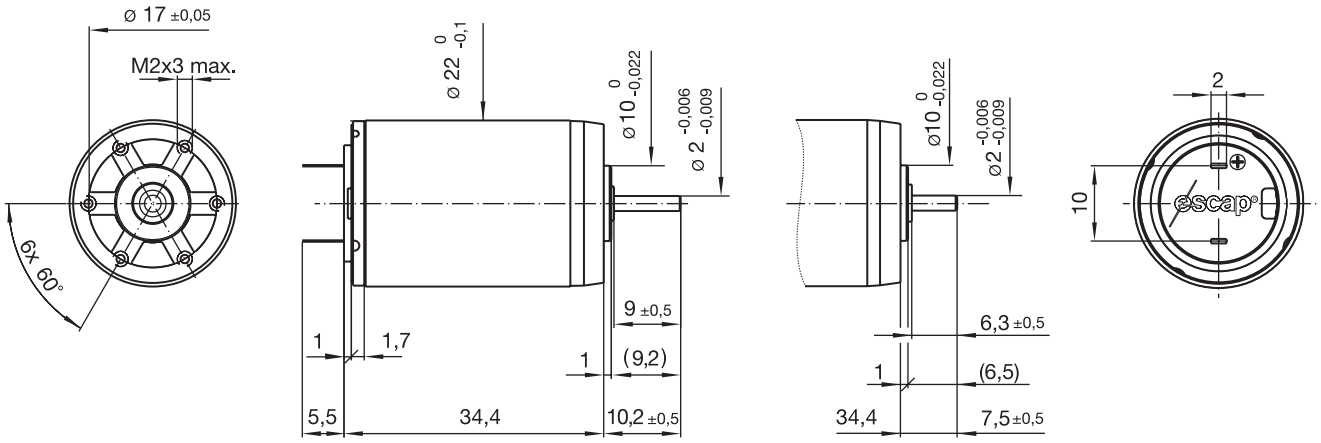

scale : 1:1
dimensions in mm
mass : 68 g

22V28 ▪▪▪▪ • 201

22V28 ▪▪▪▪ • 202

Winding types	▪▪▪▪	-216P	-213P	-216E	-213E	-210E	-208E
Measured values							
1 Measuring voltage	V	4.5	6.0	9.0	12.0	15.0	24.0
2 No-load speed	rpm	6400	7100	6700	7600	7500	6300
3 Stall torque	mNm (oz-in)	18.2 (2.59)	16.0 (2.27)	17.1 (2.42)	15.0 (2.13)	11.5 (1.63)	11.5 (1.62)
4 Average no-load current	mA	18	15	9	7.6	6.0	3.2
5 Typical starting voltage	V	0.06	0.08	0.10	0.15	0.15	0.20
Max. recommended values							
6 Max. continuous current	A	1.55	1.15	0.77	0.58	0.40	0.23
7 Max. continuous torque	mNm (oz-in)	10.27(1.45)	9.09 (1.29)	9.66 (1.37)	8.48 (1.20)	7.4 (1.05)	8.13 (1.15)
8 Max. angular acceleration	10^3 rad/s^2	66	71	62	66	64	85
Intrinsic parameters							
9 Back-EMF constant	V/1000 rpm	0.70	0.84	1.33	1.56	1.97	3.75
10 Torque constant	mNm/A (oz-in/A)	6.7 (0.95)	8.0 (1.13)	12.7 (1.80)	14.9 (2.11)	18.8 (2.66)	35.8 (5.07)
11 Terminal resistance	ohm	1.65	3.00	6.70	11.9	24.5	75.0
12 Motor regulation R/k^2	10^3/Nms	37	47	42	54	69	58
13 Rotor inductance	mH	0.10	0.15	0.50	0.55	0.80	3.30
14 Rotor inertia	kgm^2 . 10^{-7}	3.90	3.20	3.90	3.20	2.90	2.40
15 Mechanical time constant	ms	14	15	16	17	20	14

Availability: see enclosed document at the end of the catalogue

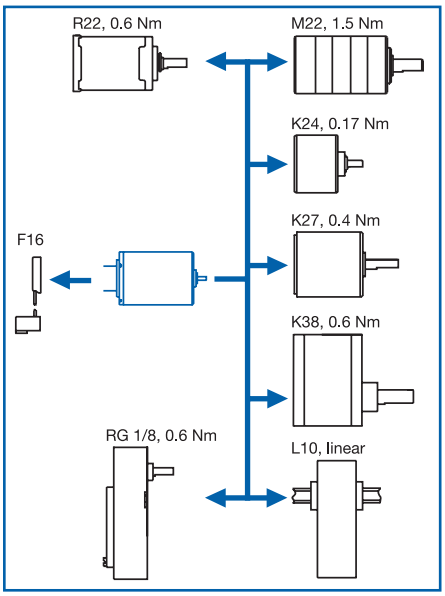

- Thermal resistance :
  rotor-body 6 °C/W
  body-ambient 20 °C/W
- Thermal time constant - rotor / stator :
  10 s / 460 s
- Max. rated coil temperature : 100°C (210°F)
- Recom. ambient temperature range :
  -30 °C to +65 °C (-22 °F to +150 °F)
- Viscous damping constant :
  0.05 x 10^{-6} Nms
- Max. axial static force for press-fit : 150 N
- End play : ≤ 150 µm
  Radial play : ≤ 30 µm
  Shaft runout : ≤ 10 µm
- Max. side load at 5 mm from mounting face
  - sleeve bearings 3 N
  - ball bearings 6 N
- Motor fitted with sleeve bearings
  (ball bearings optional)

Max. recommended speed

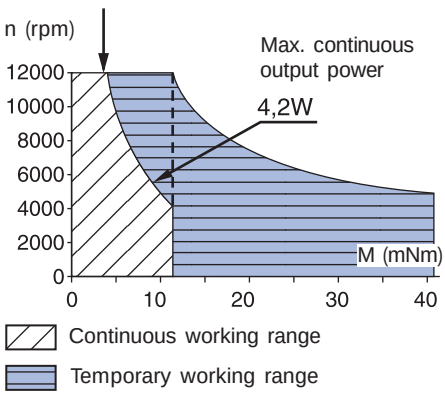

© API Portescap

Specifications subject to change without prior notice