NH fuse-links aM 690VAC

double indicator/live tags size 000, 00, 0, 1, 2, 3

LOW VOLTAGE IEC FUSES

IEC NH FUSE-LINKS



The NH system is classified among plug-in fuse systems and is composed of:

- fuse-base (possibly including terminal covers and phase barriers)
- fuse-link with blade contact
- fuse-link replacement device (LV HRC fuse puller)

Since the design of this system cannot guarantee non-interchangeability of rated current it must be handled by a qualified professional.

Type “aM” NH fuse-links are partial-range breaking capacity fuse-links, used to protect motor circuits as they are strongly current-limiting and have low power losses. They interrupt currents from 6.3 times In up to their maximum breaking capacity and are therefore suited for short-circuit protection only. They must be associated with other switchgear for protection against overloads. These fuse-links can have a rated current equal to the motor’s nominal current.

TECHNICAL DATA OVERVIEW

Voltage AC	690 VAC
Ampere Range (A)	2 ... 500 A
Size per Standard	000, 00, 0, 1, 2, 3
Speed/Characteristic	aM
I.R. AC	80 kA
Body Material	ceramic
Contact Materials	copper, silver-plated

FEATURES & BENEFITS

- Dimensions according to DIN 43 620 parts 1 to 4
- Non-isolated gripping lugs
- Double indicator
- Lead free contact blades
- 0% cadmium

APPLICATIONS

- aM: Partial purpose, motor circuit protection

STANDARDS

- VDE 0636 Part 201
- IEC 60269-1 and -2

CE

MERSEN reserves the right to change, update or correct, without notice, any information contained in this datasheet.

PRODUCT RANGE



NH000AM69V10

Size 000

Catalog number	Reference number	Rated voltage AC (IEC)	Rated current I_n	Power dissipation at In	Weight	Package
NH000AM69V2	P227851	690 V	2 A	0.1 W	0.133 kg	3
NH000AM69V4	Q227852	690 V	4 A	0.2 W	0.133 kg	3
NH000AM69V6	R227853	690 V	6 A	0.3 W	0.133 kg	3
NH000AM69V10	S227854	690 V	10 A	0.5 W	0.133 kg	3
NH000AM69V16	T227855	690 V	16 A	0.7 W	0.133 kg	3
NH000AM69V20	V227856	690 V	20 A	0.9 W	0.133 kg	3
NH000AM69V25	W227857	690 V	25 A	1.2 W	0.133 kg	3
NH000AM69V32	X227858	690 V	32 A	1.5 W	0.133 kg	3
NH000AM69V35	Y227859	690 V	35 A	1.6 W	0.133 kg	3
NH000AM69V40	Z227860	690 V	40 A	1.8 W	0.133 kg	3
NH000AM69V50	A227861	690 V	50 A	2.3 W	0.133 kg	3
NH000AM69V63	B227862	690 V	63 A	2.9 W	0.133 kg	3



NH00AM69V125

Size 00

Catalog number	Reference number	Rated voltage AC (IEC)	Rated current I_n	Power dissipation at In	Weight	Package
NH00AM69V50	D227864	690 V	50 A	2.3 W	0.2 kg	3
NH00AM69V63	E227865	690 V	63 A	2.9 W	0.2 kg	3
NH00AM69V80	F227866	690 V	80 A	3.6 W	0.2 kg	3
NH00AM69V100	G227867	690 V	100 A	5.2 W	0.2 kg	3
NH00AM69V125	H227868	690 V	125 A	6.4 W	0.2 kg	3



NH0AM69V160

Size 0

Catalog number	Reference number	Rated voltage AC (IEC)	Rated current I_n	Power dissipation at In	Weight	Package
NH0AM69V6	K227870	690 V	6 A	0.3 W	0.26 kg	3
NH0AM69V10	L227871	690 V	10 A	0.5 W	0.26 kg	3
NH0AM69V16	M227872	690 V	16 A	0.8 W	0.26 kg	3
NH0AM69V20	N227873	690 V	20 A	1 W	0.26 kg	3
NH0AM69V25	P227874	690 V	25 A	1.3 W	0.26 kg	3
NH0AM69V32	Q227875	690 V	32 A	1.6 W	0.26 kg	3
NH0AM69V35	R227876	690 V	35 A	1.7 W	0.26 kg	3
NH0AM69V40	S227877	690 V	40 A	2 W	0.26 kg	3
NH0AM69V50	T227878	690 V	50 A	2.8 W	0.26 kg	3
NH0AM69V63	V227879	690 V	63 A	3.4 W	0.26 kg	3
NH0AM69V80	W227880	690 V	80 A	4.9 W	0.26 kg	3
NH0AM69V100	X227881	690 V	100 A	6 W	0.26 kg	3
NH0AM69V125	Y227882	690 V	125 A	7.9 W	0.26 kg	3
NH0AM69V160	Z227883	690 V	160 A	10.5 W	0.26 kg	3

MERSEN reserves the right to change, update or correct, without notice, any information contained in this datasheet.

PRODUCT RANGE



NH1AM69V250

Size 1

Catalog number	Reference number	Rated voltage AC (IEC)	Rated current I_n	Power dissipation at In	Weight	Package
NH1AM69V16	B227885	690 V	16 A	1 W	0.43 kg	3
NH1AM69V20	C227886	690 V	20 A	1.2 W	0.43 kg	3
NH1AM69V25	D227887	690 V	25 A	1.4 W	0.43 kg	3
NH1AM69V32	E227888	690 V	32 A	1.9 W	0.43 kg	3
NH1AM69V35	F227889	690 V	35 A	2 W	0.43 kg	3
NH1AM69V40	G227890	690 V	40 A	2.3 W	0.43 kg	3
NH1AM69V50	H227891	690 V	50 A	2.9 W	0.43 kg	3
NH1AM69V63	J227892	690 V	63 A	3.6 W	0.43 kg	3
NH1AM69V80	K227893	690 V	80 A	4.6 W	0.43 kg	3
NH1AM69V100	L227894	690 V	100 A	5.8 W	0.43 kg	3
NH1AM69V125	M227895	690 V	125 A	7.5 W	0.43 kg	3
NH1AM69V160	N227896	690 V	160 A	10.4 W	0.43 kg	3
NH1AM69V200	P227897	690 V	200 A	14.2 W	0.43 kg	3
NH1AM69V224	Q227898	690 V	224 A	15.8 W	0.43 kg	3
NH1AM69V250	R227899	690 V	250 A	17.5 W	0.43 kg	3



NH2AM69V400

Size 2

Catalog number	Reference number	Rated voltage AC (IEC)	Rated current I_n	Power dissipation at In	Weight	Package
NH2AM69V35	L227963	690 V	35 A	1.8 W	0.64 kg	3
NH2AM69V40	M227964	690 V	40 A	2.1 W	0.64 kg	3
NH2AM69V50	N227965	690 V	50 A	2.7 W	0.64 kg	3
NH2AM69V63	P227966	690 V	63 A	3.4 W	0.64 kg	3
NH2AM69V80	Q227967	690 V	80 A	4.4 W	0.64 kg	3
NH2AM69V100	R227968	690 V	100 A	5.5 W	0.64 kg	3
NH2AM69V125	S227969	690 V	125 A	6.4 W	0.64 kg	3
NH2AM69V160	T227970	690 V	160 A	9.3 W	0.64 kg	3
NH2AM69V200	V227971	690 V	200 A	11.3 W	0.64 kg	3
NH2AM69V224	W227972	690 V	224 A	12.2 W	0.64 kg	3
NH2AM69V250	X227973	690 V	250 A	16.8 W	0.64 kg	3
NH2AM69V300	Y227974	690 V	300 A	21 W	0.64 kg	3
NH2AM69V315	Z227975	690 V	315 A	23.1 W	0.64 kg	3
NH2AM69V355	A227976	690 V	355 A	26.4 W	0.64 kg	3
NH2AM69V400	B227977	690 V	400 A	29.7 W	0.64 kg	3



NH3AM69V500

Size 3

Catalog number	Reference number	Rated voltage AC (IEC)	Rated current I_n	Power dissipation at In	Weight	Package
NH3AM69V250	D227979	690 V	250 A	14.6 W	1.05 kg	1
NH3AM69V300	E227980	690 V	300 A	21 W	1.05 kg	1
NH3AM69V315	F227981	690 V	315 A	21 W	1.05 kg	1
NH3AM69V355	G227982	690 V	355 A	23.3 W	1.05 kg	1
NH3AM69V400	H227983	690 V	400 A	29.1 W	1.05 kg	1
NH3AM69V425	J227984	690 V	425 A	29.1 W	1.05 kg	1
NH3AM69V450	K227985	690 V	450 A	34 W	1.05 kg	1
NH3AM69V500	L227986	690 V	500 A	42 W	1.05 kg	1

MERSEN reserves the right to change, update or correct, without notice, any information contained in this datasheet.

TECHNICAL DATA

	Size 000	Size 00	Size 0	Size 1	Size 2	Size 3
Rated current	2 ... 63 A	50 ... 125 A	6 ... 160 A	16 ... 250 A	35 ... 400 A	250 ... 500 A
Rated breaking capacity AC	80 kA	80 kA	80 kA	80 kA	80 kA	80 kA
Rated voltage AC	690 V	690 V	690 V	690 V	690 V	690 V
Indication System	double indicator	double indicator	double indicator	double indicator	double indicator	double indicator
Width	21 mm	30 mm	30 mm	40 mm	52 mm	72 mm

TIME CURRENT CHARACTERISTIC CURVES

Size 000

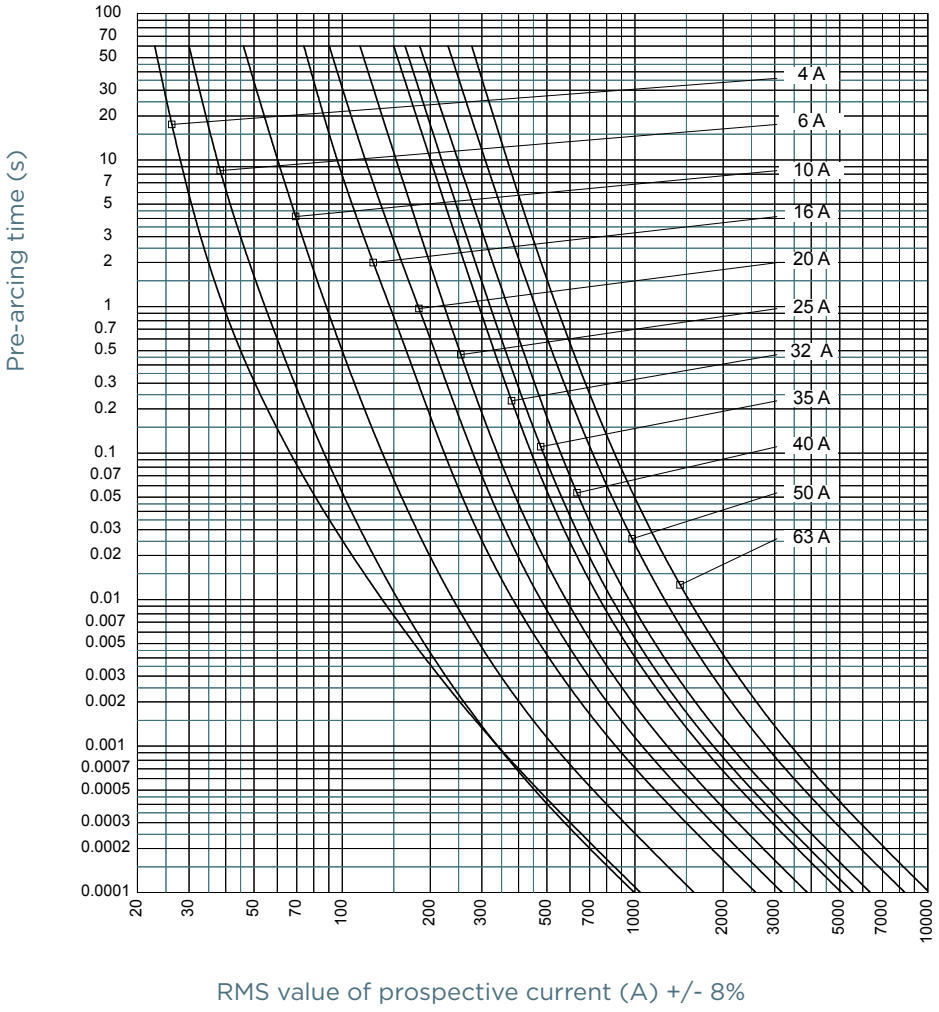

MERSEN reserves the right to change, update or correct, without notice, any information contained in this datasheet.

TIME CURRENT CHARACTERISTIC CURVES

Size 00

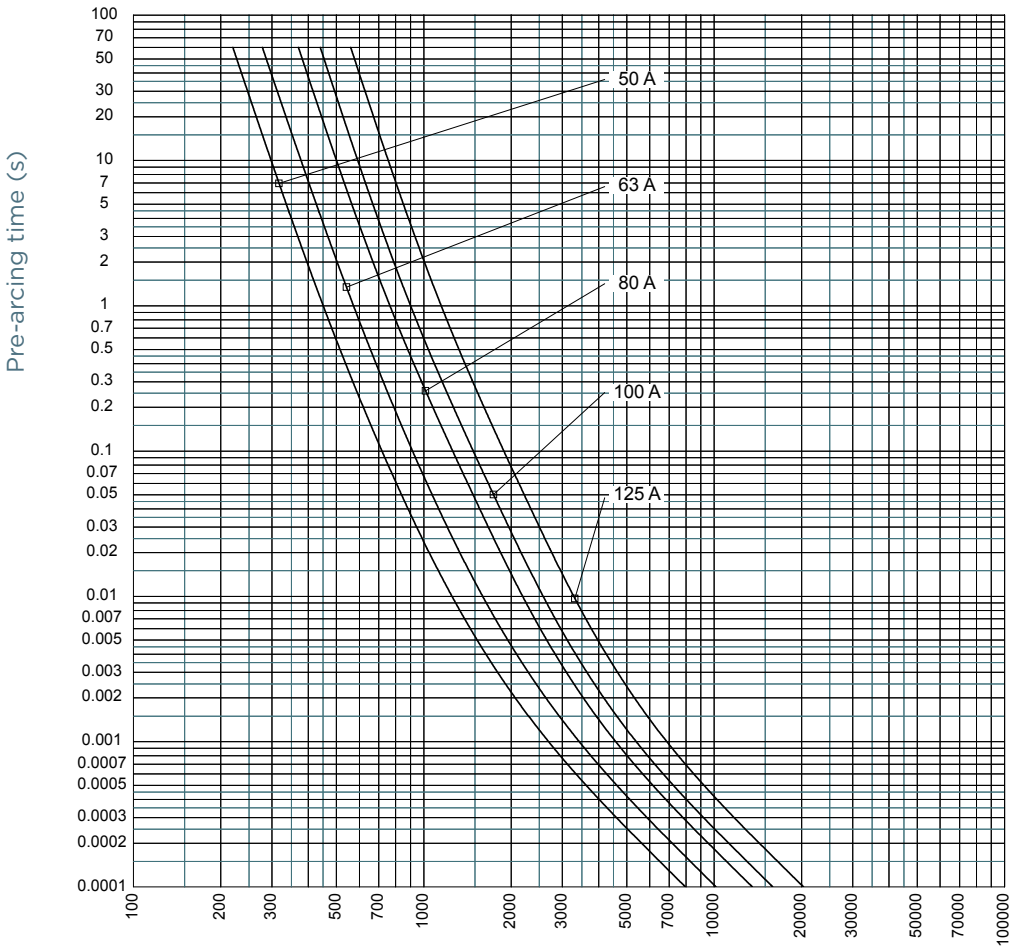

MERSEN reserves the right to change, update or correct, without notice, any information contained in this datasheet.

TIME CURRENT CHARACTERISTIC CURVES

Size 0

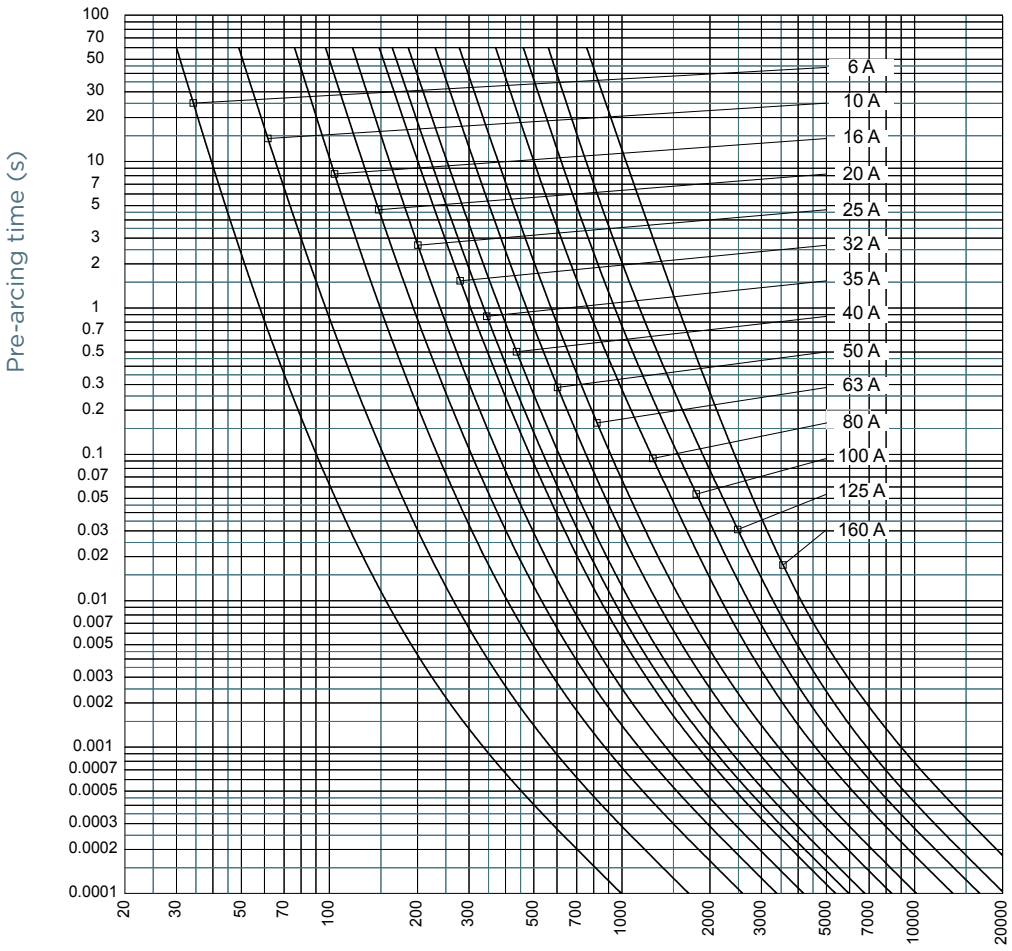

MERSEN reserves the right to change, update or correct, without notice, any information contained in this datasheet.

TIME CURRENT CHARACTERISTIC CURVES

Size 1

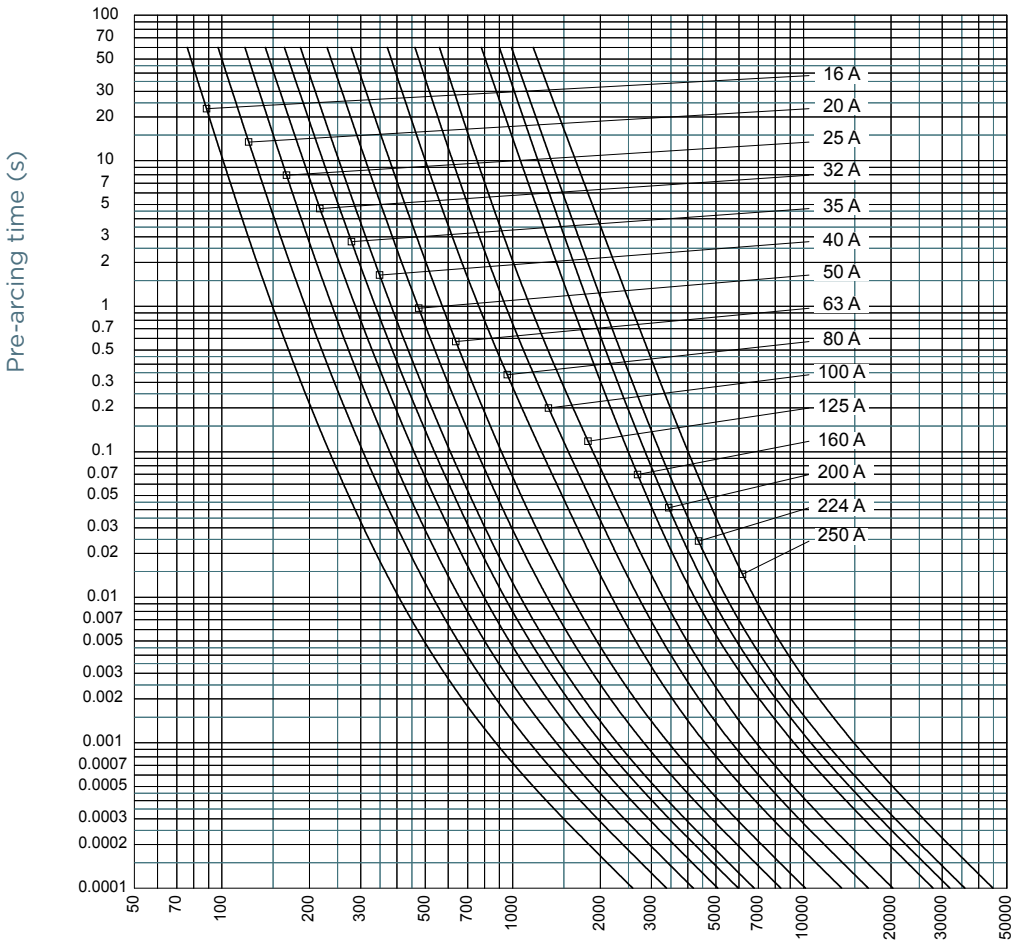

MERSEN reserves the right to change, update or correct, without notice, any information contained in this datasheet.

TIME CURRENT CHARACTERISTIC CURVES

Size 2

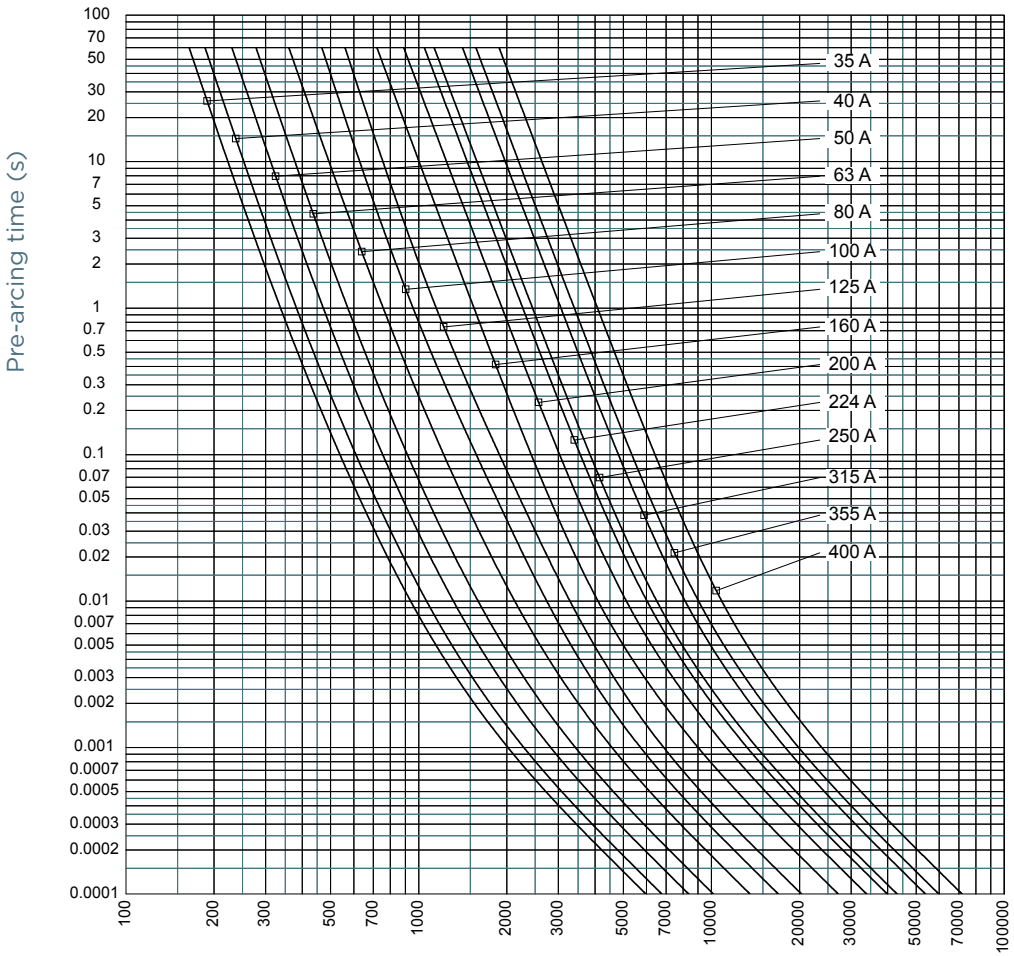

MERSEN reserves the right to change, update or correct, without notice, any information contained in this datasheet.

TIME CURRENT CHARACTERISTIC CURVES

Size 3

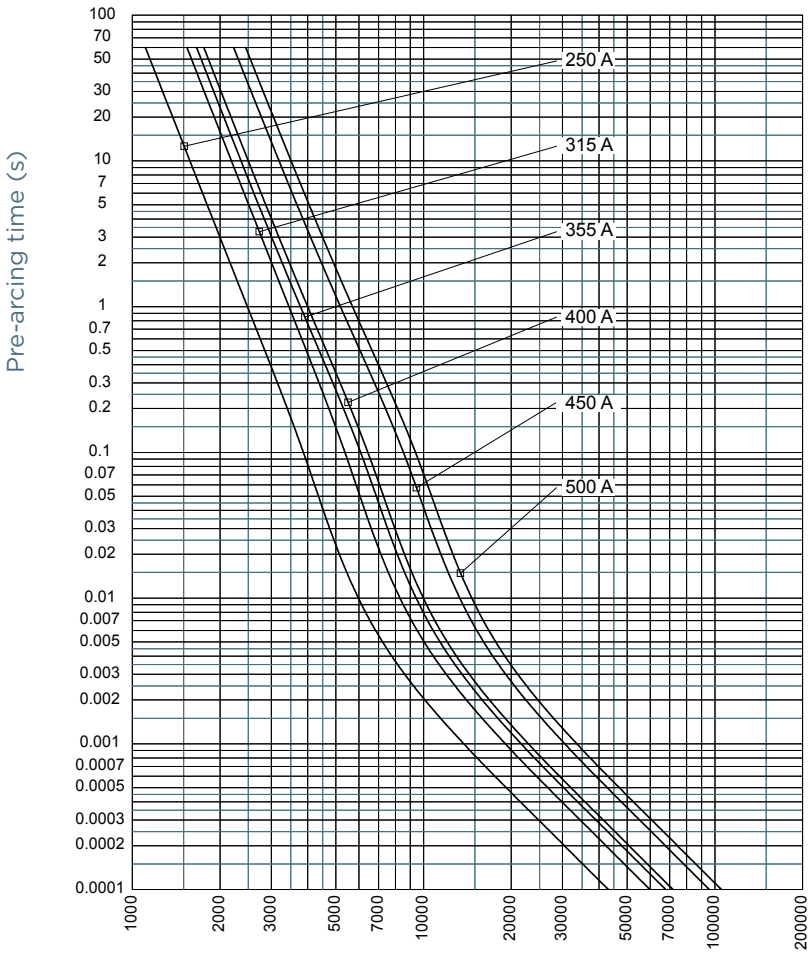

MERSEN reserves the right to change, update or correct, without notice, any information contained in this datasheet.

CUT-OFF CURRENT CHARACTERISTIC

Size 000

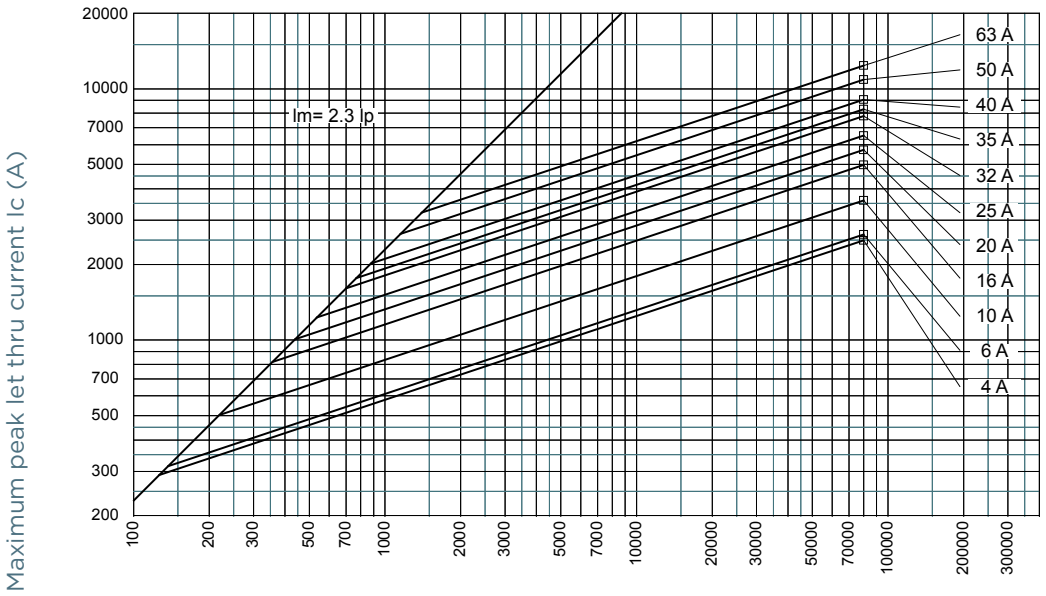

Size 00

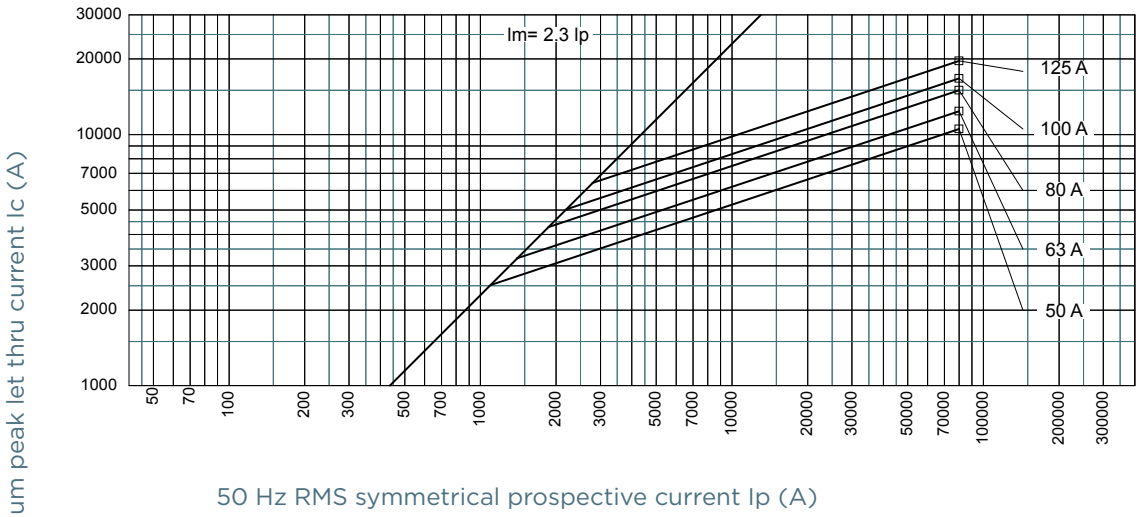

MERSEN reserves the right to change, update or correct, without notice, any information contained in this datasheet.

CUT-OFF CURRENT CHARACTERISTIC

Size 0

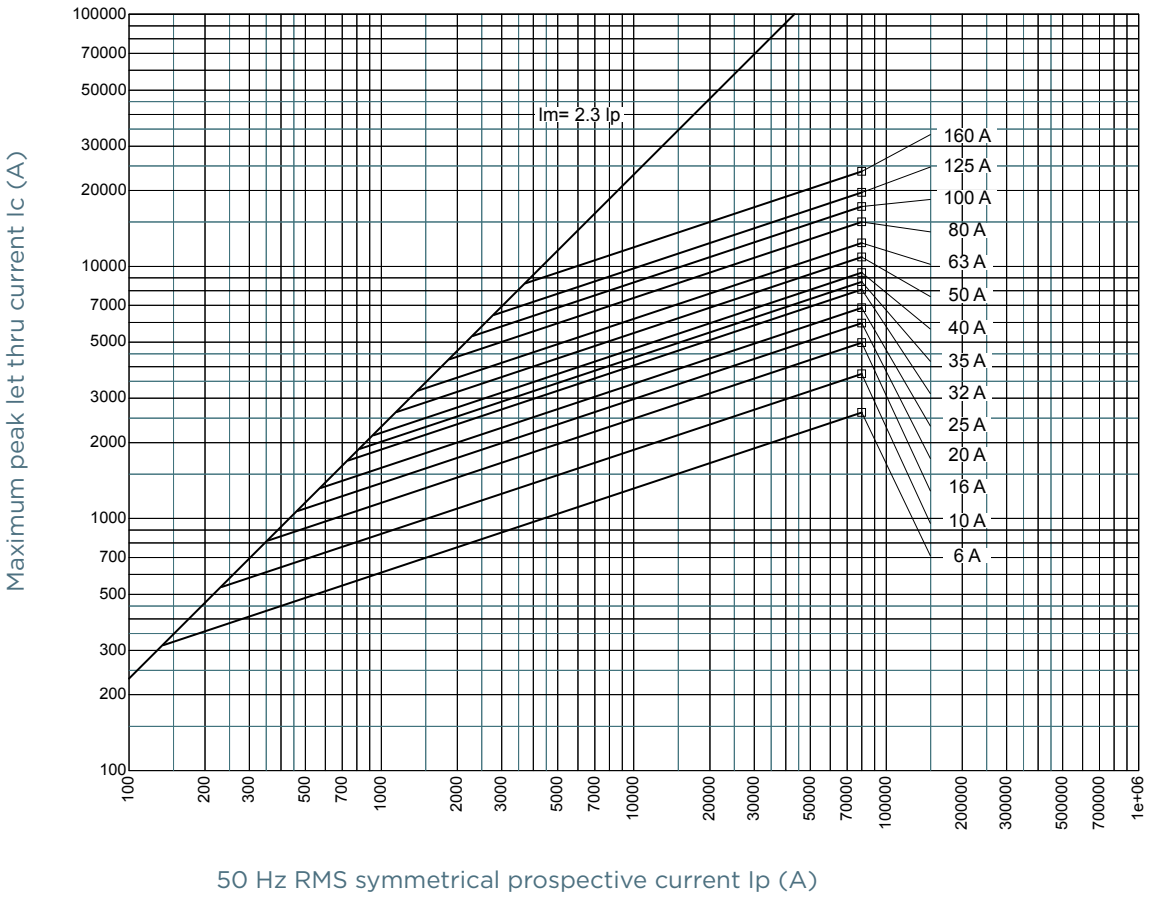

MERSEN reserves the right to change, update or correct, without notice, any information contained in this datasheet.

CUT-OFF CURRENT CHARACTERISTIC

Size 1

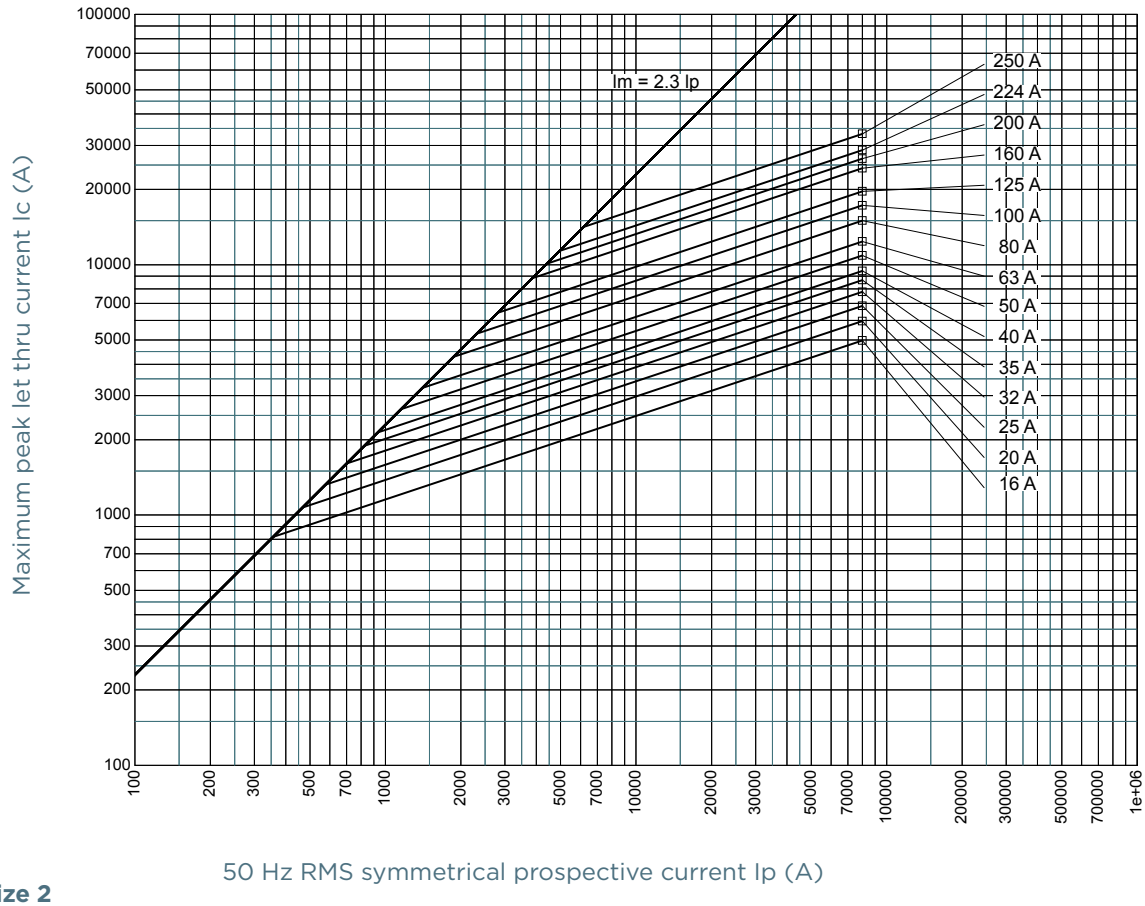

Size 2

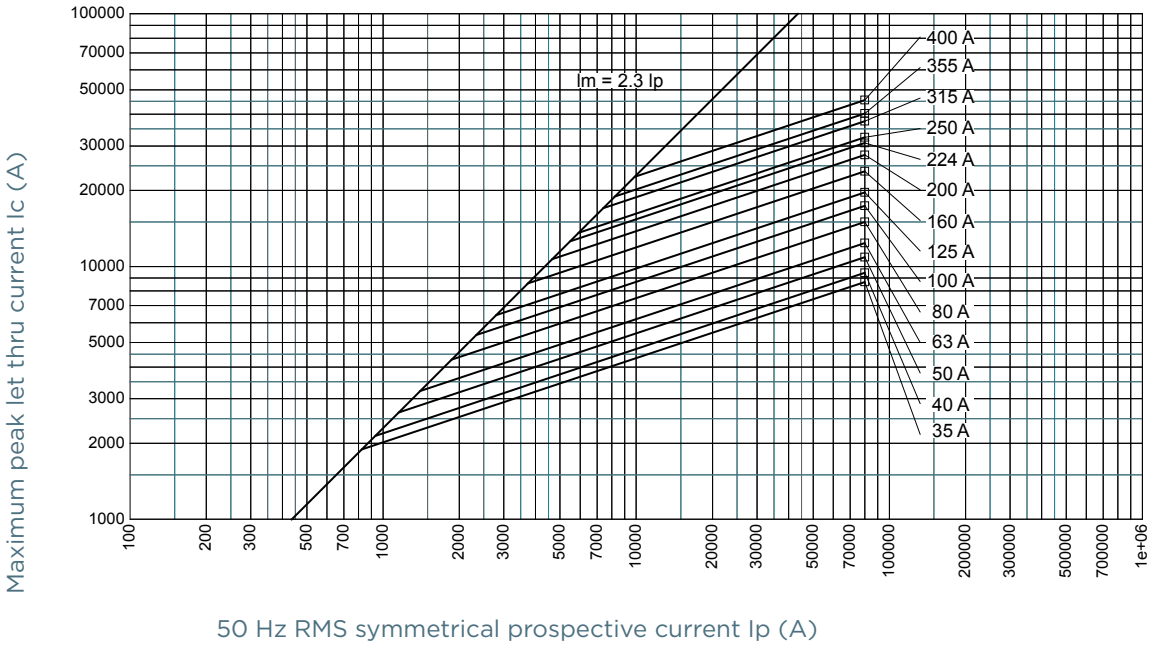

MERSEN reserves the right to change, update or correct, without notice, any information contained in this datasheet.

CUT-OFF CURRENT CHARACTERISTIC

Size 3

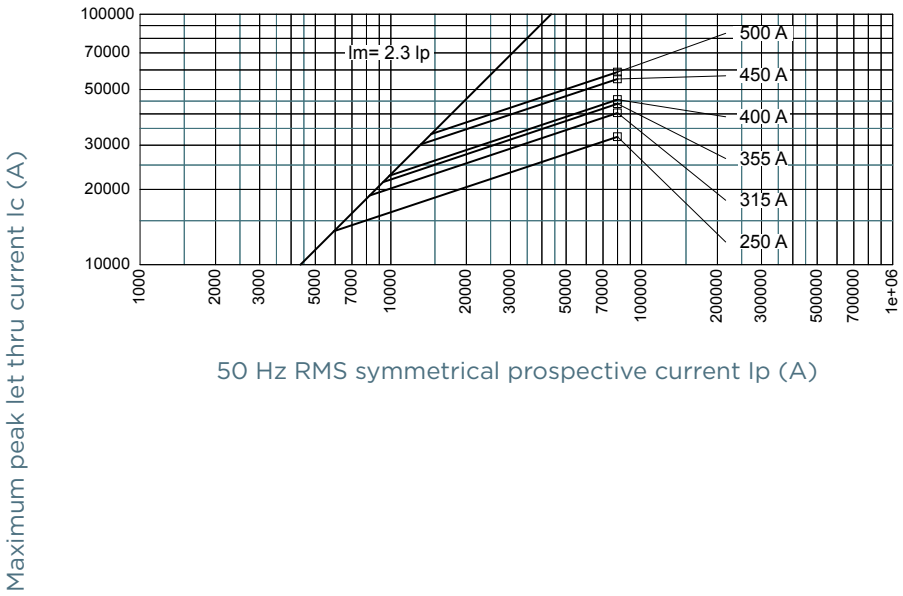

PRE-ARCING AND OPERATING I2T CHARACTERISTICS

Size 000

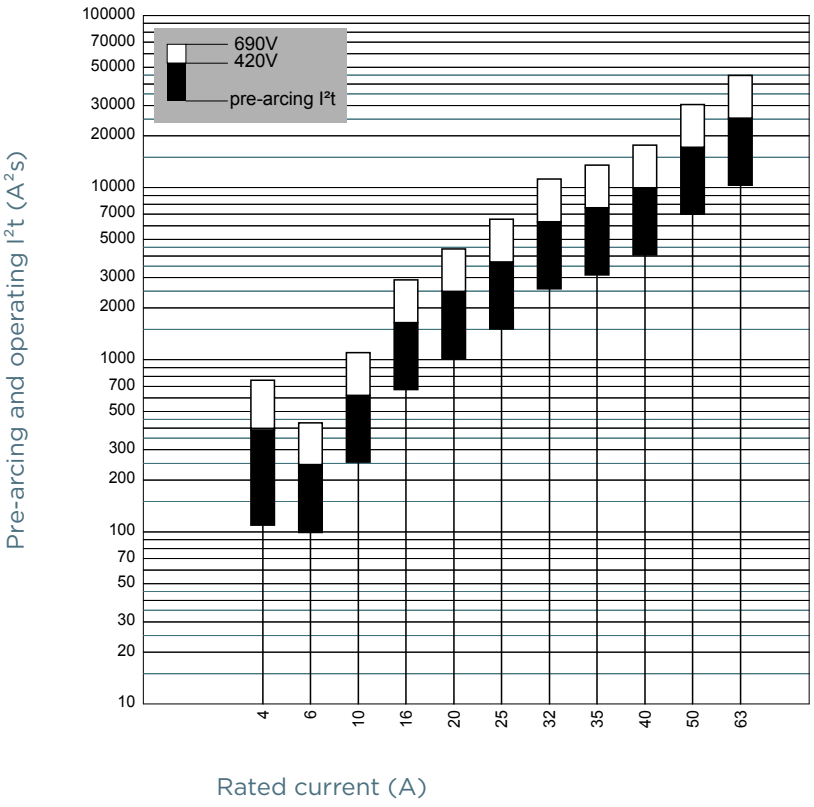

MERSEN reserves the right to change, update or correct, without notice, any information contained in this datasheet.

PRE-ARCING AND OPERATING I2T CHARACTERISTICS

Size 00

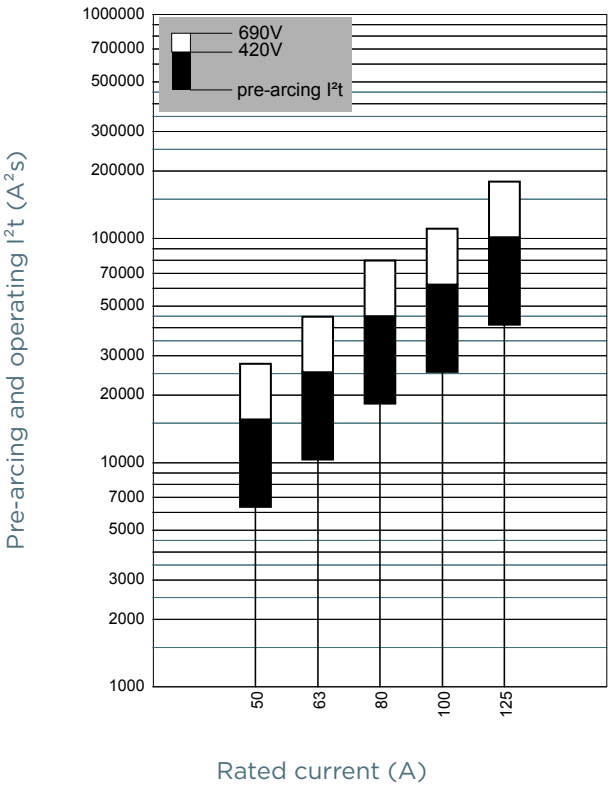

Size 0

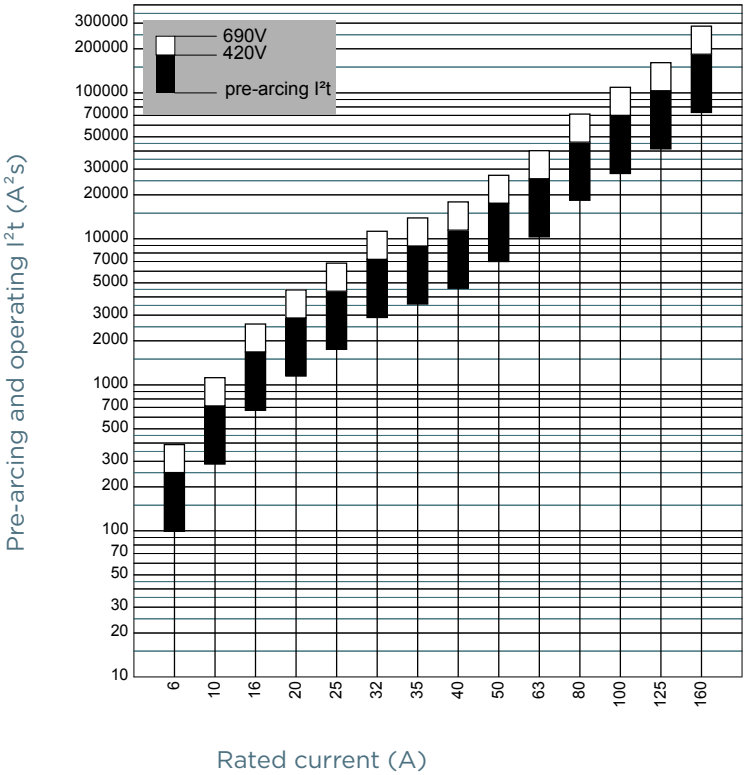

MERSEN reserves the right to change, update or correct, without notice, any information contained in this datasheet.

PRE-ARCING AND OPERATING I2T CHARACTERISTICS

Size 1

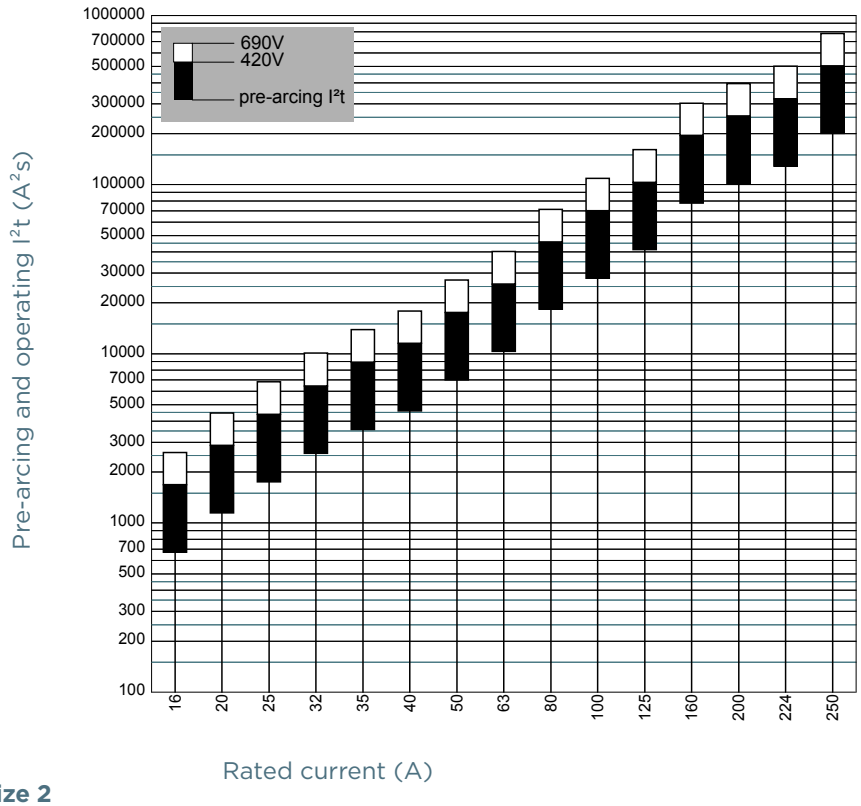

Size 2

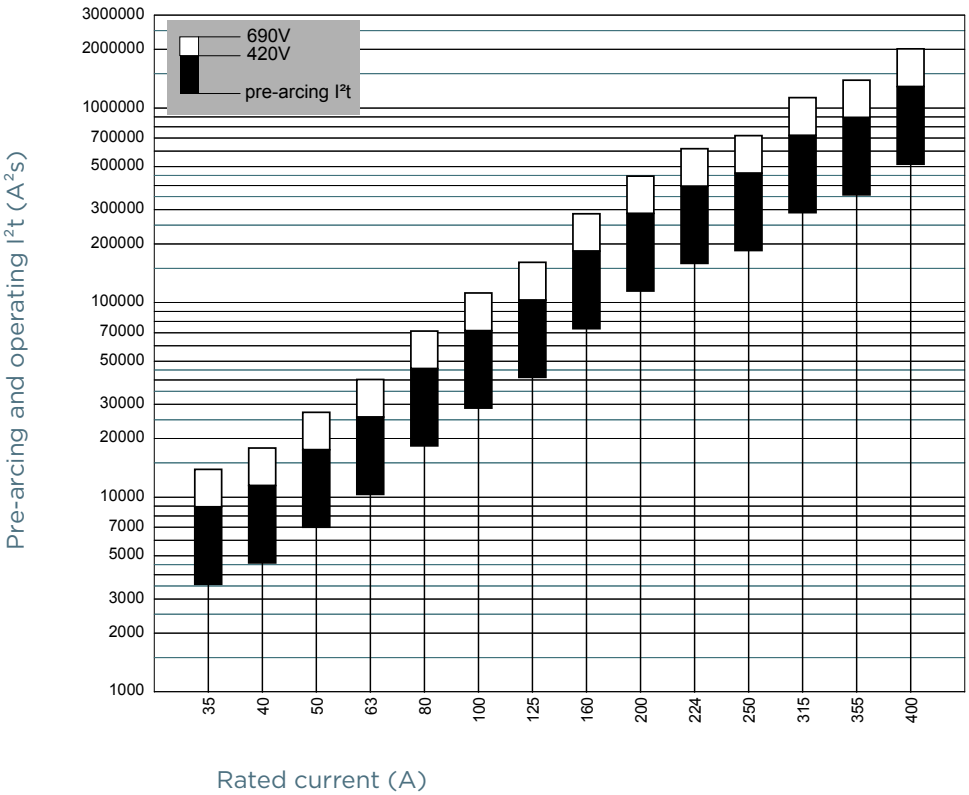

MERSEN reserves the right to change, update or correct, without notice, any information contained in this datasheet.

PRE-ARCING AND OPERATING I2T CHARACTERISTICS

Size 3

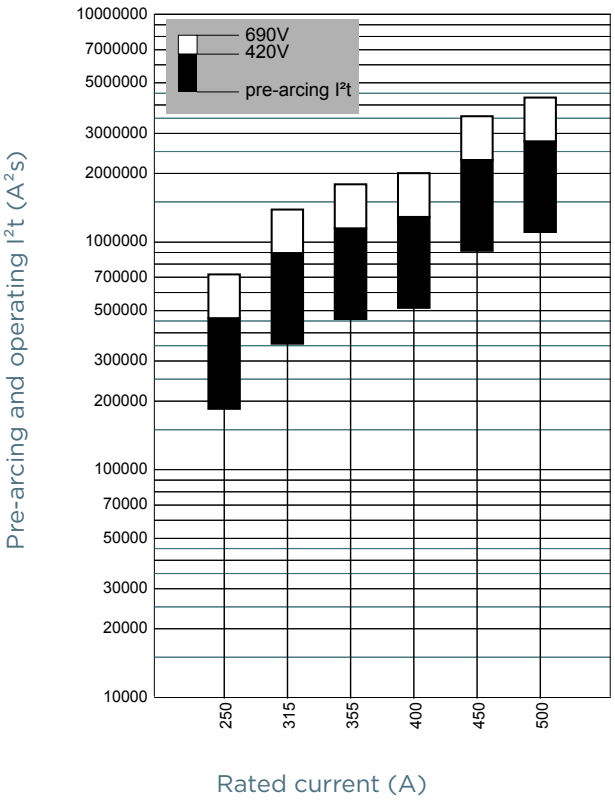

MERSEN reserves the right to change, update or correct, without notice, any information contained in this datasheet.

DIMENSIONS

size 000 with double indicator

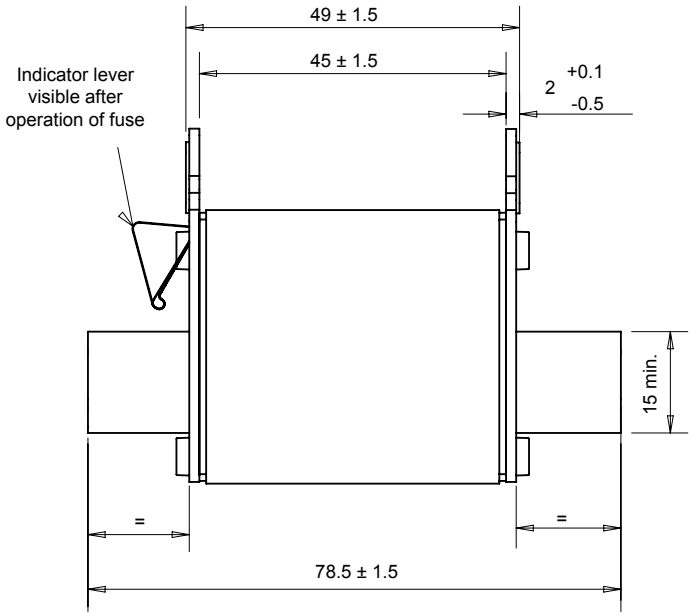

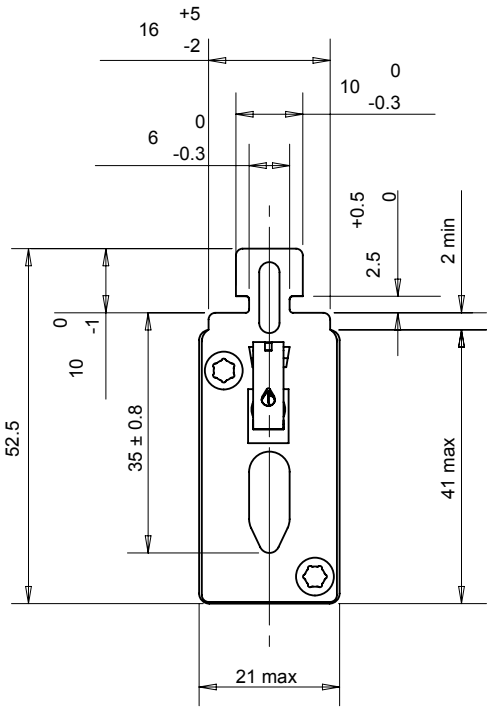

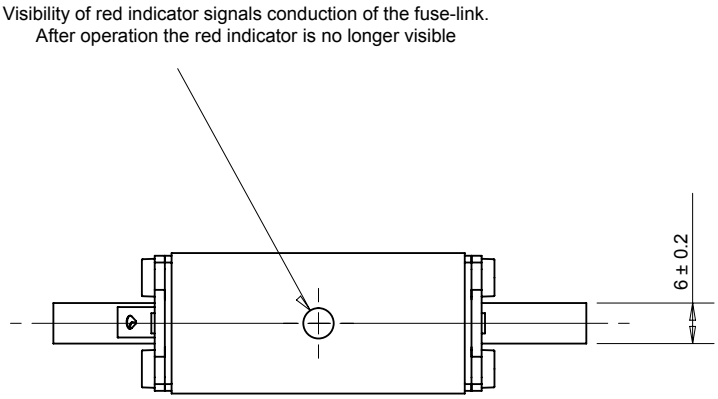

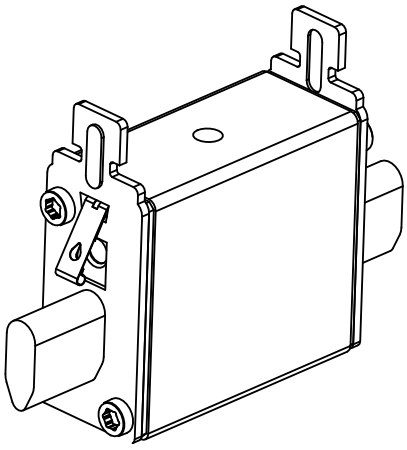

Dimensions in mm

MERSEN reserves the right to change, update or correct, without notice, any information contained in this datasheet.

DIMENSIONS

size 00 with double indicator

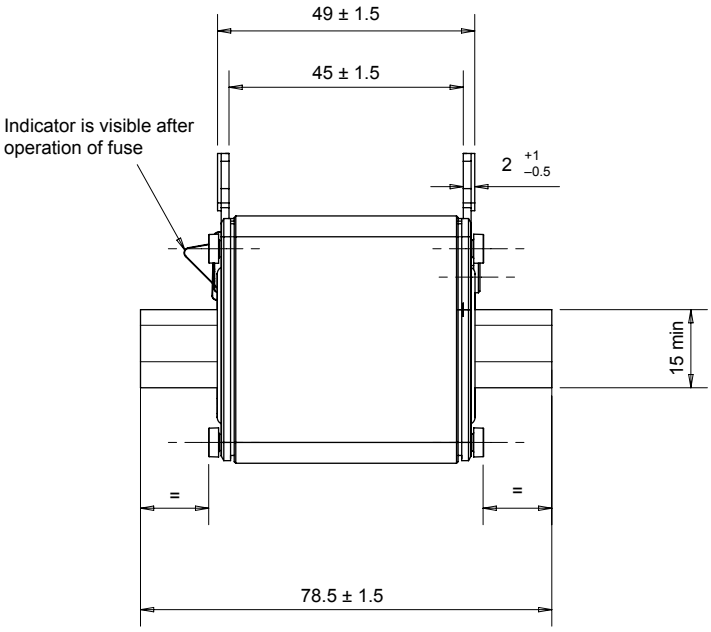

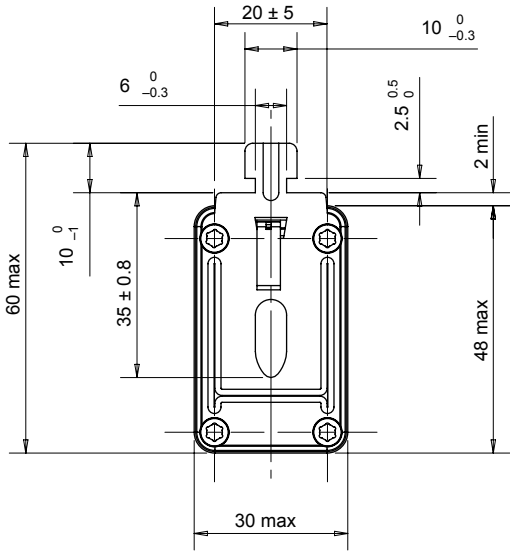

· Visibility of red indicator signals conduction of the fuse-link.
After operation the red indicator is no longer visible.

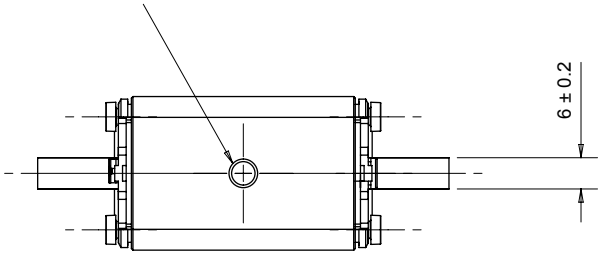

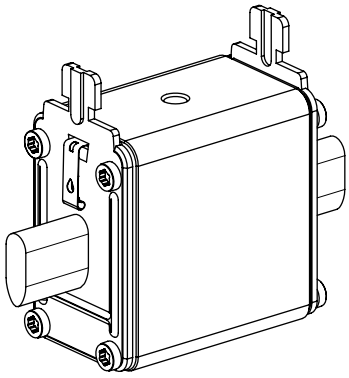

Dimensions in mm

MERSEN reserves the right to change, update or correct, without notice, any information contained in this datasheet.

DIMENSIONS

size 0 with double indicator

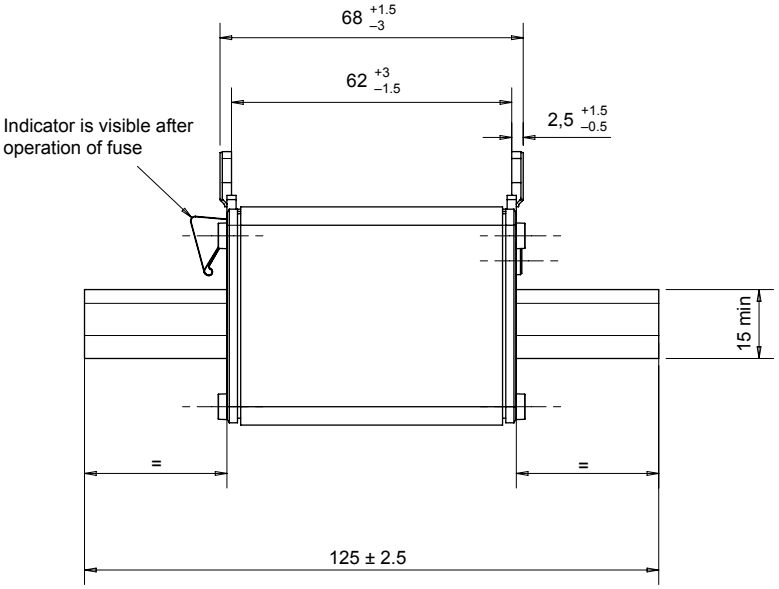

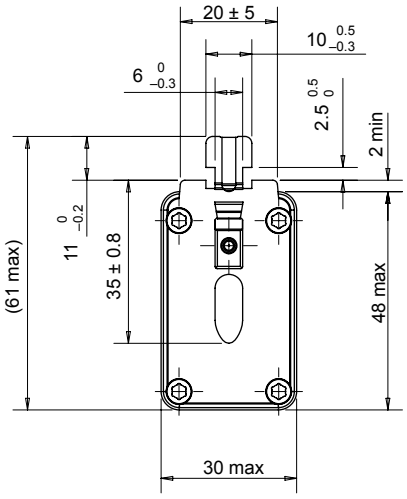

Visibility of red indicator signals conduction of the fuse-link.
After operation the red indicator is no longer visible.

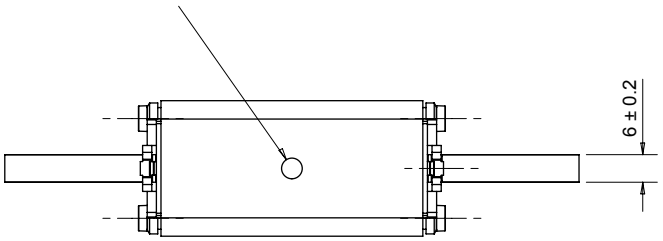

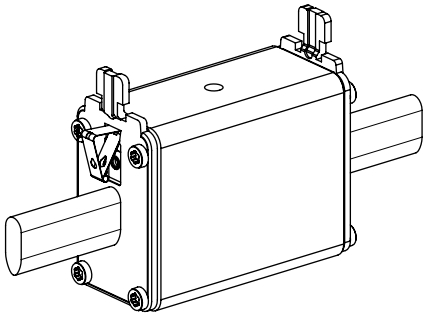

Dimensions in mm

MERSEN reserves the right to change, update or correct, without notice, any information contained in this datasheet.

DIMENSIONS

size 1 with double indicator

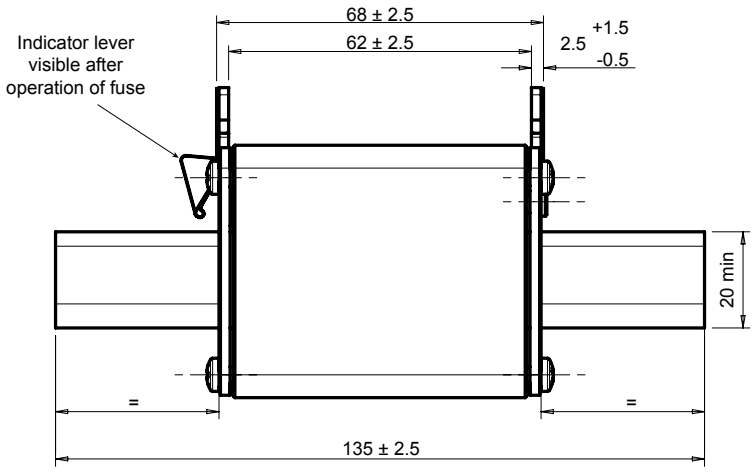

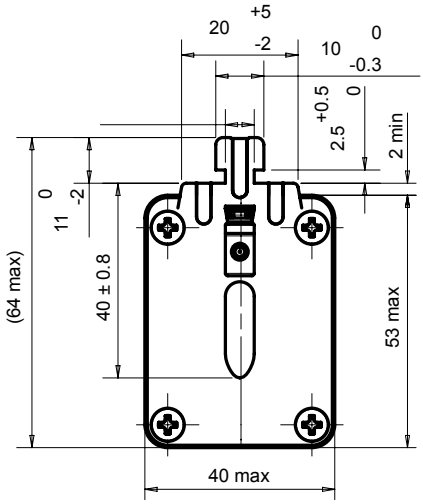

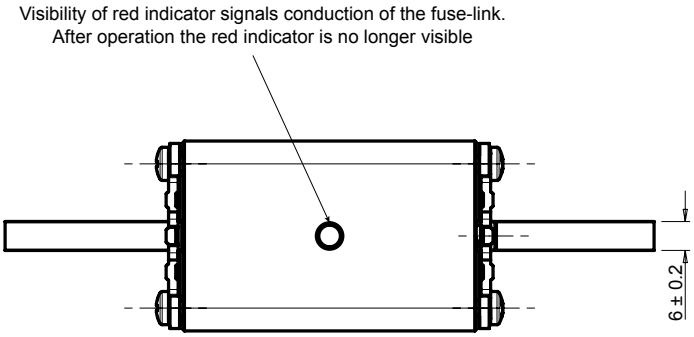

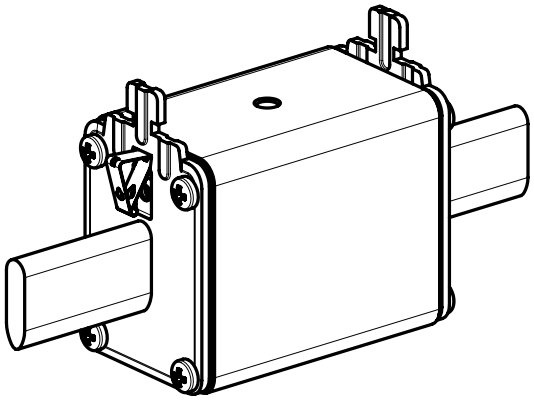

Dimensions in mm

MERSEN reserves the right to change, update or correct, without notice, any information contained in this datasheet.

DIMENSIONS

size 2 with double indicator

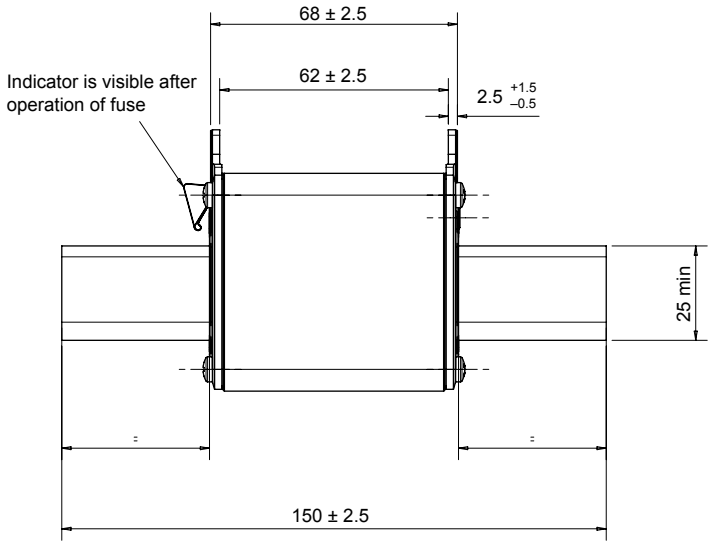

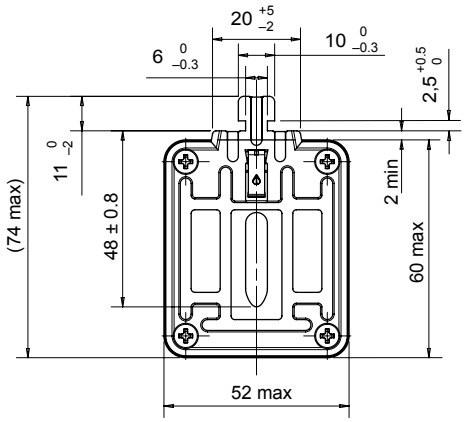

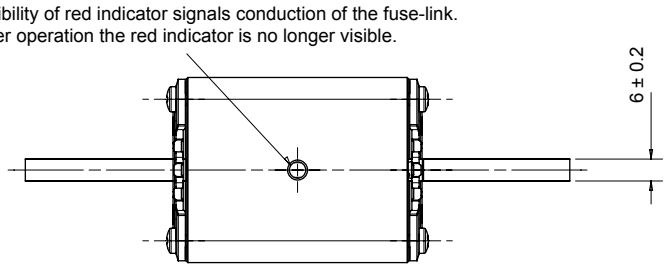

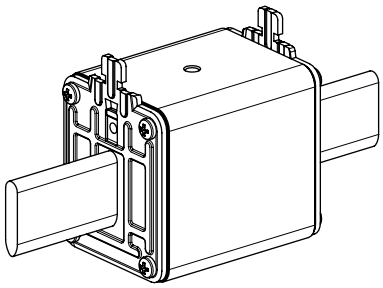

Dimensions in mm

MERSEN reserves the right to change, update or correct, without notice, any information contained in this datasheet.

DIMENSIONS

size 3 with double indicator

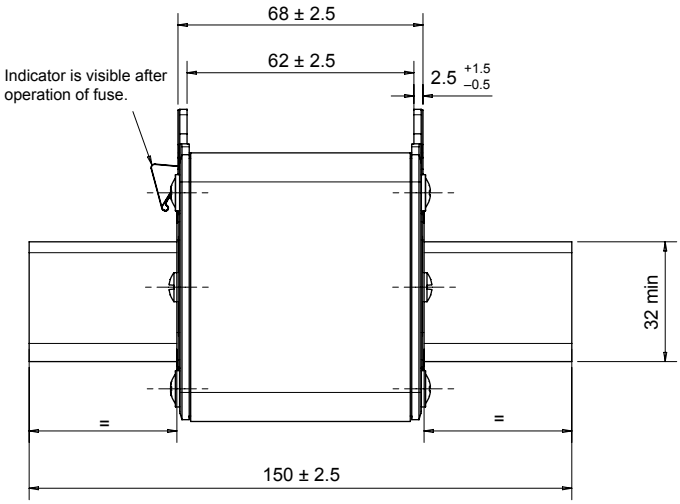

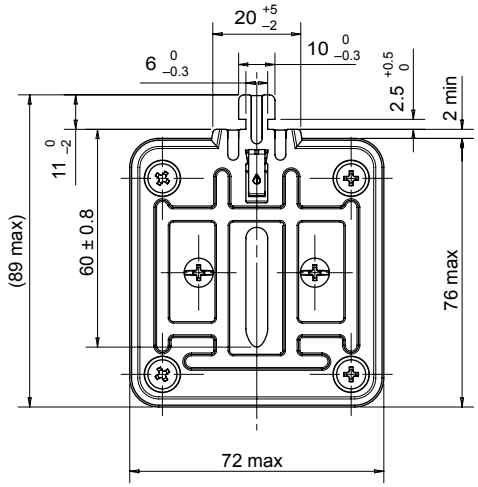

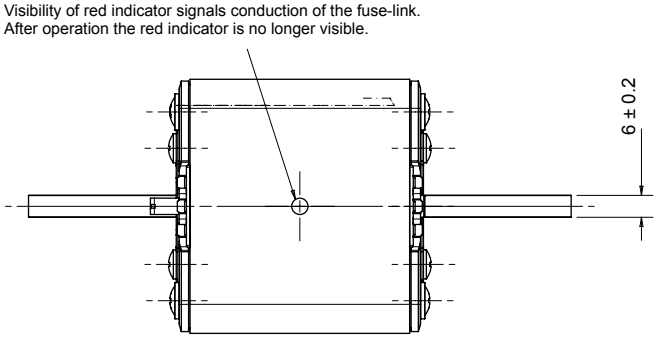

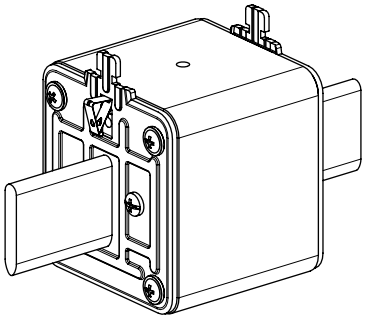

Dimensions in mm

MERSEN reserves the right to change, update or correct, without notice, any information contained in this datasheet.