E74220

AS-Interface flat cable

Flat cable 100 meter TPE red

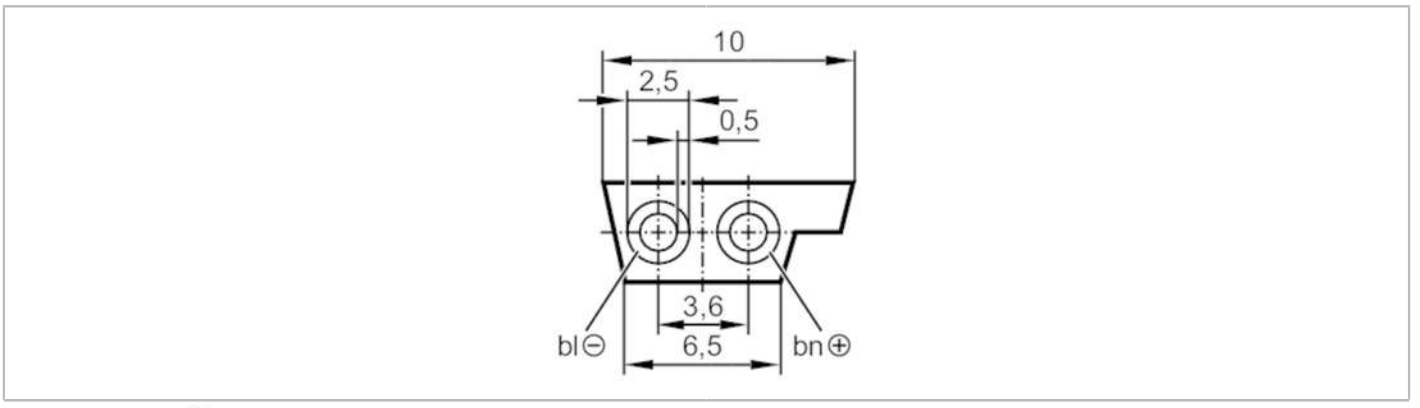

Electrical data		
Operating voltage	[V]	230 DC; (Peak voltage 300 V)
Operating conditions		
Ambient temperature	[°C]	-40...105
Ambient temperature (moving)	[°C]	-30...105
Mechanical data		
Weight	[g]	6960
Remarks		
Remarks		100 m form supplied: coiled
Pack quantity		100 m
Electrical connection		
Cable: 100 m, TPE, red; 2 x 1.5 mm²		