M12 female 90° with cable F&B Pro

TPE-S 5x0.34 bu robot+drag chain 1,5m

Plug Connectors for Food & Beverage
Female 90°
M12 F&B Pro
5-pole
Stainless steel 1.4404 (V4A)
without cable sleeves
IP69K

Further cable lengths on request. Plastic housings with good resistance against chemicals and oils. The resistance to aggressive media should be individually tested for your application. Further details on request.

Link to Product

Illustration

The information in this brochure has been compiled with the utmost care.
Liability for the correctness completeness and topicality of the information is restricted to gross negligence. Version: 01/20

stay connected



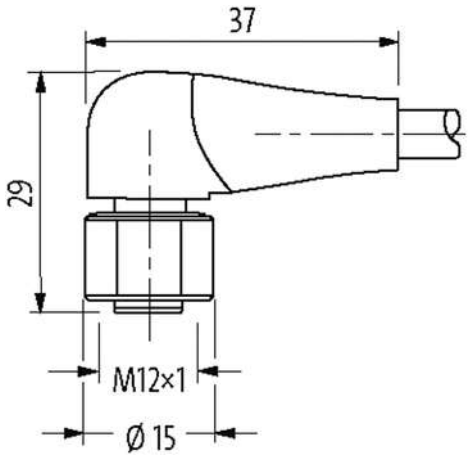

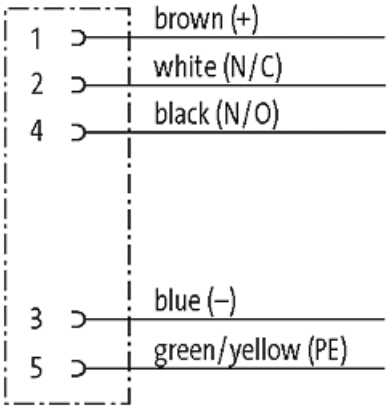

Female

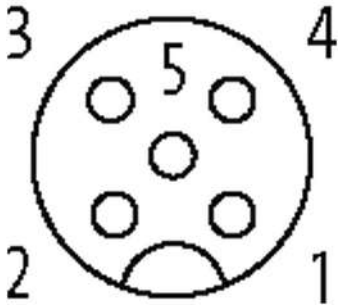

Product may differ from Image

Approvals

The information in this brochure has been compiled with the utmost care.
Liability for the correctness completeness and topicality of the information is restricted to gross negligence. Version: 01/20

* only for products with UL/CSA approved cable

Form	
Form	12361
Cables	
Cable number	339
No./diameter of wires	5× 0.34 mm²
Wire isolation	PP (br, wh, bl, bk, gnye)
C-track properties	4 Mio.
Jacket Color	pastel blue
Material (jacket)	TPE (UL)
Outer Ø	5.0 mm ±5%
Bend radius (moving)	10× outer Ø
Temperature range (fixed)	-40...+105 °C
Temperature range (mobile)	-25...+105 °C
Cable identification	339
Approval (cable)	UL (AWM-Style 22126/11558), CE conform
Cable weight [g/m]	35,20
Material (wire)	Cu wire, bare
Resistor (core)	max. 58 Ω/km (20 °C)
Single wire Ø (core)	0.1 mm
Construction (core)	42× 0.1 mm (multi-strand wire class 6)
Diameter (core)	5× 0.34 mm²
AWG	similar to AWG 22
Material (wire isolation)	PP
Material property (wire isolation)	CFC-, halogen-, cadmium-, silicone- and lead-free
Shore hardness (wire isolation)	64 ±3 D
Wire-Ø incl. isolation	1.27m ±5%
Color/numbering of wires	br, bk, bl, wh, gnye longitudinally striped
Stranding combination	5 wires twisted around central filler
Shield	no
Material (jacket)	TPE-S (laser-markable)
Material property (jacket)	CFC-, halogen-, cadmium-, silicone- and lead-free, matt, low-adhesion, machine easy to process, abrasion-resistant, hydrolysis and microbial resistant
Shore hardness (jacket)	47 ±5 D
Outer-Ø (jacket)	5.0 mm ±5%
Color (jacket)	pastel blue
Nominal voltage	300 V AC
Test voltage	3000 V AC
Current load capacity	to DIN VDE 0298-4
Temperature range (fixed)	-40...+105 °C
Temperature range (mobile)	-25...+105 °C
Bend radius (fixed)	5× outer Ø
Bend radius (moving)	10× outer Ø
No. of bending cycles (C-track)	max. 4 Mio. (25 °C)
Traversing distance (C-track)	max. 10 m
Travel speed (C-track)	max. 3 m/s
Acceleration (C-track)	max. 10 m/s²

The information in this brochure has been compiled with the utmost care.
Liability for the correctness completeness and topicality of the information is restricted to gross negligence. Version: 01/20

Torsion stress	±180°/m
No. of torsion cycles	max. 2 Mio. (25 °C)
Torsion speed	35 cycles/min
Technical Data	
Operating voltage	max. 125 V AC/DC
Operating voltage (only UL listed)	max. 30 V AC/DC
Rated surge voltage	1.5 kV
Operating current per contact	max. 4 A
No. of poles	5-pole
Material group	IEC 60664-1, category I
Coding	A-coded
LED display	no
Locking of ports	Screw thread (M12×1 mm) recommended torque 0.6 Nm, self-securing
Compression gland	M12 (SW14)
Protection	IP65, IP68, IP69K inserted and tightened (EN 60529)
Material	PP
Locking material	Stainless steel 1.4404 (V4A)
suitable for corrugated tube (internal Ø)	without
General data	
Standards	DIN EN 61076-2-101 (M12), FDA conform
Mounting method	inserted, tightened
Material (contact)	Copper alloy
Material (contact surface)	Au
Material (contact carrier)	PP, ice blue
Material (gasket)	EPDM
Pollution Degree	3
Stripping length (jacket)	20 mm
Temperature range	-40...+105 °C, depending on cable quality
Commercial data	
country of origin	DE
customs tariff number	85444290
EAN	4048879695459
eClass	27279218
Packaging unit	1

The information in this brochure has been compiled with the utmost care.
Liability for the correctness completeness and topicality of the information is restricted to gross negligence. Version: 01/20