52104490	DATA SHEET	LAPP
Valid from: 21.10.2022	SKINDICHT® MA-PG/M	

The SKINDICHT® MA-PG/M is a reducer from an outer PG-thread to an inner metric thread.



Components

	Brass	brass lead-free
Material	brass, nickel-plated	brass lead-free, nickel-plated

Technical features:

External thread	PG7 up to PG36 acc. to DIN 40430
Internal thread	M12x1.5 up to M40x1.5 acc. to EN 60423
Design	Form A Knurl
	Form B Smooth
Temperature range	-60°C up to +200°C

Norm references:

CE

We reserve all rights according to DIN ISO 16016.

SKINDICHT® MA-PG/M Form A

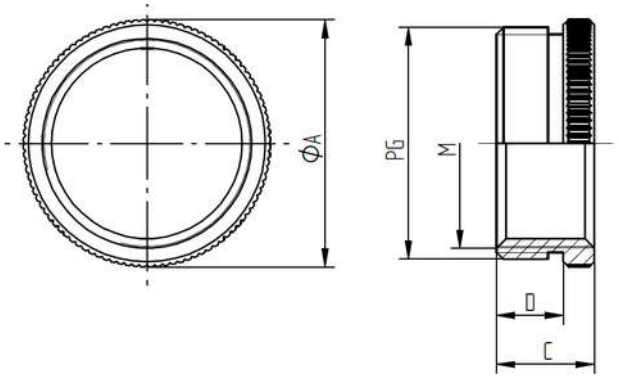

External thread PG	Internal thread M	Diameter Ø A mm	Length C mm	Thread length D mm	Part No. brass	Part No. brass lead-free
PG 11	M16x1.5	20	8,5	6	52104492	52104492LF
PG 16	M20x1.5	24	9,5	6,5	52104495	52104495LF
PG 21	M20x1.5	30	10	7	52104497	-
PG 21	M25x1.5	30	10	7	52104498	-
PG 29	M25x1.5	39	11,5	8	52104500	-
PG 29	M32x1.5	39	11,5	8	52104501	-
PG 36	M40x1.5	50	12,5	9	52104503	-

SKINDICHT® MA-PG/M Form B

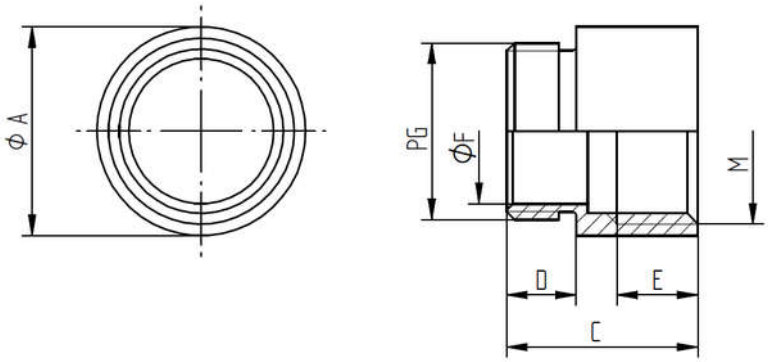

External thread PG	Internal thread M	Diameter Ø A mm	Length C mm	Thread length D mm	Thread length E mm	Diameter Ø F mm	Part No. brass	Part No. brass lead-free
PG 7	M12x1,5	14	15	5	6	10	52104490	52104490LF
PG 9	M16x1,5	18	16,5	6	7	12,5	52104491	52104491LF
PG 11	M20x1,5	22	18,5	6	8,5	15	52104493	52104493LF
PG 13,5	M20x1,5	22	19	6,5	8,5	17	52104494	52104494LF
PG 16	M25x1,5	27	21	6,5	8,5	18,5	52104496	52104496LF
PG 21	M32x1,5	34	23	7	10	24	52104499	-
PG 29	M40x1,5	42	25,5	8	11	32	52104502	-

For more information please see our current catalogue. Please do not hesitate to contact our laboratory if there are any questions regarding resistance against aggressive agents and special oil.

We reserve all rights according to DIN ISO 16016.