

PNOZ m EF 4AI

PILZ
THE SPIRIT OF SAFETY

- Configurable, safe small controllers PNOZmulti 2

Operating Manual-1004650-EN-02

This document is the original document.

All rights to this documentation are reserved by Pilz GmbH & Co. KG. Copies may be made for the user's internal purposes. Suggestions and comments for improving this documentation will be gratefully received.

Source code from third-party manufacturers or open source software has been used for some components. The relevant licence information is available on the Internet on the Pilz homepage.

Pilz®, PIT®, PMI®, PNOZ®, Primo®, PSEN®, PSS®, PVIS®, SafetyBUS p®, SafetyEYE®, SafetyNET p®, the spirit of safety® are registered and protected trademarks of Pilz GmbH & Co. KG in some countries.


SD means Secure Digital

1	**Introduction**	**5**
1.1	Validity of documentation	5
1.2	Using the documentation	5
1.3	Definition of symbols	5
2	**Overview**	**7**
2.1	Scope of supply	7
2.2	Unit features	7
2.3	Front view	8
3	**Safety**	**9**
3.1	Intended use	9
3.2	System requirements	10
3.3	Safety regulations	10
3.3.1	Safety assessment	10
3.3.2	Use of qualified personnel	10
3.3.3	Warranty and liability	11
3.3.4	Disposal	11
3.3.5	For your safety	11
4	**Function Description**	**12**
4.1	Integrated protection mechanisms	12
4.1.1	Measures for achieving process safety	13
4.2	Analogue inputs	15
4.3	Monitoring functions	15
4.3.1	Working range monitoring	15
4.3.2	Plausibility check	17
4.3.3	Scaling	20
4.3.4	Mathematical operations	20
4.3.5	Constant	20
4.3.6	Threshold value monitoring	20
4.3.7	Range monitoring	21
4.3.8	Diagnostics	22
4.4	Block diagram	23
5	**Installation**	**24**
5.1	General installation guidelines	24
5.2	Dimensions in mm	24
5.3	Connecting the base unit and expansion modules	24
6	**Commissioning**	**26**
6.1	Wiring	26
6.2	Connection	26
6.3	Download modified project to the PNOZmulti system	31
7	**Operation**	**32**
7.1	LED indicators	32

8 Technical details 34
8.1 Safety characteristic data 37

9 Order reference 38
9.1 Product 38
9.2 Accessories 38

1 Introduction

1.1 Validity of documentation

This documentation is valid for the product PNOZ m EF 4AI from Version HW:01, FW:01.00.

This operating manual explains the function and operation, describes the installation and provides guidelines on how to connect the product.

1.2 Using the documentation

This document is intended for instruction. Only install and commission the product if you have read and understood this document. The document should be retained for future reference.

1.3 Definition of symbols

Information that is particularly important is identified as follows:



DANGER!

This warning must be heeded! It warns of a hazardous situation that poses an immediate threat of serious injury and death and indicates preventive measures that can be taken.



WARNING!

This warning must be heeded! It warns of a hazardous situation that could lead to serious injury and death and indicates preventive measures that can be taken.



CAUTION!

This refers to a hazard that can lead to a less serious or minor injury plus material damage, and also provides information on preventive measures that can be taken.



NOTICE

This describes a situation in which the product or devices could be damaged and also provides information on preventive measures that can be taken. It also highlights areas within the text that are of particular importance.



INFORMATION

This gives advice on applications and provides information on special features.

2 Overview

2.1 Scope of supply

- Expansion module PNOZ m EF 4AI
- Jumper

2.2 Unit features

Application of the product PNOZ m EF 4AI:

Analogue input module for connection to a base unit from the PNOZmulti 2 system

The product has the following features:

- 4 analogue inputs for current measurement
- Each input can be configured separately
- Current range: 0 ... 25 mA
- Resolution current measurement: 15 Bit + sign Bit
- Working range monitoring [15] in accordance with NAMUR NE43 recommendation
- Scaling function [20]
- Plausibility check [17]
- Mathematical operations [20]
- Constant [20]
- Threshold value monitoring [20]
- Range monitoring [21]
- Exact analogue value can be passed to a fieldbus or OPC server for diagnostic purposes
- LEDs [32] for
  - Operating status
  - Status of the input signals
  - Error/diagnostics
- Plug-in connection terminals:
  Either spring-loaded terminal or screw terminal available as an accessory (see Order references for accessories [38]).
- Please refer to the document "PNOZmulti System Expansion" for details of the base units PNOZmulti 2 that can be connected.

2.3 Front view

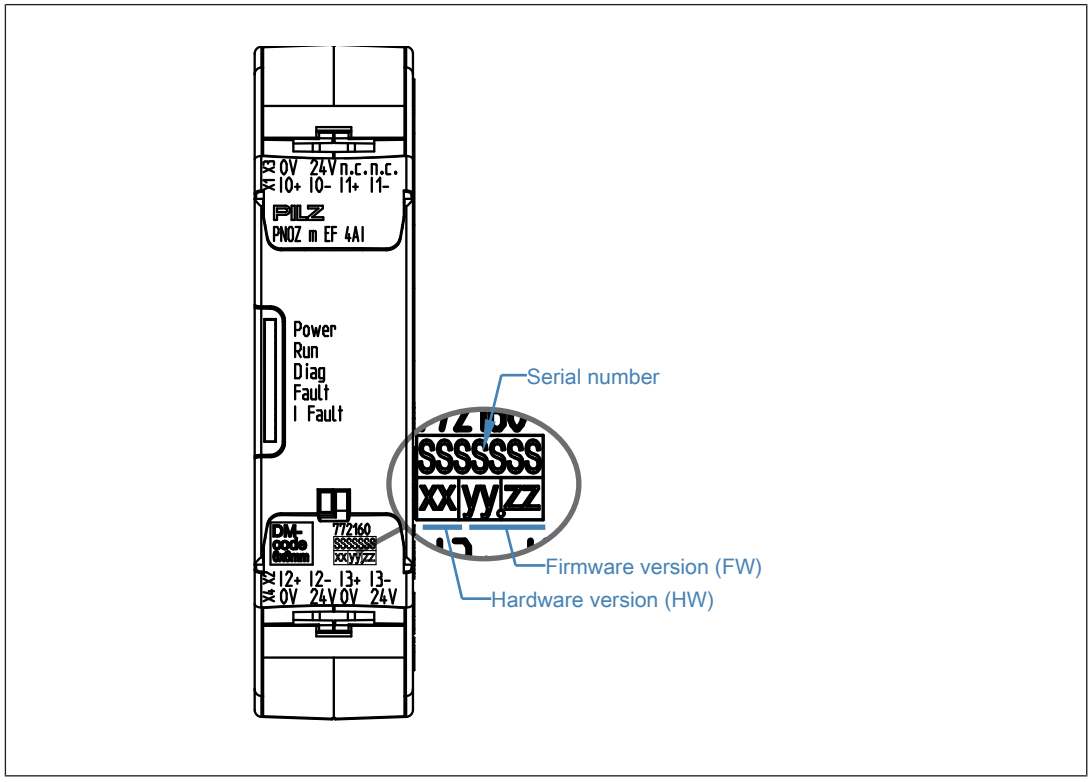

Legend

X1:	Analogue inputs I0+, I0-, I1+, I1 -
X2:	Analogue inputs I2+, I2-, I3+, I3-
X3:	Supply connections 0 V, 24 V to supply the sensors
X4	Supply connections 0 V, 24 V, 0 V, 24 V to supply the analogue input module and to supply the sensors
LEDs	Power, Run, Diag, Fault, I Fault,

3 Safety

3.1 Intended use

The expansion module PNOZ m EF 4AI is an analogue input module. It provides 4 safe analogue inputs for current measurement. The analogue inputs are designed as differential inputs. Each analogue input has a measuring range from 0 mA to 25 mA.

The expansion module may only be connected to a base unit from the configurable system PNOZmulti 2 (please refer to the document "PNOZmulti System Expansion" for details of the base units that can be connected).

The configurable small control systems PNOZmulti are used for the safety-related interruption of safety circuits and are designed for use in:

- E-STOP equipment
- Safety circuits in accordance with VDE 0113 Part 1 and EN 60204-1
- The product PNOZ m EF 4AI meets the requirements of the standards EN 81-20, EN 81-22 and EN 81-50, harmonised under the Lifts Directive 2014/33/EU, and the requirements of the standard EN 115-1, harmonised under the Machinery Directive 2006/42/EC.
- The programmable safety system should be installed in a protected environment that meets at least the requirements of pollution degree 2.
  Example: Protected inside space or control cabinet with protection type IP54 and corresponding air conditioning.

The product PNOZ m EF 4AI can be used in furnaces in accordance with EN 298. You must make sure that there is sufficient overvoltage protection.

- You must use only symmetrically operated cables that are protected with an appropriate filter (z. B. Dehn overvoltage filter Type DCO SD2 E12, order number 917 987 or Type DCO SD2 ME12, order number 917 920).
- Ensure that the folder has the required SIL classification in accordance with your application.
- Use the external protection elements in accordance with the manufacturer and installation manual for limiting overvoltages.

Please note the following when configuring the analogue input module PNOZ m EF 4AI:

- With 1-channel operation, check the measured value with an anticipated measured value to detect measurement errors and offset errors on the sensor, or to detect open circuit and short circuit between sensor and module.
- With 2-channel operation, perform a plausibility check of two inputs and two sensors (see chapter Plausibility check [📖 17]). Take appropriate measures to avoid common cause errors in the sensor technology, by using diverse sensors or a separate supply voltage for the sensors, for example.
- Monitor a defined working range to detect open circuit or short circuit; we recommend 3.8 … 20.5 mA in accordance with NE 43.
- The measured value is attenuated through the input filter. At the cutoff frequency, the amplitude of the measured value is 70 % of the amplitude of the input signal.



CAUTION!

Hazard due to the destruction of the device

Measured values may not leave the positive current range. This could destroy the device.

The following is deemed improper use in particular

- Any component, technical or electrical modification to the product,
- Use of the product outside the areas described in this manual,
- Use of the product outside the technical details (see Technical details [📖 34]).



NOTICE

EMC-compliant electrical installation

The product is designed for use in an industrial environment. The product may cause interference if installed in other environments. If installed in other environments, measures should be taken to comply with the applicable standards and directives for the respective installation site with regard to interference.

3.2 System requirements

Please refer to the "Product Modifications PNOZmulti" document in the "Version overview" section for details of which versions of the base unit and PNOZmulti Configurator can be used for this product.

3.3 Safety regulations

3.3.1 Safety assessment

Before using a device it is necessary to perform a safety assessment in accordance with the Machinery Directive.

Functional safety is guaranteed for the product as a single component. However, this does not guarantee the functional safety of the overall plant/machine. In order to achieve the required safety level for the overall plant/machine, define the safety requirements for the plant/machine and then define how these must be implemented from a technical and organisational standpoint.

3.3.2 Use of qualified personnel

The products may only be assembled, installed, programmed, commissioned, operated, maintained and decommissioned by competent persons.

A competent person is someone who, because of their training, experience and current professional activity, has the specialist knowledge required to test, assess and operate the work equipment, devices, systems, plant and machinery in accordance with the general standards and guidelines for safety technology.

It is the company’s responsibility only to employ personnel who

- Are familiar with the basic regulations concerning health and safety / accident prevention,
- Have read and understood the information provided in this description under "Safety",
- And have a good knowledge of the generic and specialist standards applicable to the specific application.

3.3.3 Warranty and liability

All claims to warranty and liability will be rendered invalid if

- The product was used contrary to the purpose for which it is intended,
- Damage can be attributed to not having followed the guidelines in the manual,
- Operating personnel are not suitably qualified,
- Any type of modification has been made (e.g. exchanging components on the PCB boards, soldering work etc.).

3.3.4 Disposal

- In safety-related applications, please comply with the mission time T_M in the safety-related characteristic data.
- When decommissioning, please comply with local regulations regarding the disposal of electronic devices (e.g. Electrical and Electronic Equipment Act).

3.3.5 For your safety

The unit meets all the necessary conditions for safe operation. However, you should always ensure that the following safety requirements are met:

- This operating manual only describes the basic functions of the unit. The expanded functions are described in the PNOZmulti Configurator's online help. Only use these functions once you have read and understood the documentations.
- Do not open the housing or make any unauthorised modifications.
- Please make sure you shut down the supply voltage when performing maintenance work (e.g. exchanging contactors).

4 Function Description

4.1 Integrated protection mechanisms

The relay meets the following safety requirements:

- The circuit is redundant with built-in self-monitoring.
- The safety device remains effective in the case of a component failure.

The analogue input module can be used for applications up to SIL 3.

Applications in accordance with SIL 2:
When the analogue input module for applications in accordance with SIL 2 is to be used, sensors must be connected that comply with EN IEC 62061: SIL 2.

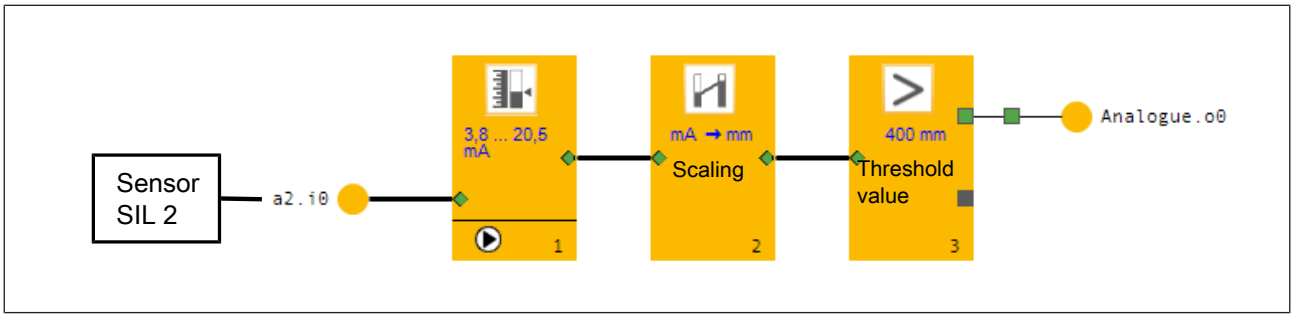

Applications in accordance with SIL 3:
When the analogue input module for applications in accordance with SIL 3 is to be used, two sensors must be connected that comply with EN IEC 62061: SIL CL 2.

Two inputs have to be configured and checked for plausibility (see Plausibility check [📖 17]).

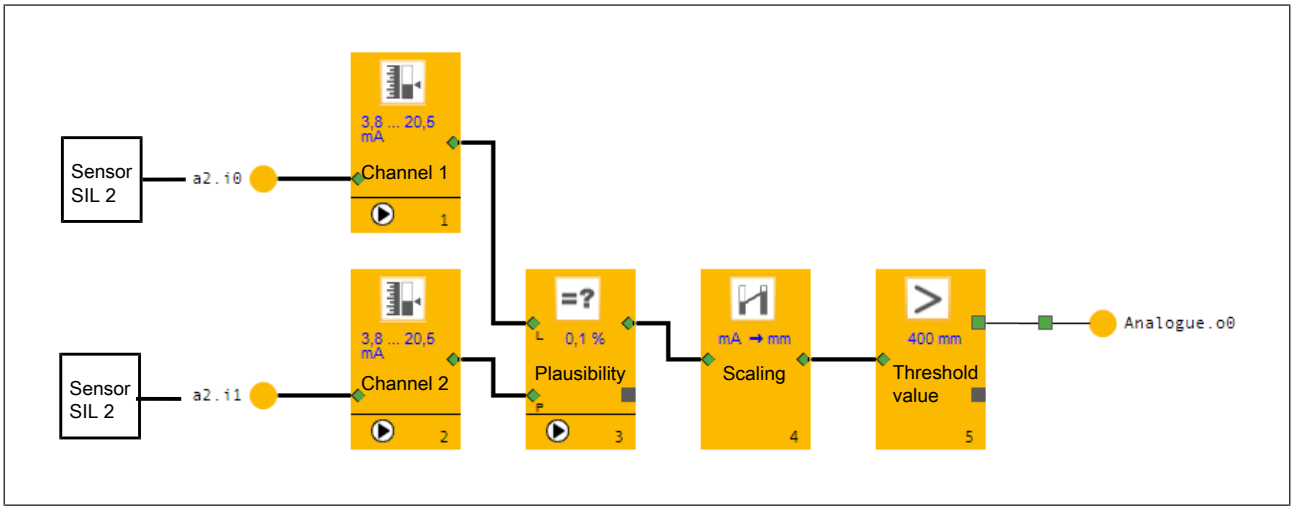

NOTICE

For SIL 3 applications, set a maximum permitted deviation between the measured values of both input signals (tolerance) in the PNOZmulti Configurator. A tolerance is only entered to balance out the imprecision of the signal recording, the encoder and the analogue input module. To maintain safety, the tolerance should be set as low as possible. Please note that the **maximum safety-related measurement error for the overall system** is composed of the following measurement errors:

Error during signal recording

+ Sensor measurement error

+ Max. measurement error in the event of an error at the module Measures for achieving process safety [13]
To ensure that your application switches off safely in the event of a critical process variable, the configuration of the range limits/threshold values must be increased/decreased.

4.1.1 Measures for achieving process safety

The module will detect internal module errors. Sensor errors and wiring errors can be detected using the function ***Working range monitoring***.

Please note that the overall accuracy must be considered when defining monitored limit values in the user program. The calculation of the overall accuracy is described in the following examples

Example for calculating the overall measuring accuracy with 1-channel operation

The overall accuracy in % is calculated by adding the following values:

- Module's safety-related accuracy of **1 %** (see Technical details [34]).
- Module's measuring accuracy

  This value is calculated by adding all deviations from the measuring range limit value (see Technical details [34]).
  The value ***Greatest transient deviation during el. interference test*** need only be considered in environments with strong EMC interference.
  A measuring accuracy of **0.5 %** is assumed for this example.
- Sensor's measuring accuracy

  This value is taken from the sensor's technical details.
  A measurement accuracy of **0.5 %** is assumed for this example (in relation to the overall measuring range of 0 … 25 mA).

Calculation of the monitored limit values, taking into account the overall accuracy:

- Overall accuracy in **%**:
  1 % + 0.5 % + 0.5 % **= 2 %**.
  The overall accuracy refers to the overall measuring range of 0 ... 25 mA
- Overall accuracy in **mA** in relation to the overall measuring range:
  25 mA * 2 % = **0.5 mA**

- Sensor's measuring range: 0 ... 100 °C at 4 ... 20 mA.
  Resolution of the sensor: 100 °C / (20 – 4 mA) = **6.25 °C per mA**.

The overall accuracy in °C is therefore: 0.5 mA * 6.25 °C per mA = **3.125 °C**.

This overall accuracy must be considered when defining monitored limit values in the user program.
For example, if a hazardous situation should arise at a temperature above 80 °C, a safe reaction must occur in the user program at a temperature above 80 °C - 3.125 °C = 76.875 °C.

Example for calculating the overall measuring accuracy with 2-channel operation

With 2-channel operation, two inputs and two sensors must be used, as well as the ***Plausibility test*** function.

The overall accuracy in % is calculated by adding the following values:

- Empirically established tolerance
  Instead of the module's safety-related accuracy, an empirically established tolerance is used with 2-channel operation.
  Enter in the PNOZmulti Configurator in the element ***Plausibility*** a percentage tolerance at which availability is still maintained.
  This tolerance value defines the maximum permitted deviation between the two analogue input signals.

  In the example, a tolerance of **2 %** has been determined.

  If as set tolerance is exceeded, the analogue value is signalised as invalid. For availability reasons we therefore recommend that you use a slightly higher value for the tolerance than the empirically established deviation.
  For the example, a tolerance of **3 %** was therefore set for the plausibility monitoring.
- Module's measuring accuracy
- This value is calculated by adding all deviations from the measuring range limit value (see Technical details [📖 34]).
  The value ***Greatest transient deviation during el. interference test*** needs only be considered in environments with strong EMC interference.
  A measuring accuracy of **0.5 %** is assumed for this example.
- Sensor's measuring accuracy

  This value is taken from the sensor's technical details. A value of **0.5 %** is assumed for this example (in relation to the overall measuring range of 0 … 20 mA).

Calculation of the monitored limit values, taking into account the overall accuracy:

- Overall accuracy in **%**:
  3 % + 0.5 % + 0.5 % **= 4 %**.
  The overall accuracy refers to the overall measuring range of 0 ... 25 mA
- Overall accuracy in **mA** in relation to the overall measuring range:
  25 mA * 4 % = **1 mA**
- Sensor's measuring range: 0 ... 500 mbar at 4 ... 20 mA.
  Resolution of the sensor: 500 mbar / (20 – 4 mA) = **31.25 mbar per mA**.

The overall accuracy in mbar is therefore: 1 mA * 31.25 mbar per mA = **31.25 mbar**.

This overall accuracy must be considered when defining monitored limit values in the user program.
For example, if a hazardous situation should arise at a pressure above 300 mbar, a safe reaction must occur in the user program at a pressure above 300 mbar – 31.25 mbar = 268.75 mbar.



WARNING!

Loss of the safety function by limit values that have been set too high or too low!

You must take into account the overall accuracy when setting the limit values in the user program.

4.2 Analogue inputs

The module has 4 analogue inputs. This is to monitor analogue input current signals.
The input signals are recorded and read in at each input through two channels and are converted into digital signals.
The measured value resolution is 15 Bit plus sign Bit.
The measuring range is 0 … 25 mA

4.3 Monitoring functions

In the PNOZmulti Configurator you can configure the following limit values and monitoring functions.

4.3.1 Working range monitoring

With the working range monitoring you define the valid working or measuring range. The working range monitoring is used to detect sensor errors or errors in the wiring.
You can define 4 limit values (R1 … R4) that define the working range and the failure information area.
If you do not configure a working range, the working range will be 0 … 25 mA.

The default settings are in accordance with NAMUR NE 43 recommendation to simplify the signal level for the failure information. We recommend compliance with NAMUR recommendation NE 43.



WARNING!

Potential loss of safety function if the working range monitoring is not used

It must be ensured that open circuits and sensor errors are detected. If you do not use working range monitoring, other suitable measures must be taken.

- **Lower failure information range (0 mA… R1)**
  Default: 0 … 3.6 mA
  (e.g. circuit interrupted)

- **Working range (R2 … R3)**
  Default: 3.8 … 20.5 mA
  (valid measuring range, upper and lower range limit)
- **Upper failure information range (R4 … 25 mA)**
  Default: 21 … 25 mA
  (e.g. short circuit or transducer error)
- **Hysteresis (R1 … R2, R3 … R4)**
  - **Upper hysteresis R3 ... R4:**
    The numerical value is invalid, when R4 is exceeded.
    The numerical value is valid again when R3 is undershot.
  - **Lower hysteresis R1 … R2:**
    The numerical value is invalid, when R1 is undershot.
    The numerical value is valid again when R2 is exceeded.

Example: Numerical value undershoots the working range

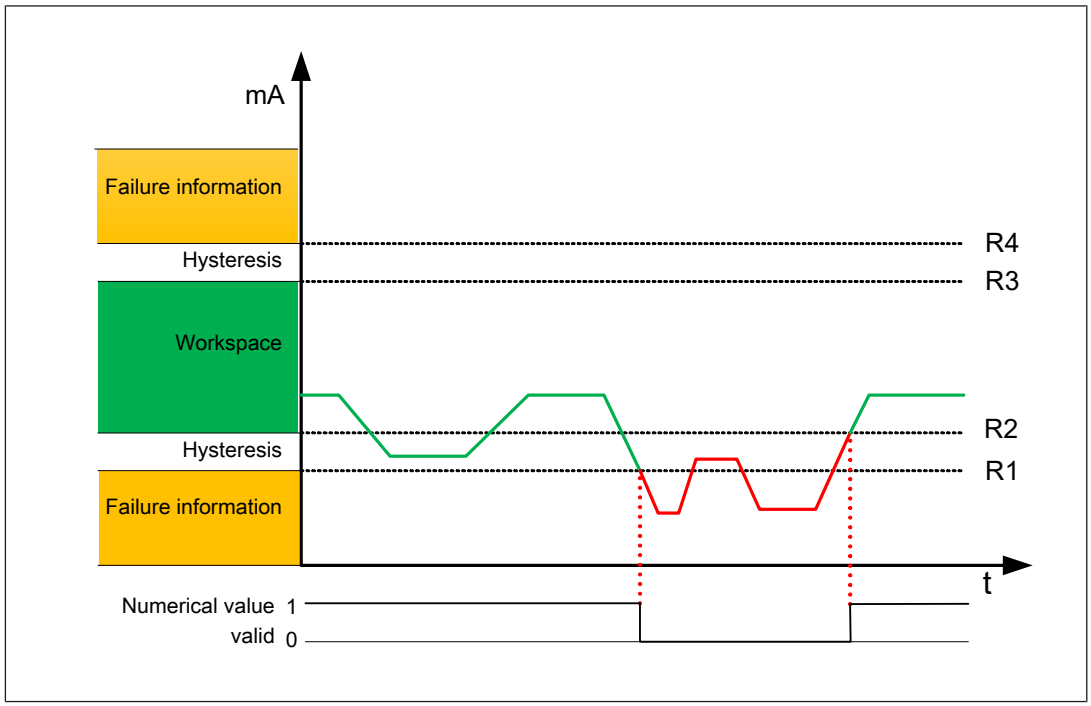

Example: Numerical value exceeds the working range

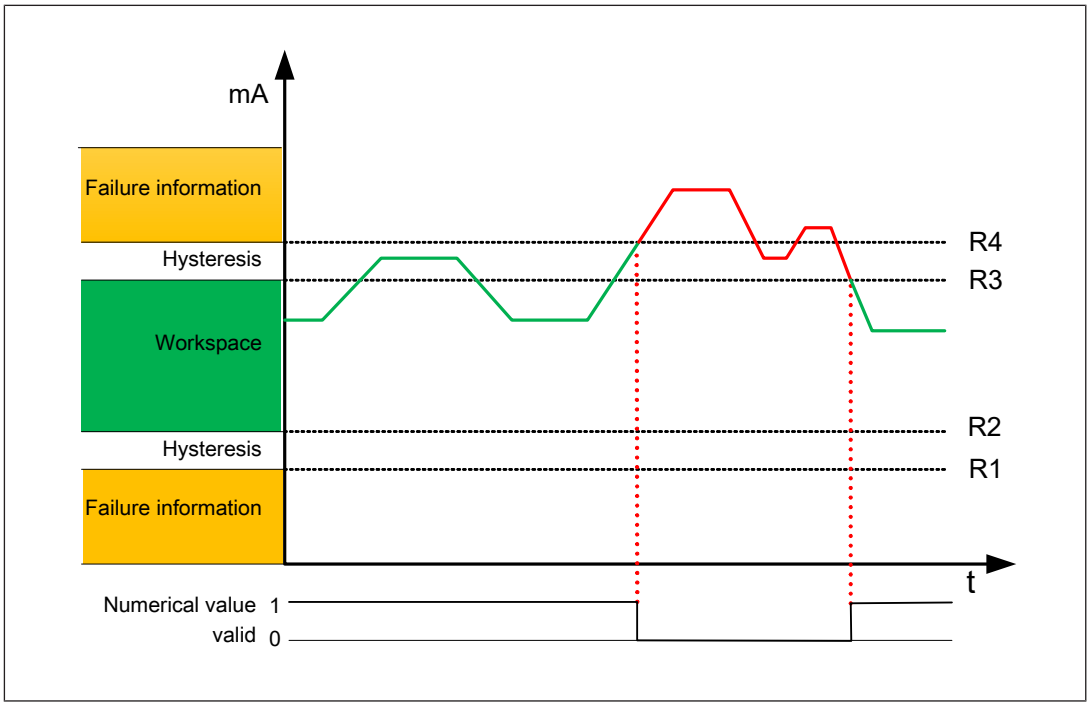

4.3.2 Plausibility check

In the plausibility check, a leading signal (L) is checked with a reference signal (P).

When the deviation of both values is greater than the configured tolerance, the numerical value will be signalised as invalid.

The reference signal is used to calculate the tolerance.

WARNING!

Loss of the safety function with large tolerances

Depending on the application, serious injury or death may result.
When configuring a high tolerance time and simultaneously a small tolerance period, the result may be a tolerance of approximately 100 %.
Select the tolerance value as small as possible.

The following tolerances can be configured:

Difference tolerance

The tolerance value defines the maximum permitted deviation between the two numerical values. There are three different types of tolerance determination:

Absolute tolerance

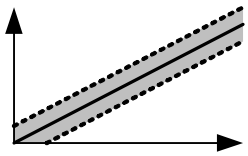

Absolute value by which the signals can deviate from each other as a maximum.

Percentage tolerance

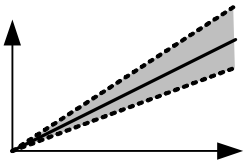

Max. percentage by which the signals may differ.

Absolute/percentage tolerance

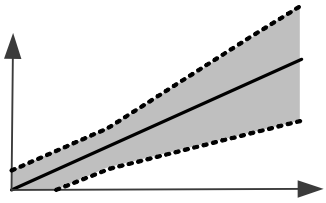

Combined tolerance. Both an absolute value and a percentage value are configured. The higher tolerance value is valid, respectively.

Peak tolerance

Peak values can be tolerated, that exceed the permitted deviation configured above for a short period.

- Tolerance time (t1)
  Maximum time for which the tolerance value may be exceeded
- Tolerance period (t2)
  Minimum time that may elapse from one limit value overshoot to the next

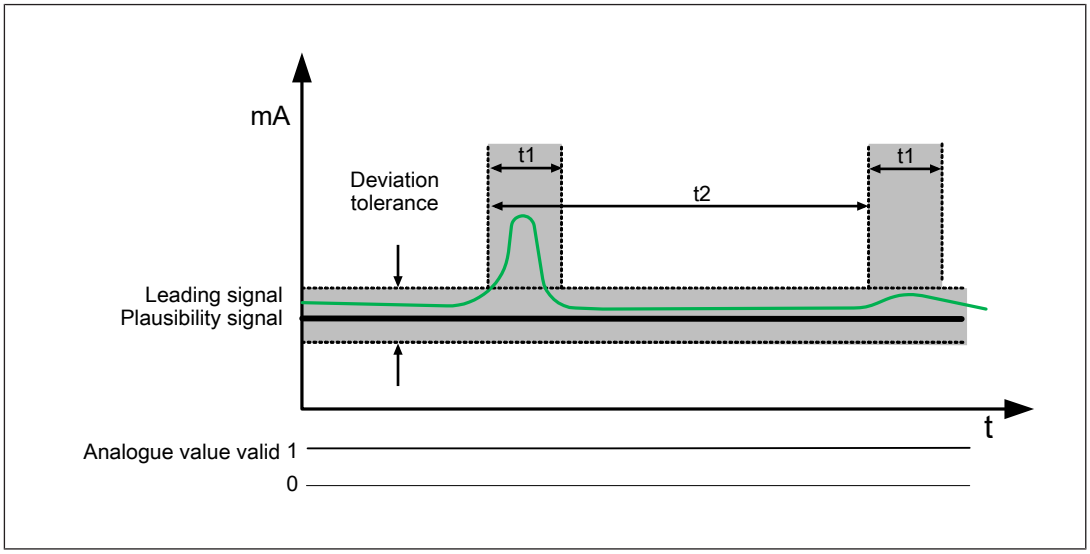

Fig.: Leading signal remains within the tolerance limits

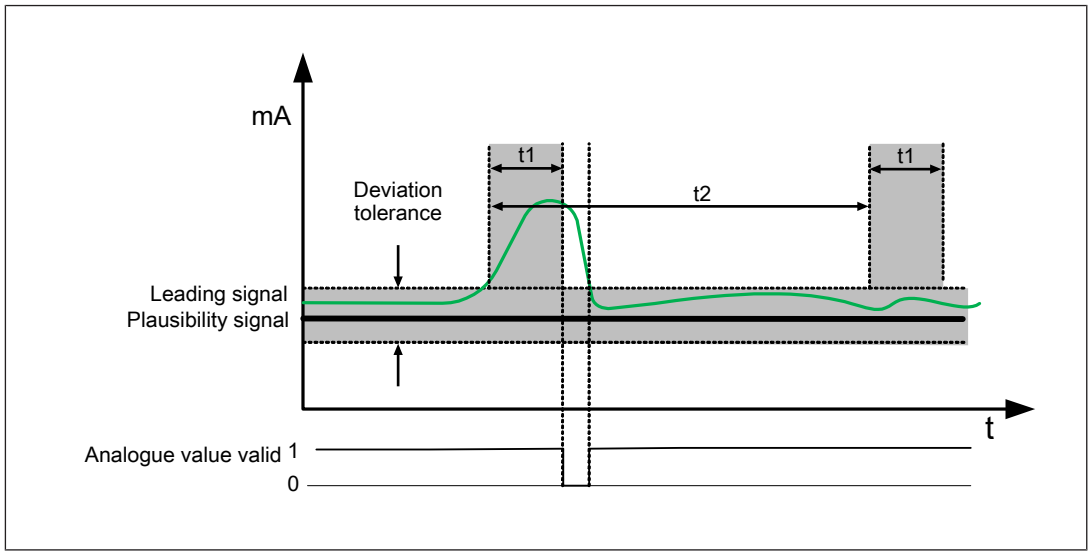

Fig.: Leading signal exceeds the tolerance time (t1)

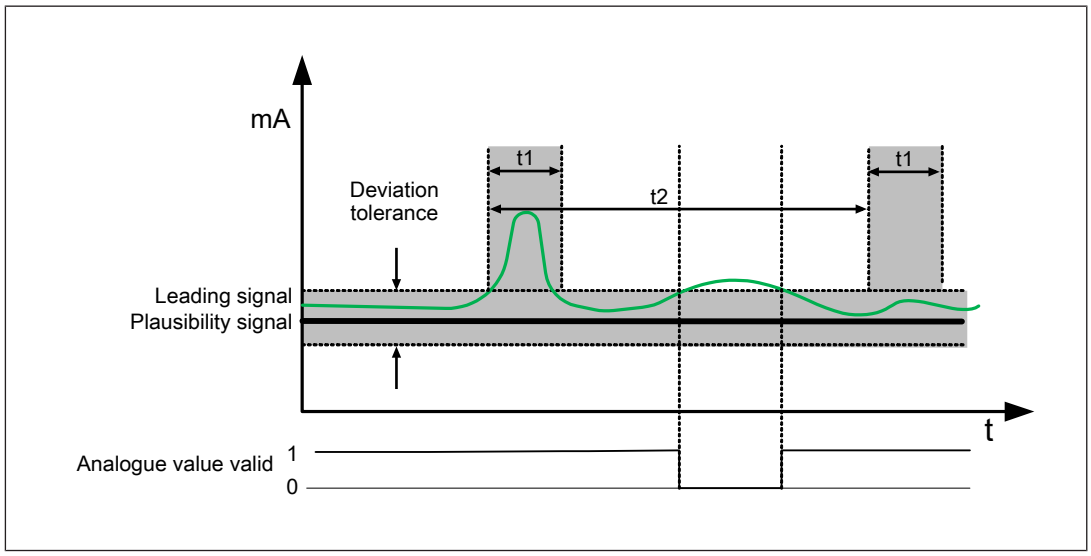

Fig.: Leading signal does not maintain the duration of the tolerance period (t2)

4.3.3 Scaling

The scaling function can be used to convert the analogue measured value (mA) to another numerical value (physical measured value of the transducer, e.g. in litres). The scaling can only be used with linear input variables

To do this, you define an upper and lower value each for the input value (current value) and for the scaled value, and you specify the unit of the scaled value.

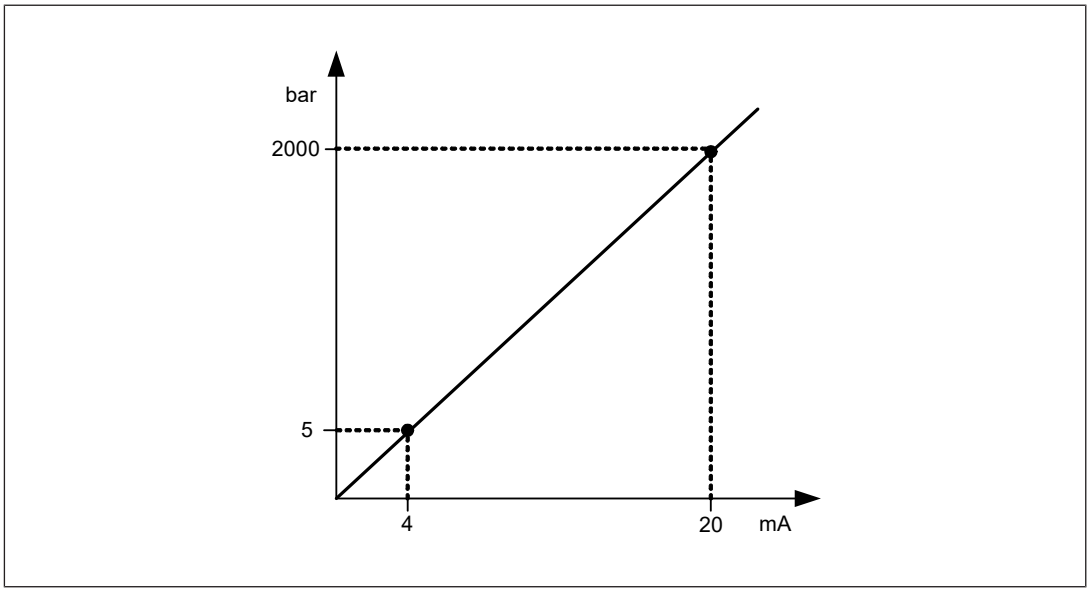

4.3.4 Mathematical operations

You can perform a mathematical operation with two numerical values:

- Addition
  The sum of two numerical values is calculated (X + Y).
- Subtraction
  The difference of two numerical values is calculated (X – Y).
- Average
  The average value of two numerical values is calculated ((X + Y) / 2).

The result of the mathematical operation can be issued as an amount (without sign).

4.3.5 Constant

A constant numerical value can be defined. The value is without dimensions and it can also be negative. It can be linked in the user program and used e.g. as an offset.

4.3.6 Threshold value monitoring

You can define switching thresholds, which can be used to monitor certain process variables (e.g. temperature values).

You can monitor whether a numerical value is greater or less than a configured switching threshold.

Hysteresis:
2 threshold values are configured per switching threshold. One threshold value (switch-on threshold) defines when the affected output is switched on. The second threshold value (switch-off threshold) defines when the output will be switched off again.

Monitoring to "greater than"

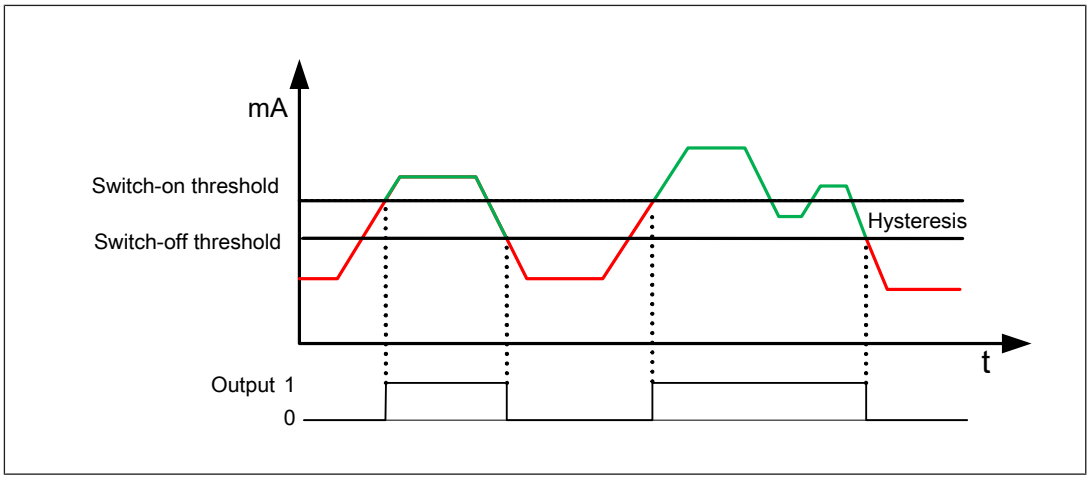

Monitoring to "less than"

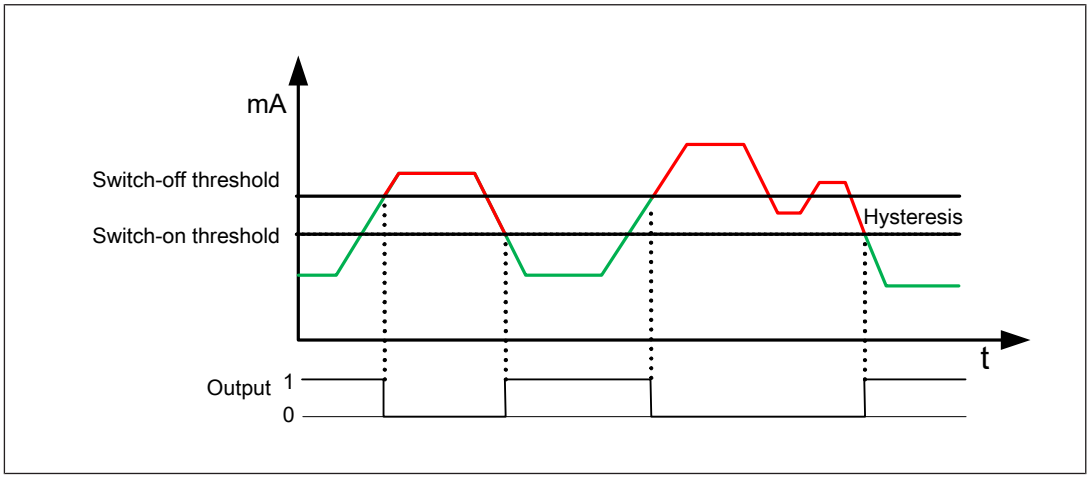

4.3.7 Range monitoring

In contrast to the threshold value monitoring, an upper and a lower switching threshold are defined in the range monitoring.

This is to monitor both exceeding or dropping below a limit value.

Hysteresis:
2 threshold values are configured per switching threshold. One threshold value (switch-on threshold) defines when the affected output is switched on. The second threshold value (switch-off threshold) defines when the output will be switched off again.

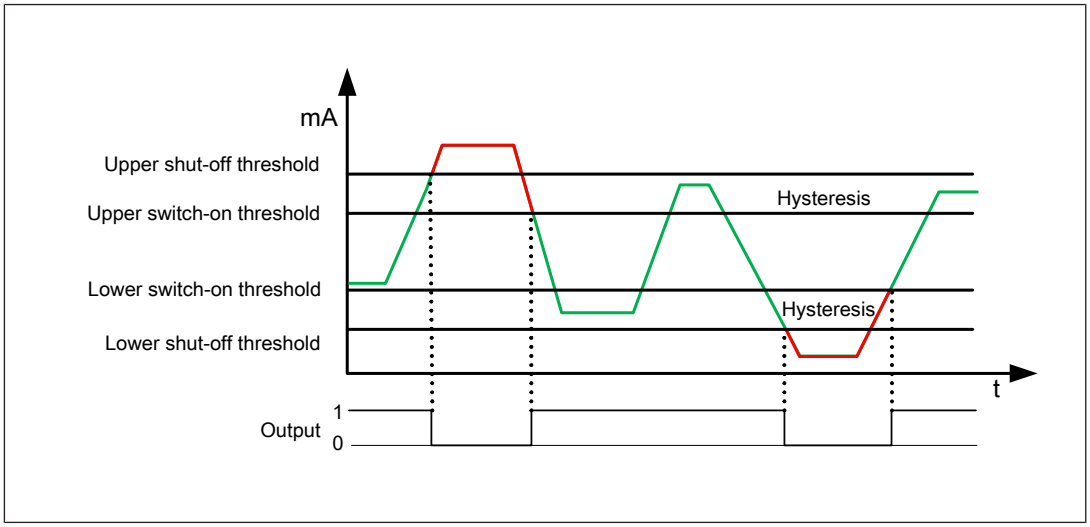

4.3.8 Diagnostics

Up to six numerical values can be passed to a fieldbus or OPC server for diagnostic purposes (see also document ***Communication Interfaces PNOZmulti 2, chapter Process data/Advanced data***).

The numerical values are also output on the base unit display.

Each value to be passed on is assigned to a fieldbus address.

When no element ***Diagnostics*** is configured, the fieldbus address is assigned automatically to the 4 analogue inputs i0 … i3:

i0 → Data ID 1

i1 → Data ID 2

i2 → Data ID 3

i3 → Data ID 4

The Diagnostics elements can be used to assign up to 6 numerical values user-defined to the fieldbus addresses (data ID 1 … 6). The automatically assigned fieldbus addresses are overwritten.
The fieldbus address is configured in the element ***Diagnostics***. Then the ***Diagnostics*** element is connected to the required numerical output of an element.

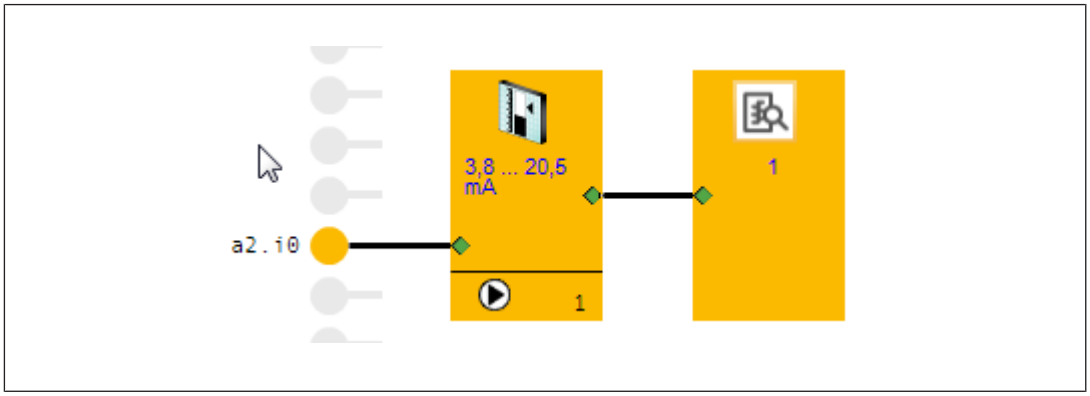

Fig.: Input i0 is assigned to the Data ID 1

4.4 Block diagram

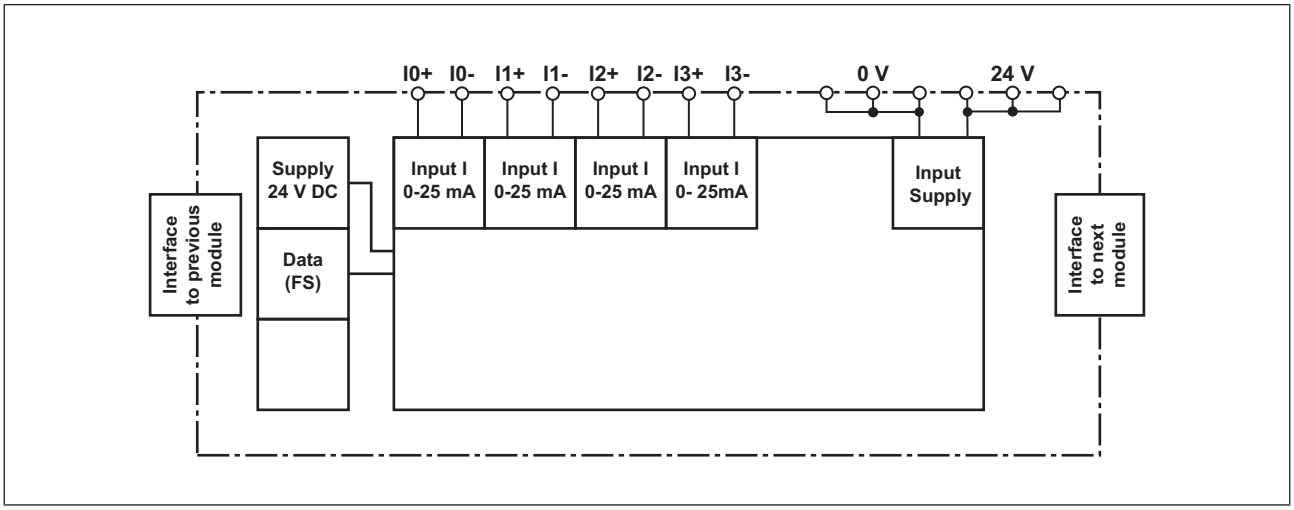

5 Installation

5.1 General installation guidelines

- The unit should be installed in a control cabinet with a protection type of at least IP54.
- Fit the safety system to a horizontal mounting rail. The venting slots must face upward and downward. Other mounting positions could damage the safety system.
- Use the locking elements on the rear of the unit to attach it to a mounting rail.
- In environments exposed to heavy vibration, the unit should be secured using a fixing element (e.g. retaining bracket or end angle).
- Open the locking slide before lifting the unit from the mounting rail.
- To comply with EMC requirements, the mounting rail must have a low impedance connection to the control cabinet housing.
- The ambient temperature of the PNOZmulti units in the control cabinet must not exceed the figure stated in the technical details. Air conditioning may otherwise be required.

NOTICE

Damage due to electrostatic discharge!

Electrostatic discharge can damage components. Ensure against discharge before touching the product, e.g. by touching an earthed, conductive surface or by wearing an earthed armband.

5.2 Dimensions in mm

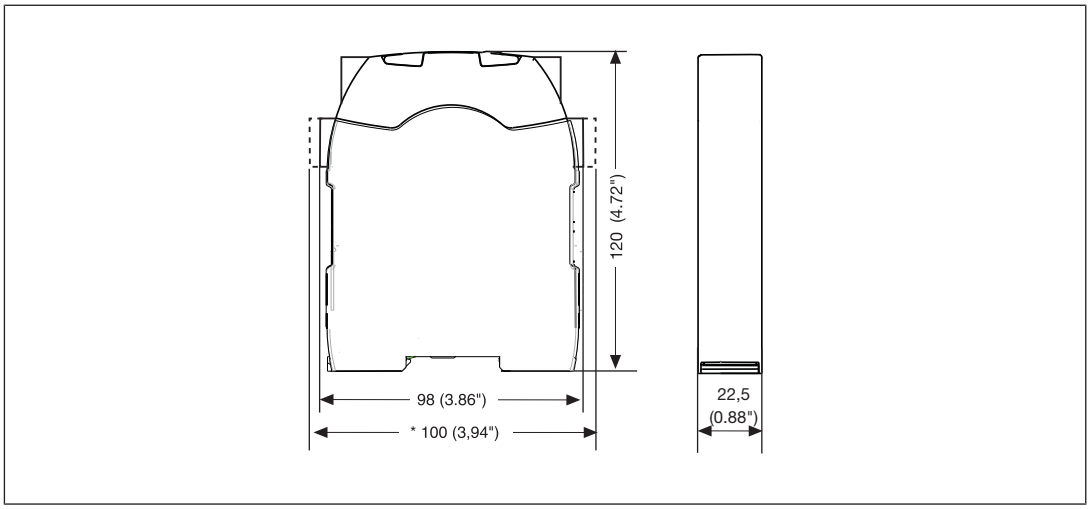

5.3 Connecting the base unit and expansion modules

Connect the base unit and the expansion modules as described in the operating manuals for the base modules.

- The terminator must be fitted to the last expansion module
- Install the expansion module in the position configured in the PNOZmulti Configurator.

The position of the expansion modules is defined in the PNOZmulti Configurator. The expansion modules are connected to the left or right of the base unit, depending on the type.

Please refer to the document "PNOZmulti System Expansion" for details of the number of modules that can be connected to the base unit and the module types.

6 Commissioning

6.1 Wiring

The wiring is defined in the circuit diagram of the PNOZmulti Configurator.

Please note:

- Information given in the Technical details [34] must be followed.
- The position of the expansion module is specified in the Hardware configuration of the PNOZmulti Configurator.
- Use copper wiring with a temperature stability of 75 °C.
- The power supply that feeds the expansion module and the sensors must meet the regulations for extra low voltages with protective electrical separation (SELV, PELV).
- Supply connections
  The 6 supply connections 24 V and 0 V to the terminal blocks X3 and X4 are interconnected internally.
  - The supply of the analogue input module PNOZ m EF 4AI has to be made via the supply connections 24 V and 0 V at the terminal block X4.
  - The other supply connections can be used for the supply of the sensors.
- Protect the supply voltage as follows:
  - Circuit breaker, characteristic C – 2 … 6 A

    or
  - Blow-out fuse, slow, 2 … 6 A
- Use shielded, twisted pair cable for the connections on the input current circuits.
- Separate the supply voltage cable from the analogue input current lines.
- **For transducers located outside the control cabinet:** Where the cable enters the control cabinet, the cable shield **must** be connected to the earth potential over a wide surface area and with low impedance (connect in star).

6.2 Connection

Supply voltage

Supply voltage	DC
	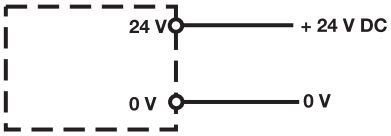

2-wire connection, supply voltage of sensors via analogue input module

- Supply connections 24 V and 0 V are used to supply the analogue input module and to supply the sensors.
- The terminals I0- … I3- and 0 V must be bridged.

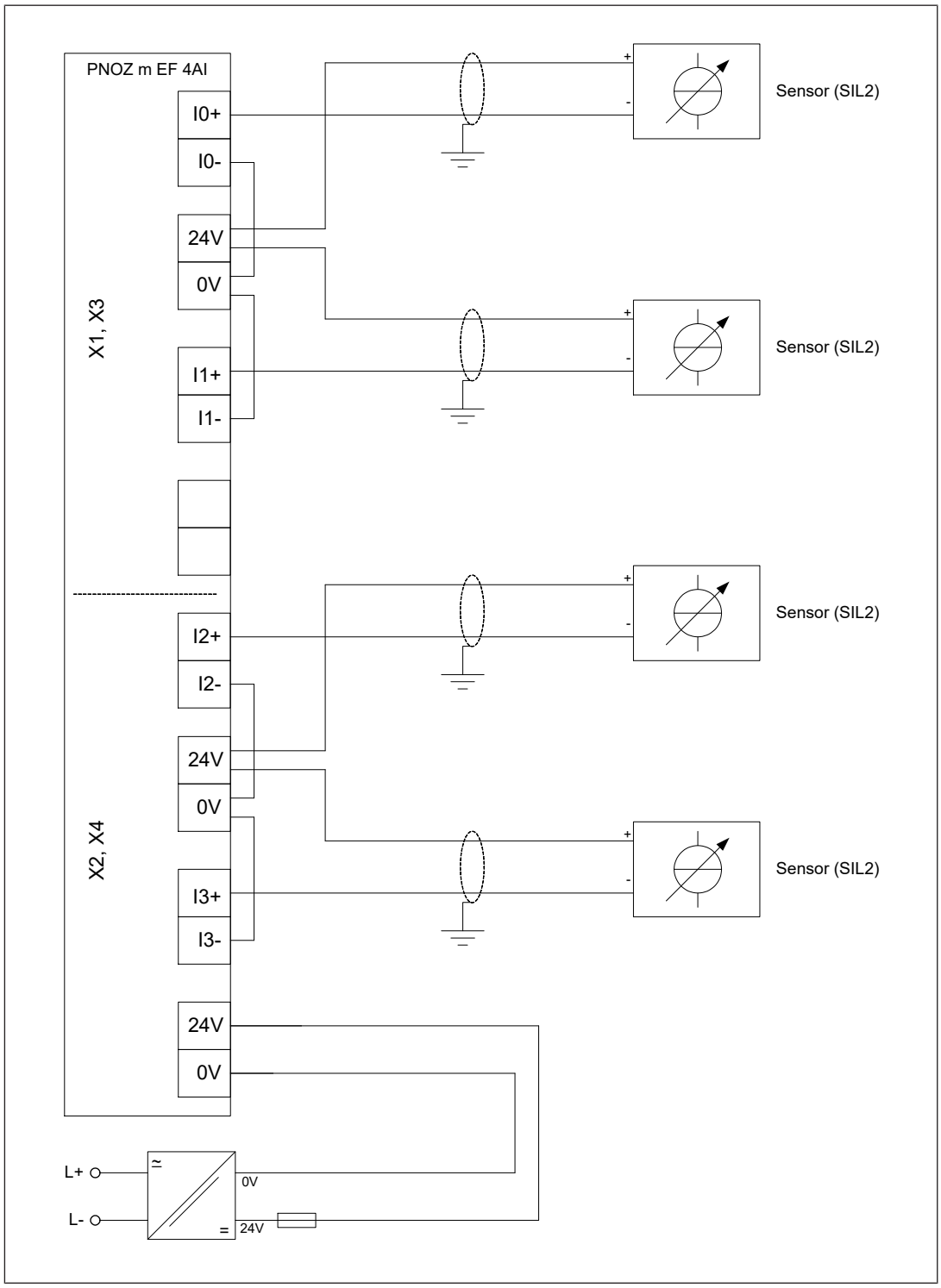

2-wire connection, supply voltage of sensors externally

- The supply connections 24 V and 0 V are used only to supply the analogue input module.
- The terminals I0- … I3- and 0 V must be bridged.
- The 0 V connections of the external power supplies have to be interconnected.

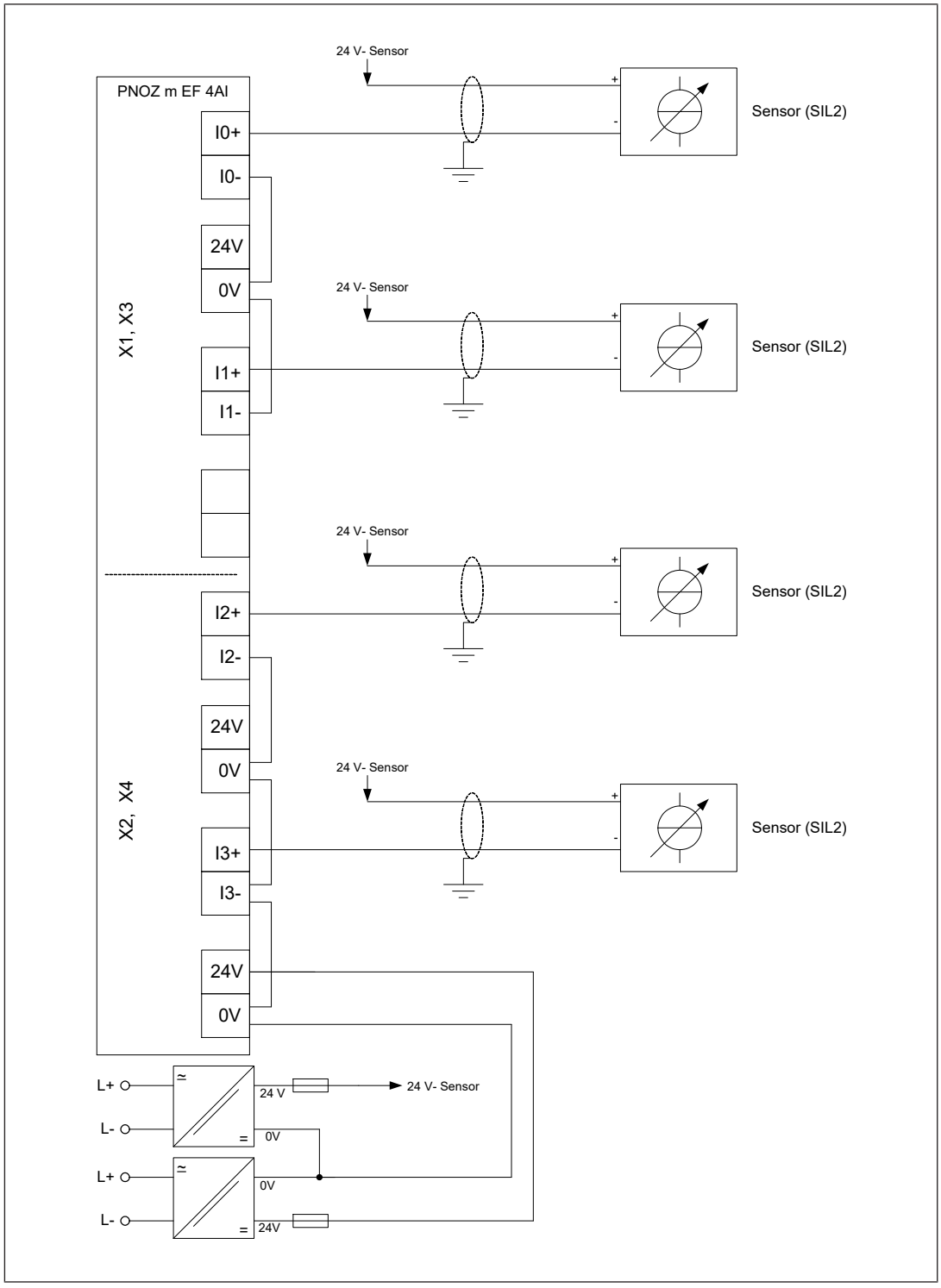

4-wire connection, supply voltage of sensors via analogue input module

- Supply connections 24 V and 0 V are used to supply the analogue input module and to supply the sensors.

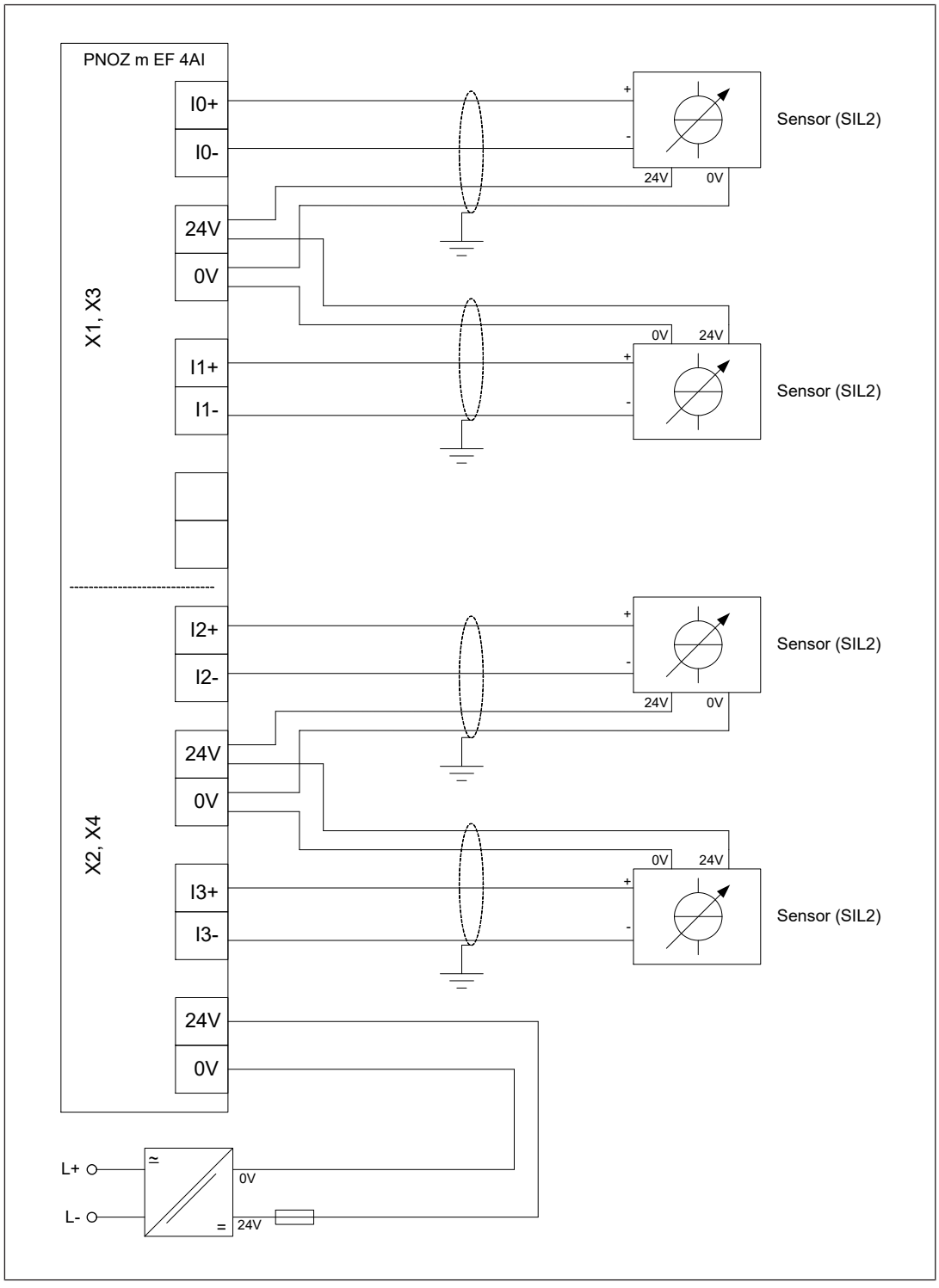
PNOZ m EF 4AI
I0+
I0-
24V
0V
X1, X3
I1+
I1-
I2+
I2-
24V
0V
X2, X4
I3+
I3-
24V
0V
+
-
24V
0V
Sensor (SIL2)
Sensor (SIL2)
Sensor (SIL2)
L+
L-
≃
=
0V
24V

4-wire connection, supply voltage of sensors externally

- The supply connections 24 V and 0 V are used only to supply the analogue input module.
- The 0 V- connections of the external power supplies can be interconnected.

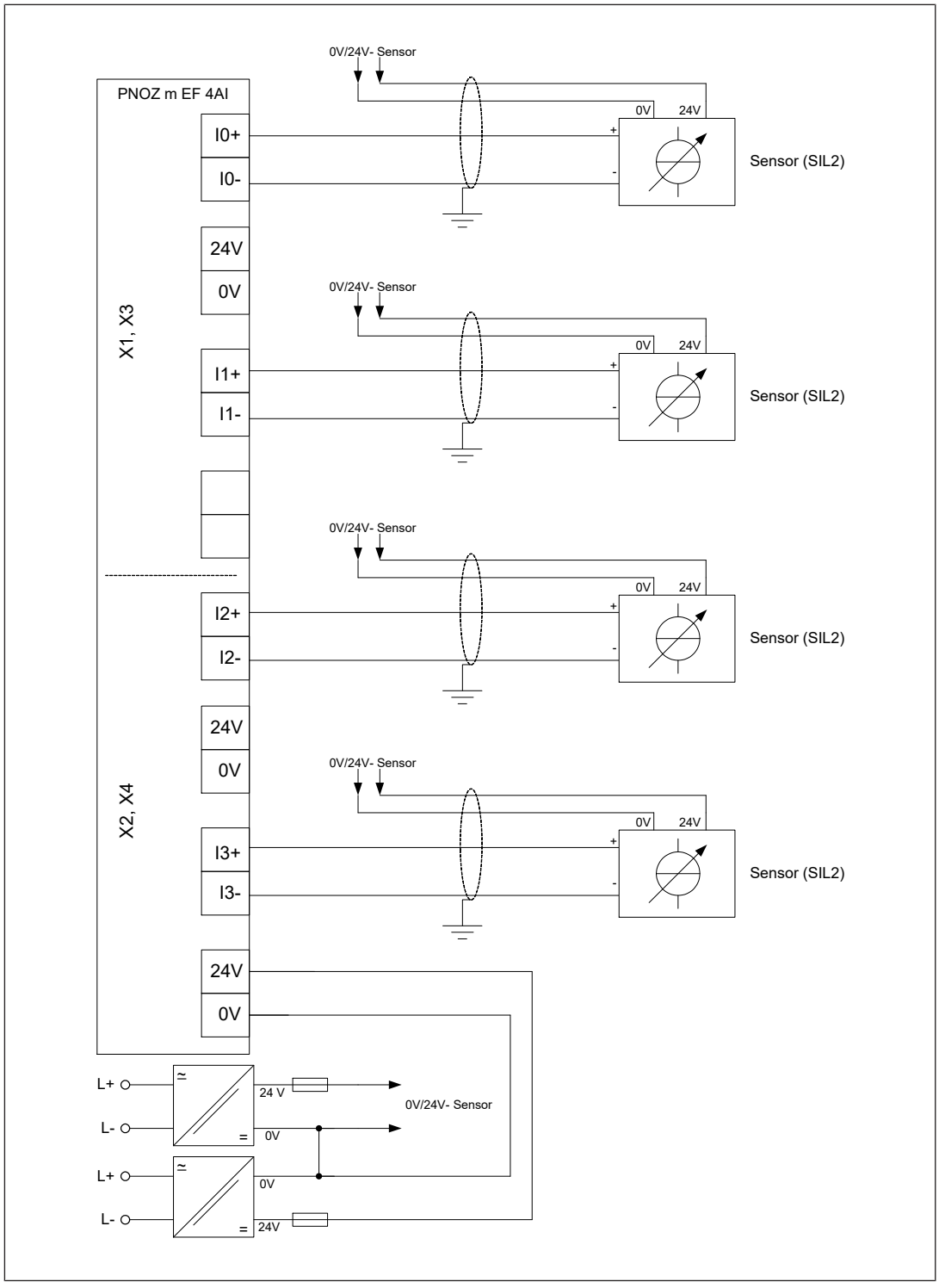

6.3 Download modified project to the PNOZmulti system

As soon as an additional expansion module has been connected to the system, the project must be amended in the PNOZmulti Configurator and downloaded back into the base unit. Proceed as described in the operating manual for the base unit.



NOTICE

For the commissioning and after every user program change, you must check whether the safety devices are functioning correctly.

7 Operation

When the supply voltage is switched on, the PNOZmulti copies the configuration from the chip card.

The PNOZmulti system is ready for operation when the "POWER" and "RUN" LEDs on the base unit are lit continuously.

7.1 LED indicators

Legend

 LED on

 LED flashes

● LED off

Error					
POWER	Run	Diag	Fault	IFault	
●					No supply voltage
					Analogue input module PNOZ m EF 4AI is in the start-up phase.
					Analogue input module PNOZ m EF 4AI is running without error.
					Analogue input module PNOZ m EF 4AI is in stop condition.
					Internal error on the analogue input module PNOZ m EF 4AI or on the overall system. Analogue input module is in a safe condition.
					External error on the analogue input module PNOZ m EF 4AI or on the overall system. The analogue input module is in a safe state.
					The measured current at an analogue input is outside the measuring range.
					The measured current at an analogue input is outside the working range.
					A numerical value is outside the value range of -999.999 … 999.999

Terminal LEDs			Meaning
0 V, 24 V		Green	The analogue input module is started and it is in the start-up phase.
	●		▸ The analogue input module is in stop condition or ▸ The analogue input module is in RUN condition
I0+, I0- … I3+, I3-		Green	The measured current at the relevant analogue input is inside the working range.
			The measured current at the relevant analogue input is outside the working range.
	●		The analogue input is not configured.

8 Technical details

General	
Certifications	**CE, EAC (Eurasian), KOSHA, TÜV, cULus Listed**
Application range	**Failsafe**
Module's device code	**00E6h**
Electrical data	
Supply voltage	
for	**Supply to sensor evaluation**
Voltage	**24 V**
Kind	**DC**
Voltage tolerance	**-20 %/+25 %**
Max. permitted current	**0,25 A**
Max. continuous current that the external power supply must provide	**40 mA**
Output of external power supply (DC) at no load	**1 W**
Potential isolation	**yes**
Supply voltage	
for	**Module supply**
internal	**Via base unit**
Voltage	**24 V**
Kind	**DC**
Current consumption	**30 mA**
Power consumption	**0,7 W**
Max. power dissipation of module	**2 W**
Status indicator	**LED**
Analogue inputs	
Number of analogue inputs	**4**
Type of analogue inputs	**Current**
Measuring ranges	
Type	**Differential input**
Measuring range	**4 .. 20 mA**
Type	**Differential input**
Measuring range	**0 .. 25 mA**
Input filter	**RC filter, 1st order**
Cutoff frequency	**700 Hz**
Current measurement	
Signal range	**0,00 - 25,00 mA**
Resolution	**16 Bit (15 Bit + sign)**
Value of least significant bit (LSB)	**0,78 µA**
Input resistance	**156 Ohm + approx. 1.6 V threshold voltage**
Max. continuous current	**30 mA**
Scan rate	**10 kHz**
Safety-related accuracy (1 input)	**1 %**

Analogue inputs	
Deviations from the measuring range limit value	
Linearity error	**0,05 %**
Output variable error at 25 ℃	**0,3 %**
Temperature coefficient	**0,003 %/K**
Greatest transient deviation during el. interference test	**0,6 %**
Max. measurement error at full temperature range	**0,5 %**
Repetition accuracy at 25 °C	**0,05 %**
Monotony without error codes	**yes**
Data format supplied to application program	**Float**
Conversion method	**Successive approximation**
Potential isolation	**yes**
Environmental data	
Ambient temperature	
In accordance with the standard	**EN 60068-2-14**
Temperature range	**0 - 60 °C**
Forced convection in control cabinet off	**55 °C**
Storage temperature	
In accordance with the standard	**EN 60068-2-1/-2**
Temperature range	**-25 - 70 °C**
Climatic suitability	
In accordance with the standard	**EN 60068-2-30, EN 60068-2-78**
Condensation during operation	**Not permitted**
Max. operating height above sea level	**2000 m**
EMC	**EN 61131-2**
Vibration	
In accordance with the standard	**EN 60068-2-6**
Frequency	**5 - 150 Hz**
Acceleration	**1g**
Shock stress	
In accordance with the standard	**EN 60068-2-27**
Acceleration	**15g**
Duration	**11 ms**
Airgap creepage	
In accordance with the standard	**EN 61131-2**
Overvoltage category	**II**
Pollution degree	**2**
Protection type	
In accordance with the standard	**EN 60529**
Housing	**IP20**
Terminals	**IP20**
Mounting area (e.g. control cabinet)	**IP54**
Potential isolation	
Potential isolation between	**Sensor and system voltage**
Type of potential isolation	**Functional insulation**

Potential isolation	
Rated insulation voltage	**30 V**
Rated surge voltage	**500 V**
Mechanical data	
Mounting position	**horizontally on mounting rail**
DIN rail	
Top hat rail	**35 x 7,5 EN 50022**
Recess width	**27 mm**
Material	
Bottom	**PC**
Front	**PC**
Top	**PC**
Connection type	**Spring-loaded terminal, screw terminal**
Mounting type	**plug-in**
Conductor cross section with screw terminals	
1 core flexible	**0,25 - 2,5 mm², 24 - 12 AWG**
2 core with the same cross section, flexible without crimp connectors or with TWIN crimp connectors	**0,2 - 1,5 mm², 24 - 16 AWG**
Torque setting with screw terminals	**0,5 Nm**
Conductor cross section with spring-loaded terminals: Flexible with/without crimp connector	**0,2 - 2,5 mm², 24 - 12 AWG**
Spring-loaded terminals: Terminal points per connection	**2**
Stripping length with spring-loaded terminals	**9 mm**
Dimensions	
Height	**101,4 mm**
Width	**22,5 mm**
Depth	**120 mm**
Weight	**108 g**

Where standards are undated, the 2018-07 latest editions shall apply.

8.1 Safety characteristic data



NOTICE

You must comply with the safety characteristic data in order to achieve the required safety level for your plant/machine.

Operating mode	EN ISO 13849-1: 2015 PL	EN ISO 13849-1: 2015 Category	EN 62061 SIL CL	EN 62061 PFH_D [1/h]	IEC 61511 SIL	IEC 61511 PFD	EN ISO 13849-1: 2015 T_M [year]
–	PL e	Cat. 4	SIL CL 3	2,32E-10	SIL 3	1,99E-05	20

Explanatory notes for the safety-related characteristic data:

- The SIL CL value in accordance with EN 62061 corresponds to the SIL value in accordance with EN 61508.
- T_M is the maximum mission time in accordance with EN ISO 13849-1. The value also applies as the retest interval in accordance with EN 61508-6 and IEC 61511 and as the proof test interval and mission time in accordance with EN 62061.

All the units used within a safety function must be considered when calculating the safety characteristic data.



INFORMATION

A safety function's SIL/PL values are **not** identical to the SIL/PL values of the units that are used and may be different. We recommend that you use the PAScal software tool to calculate the safety function's SIL/PL values.

9 Order reference

9.1 Product

Product type	Features	Order no.
PNOZ m EF 4AI	Expansion module, 4 analogue inputs	772 160

9.2 Accessories

Connection terminals

Product type	Features	Order No.
Set spring terminals	1 set of spring-loaded terminals	751 004
Set screw terminals	1 set of screw terminals	750 004

Terminator, jumper

Product type	Features	Order no.
PNOZ mm0.xp connector left	Jumper yellow/black to connect the modules, 10 pieces	779 260

Support

Technical support is available from Pilz round the clock.

Americas
Brazil
+55 11 97569-2804
Canada
+1 888 315 7459
Mexico
+52 55 5572 1300
USA (toll-free)
+1 877-PILZUSA (745-9872)

Asia
China
+86 21 60880878-216
Japan
+81 45 471-2281
South Korea
+82 31 778 3300

Australia
+61 3 95600621

Europe
Austria
+43 1 7986263-0
Belgium, Luxembourg
+32 9 3217570
France
+33 3 88104003
Germany
+49 711 3409-444
Ireland
+353 21 4804983
Italy, Malta
+39 0362 1826711
Scandinavia
+45 74436332
Spain
+34 938497433
Switzerland
+41 62 88979-32
The Netherlands
+31 347 320477
Turkey
+90 216 5775552
United Kingdom
+44 1536 462203

You can reach our international hotline on:
+49 711 3409-444
support@pilz.com

Pilz develops environmentally-friendly products using ecological materials and energy-saving technologies. Offices and production facilities are ecologically designed, environmentally-aware and energy-saving. So Pilz offers sustainability, plus the security of using energy-efficient products and environmentally-friendly solutions.

Energy saving by Pilz

BLUECOMPETENCE Alliance Member
Partner of the Engineering Industry Sustainability Initiative

pilz
Partner of:
The Best of German Engineering

DIN EN ISO 9001 REG. NO. 2462

1004650-EN-02, 2019-06 Printed in Germany
© Pilz GmbH & Co. KG, 2019

CECE®, CHRE®, CMSE®, InduraNET p®, Leansafe®, Master of Safety®, Master of Security®, PAS4000®, PAScal®, PASconfig®, Pilz®, PIT®, PLID®, PMCprimo®, PMCprotego®, PMCtendo®, PMD®, PMI®, PNOZ®, PRBT®, PRCM®, Primo®, PRTM®, PSEN®, PSS®, PVIS®, SafetyBUS p®, SafetyEYE®, SafetyNET p®, THE SPIRIT OF SAFETY® are registered and protected trademark of Pilz GmbH & Co. KG in some countries. We would point out that product features may vary from the details stated in this document, depending on the status at the time of publication and the scope of the equipment. We accept no responsibility for the validity, accuracy and entirety of the text and graphics presented in this information. Please contact our Technical Sup if you have any questions.

We are represented internationally. Please refer to our homepage www.pilz.com for further details or contact our headquarters.

Headquarters: Pilz GmbH & Co. KG, Felix-Wankel-Straße 2, 73760 Ostfildern, Germany
Telephone: +49 711 3409-0, Telefax: +49 711 3409-133, E-Mail: info@pilz.com, Internet: www.pilz.com

PILZ
THE SPIRIT OF SAFETY